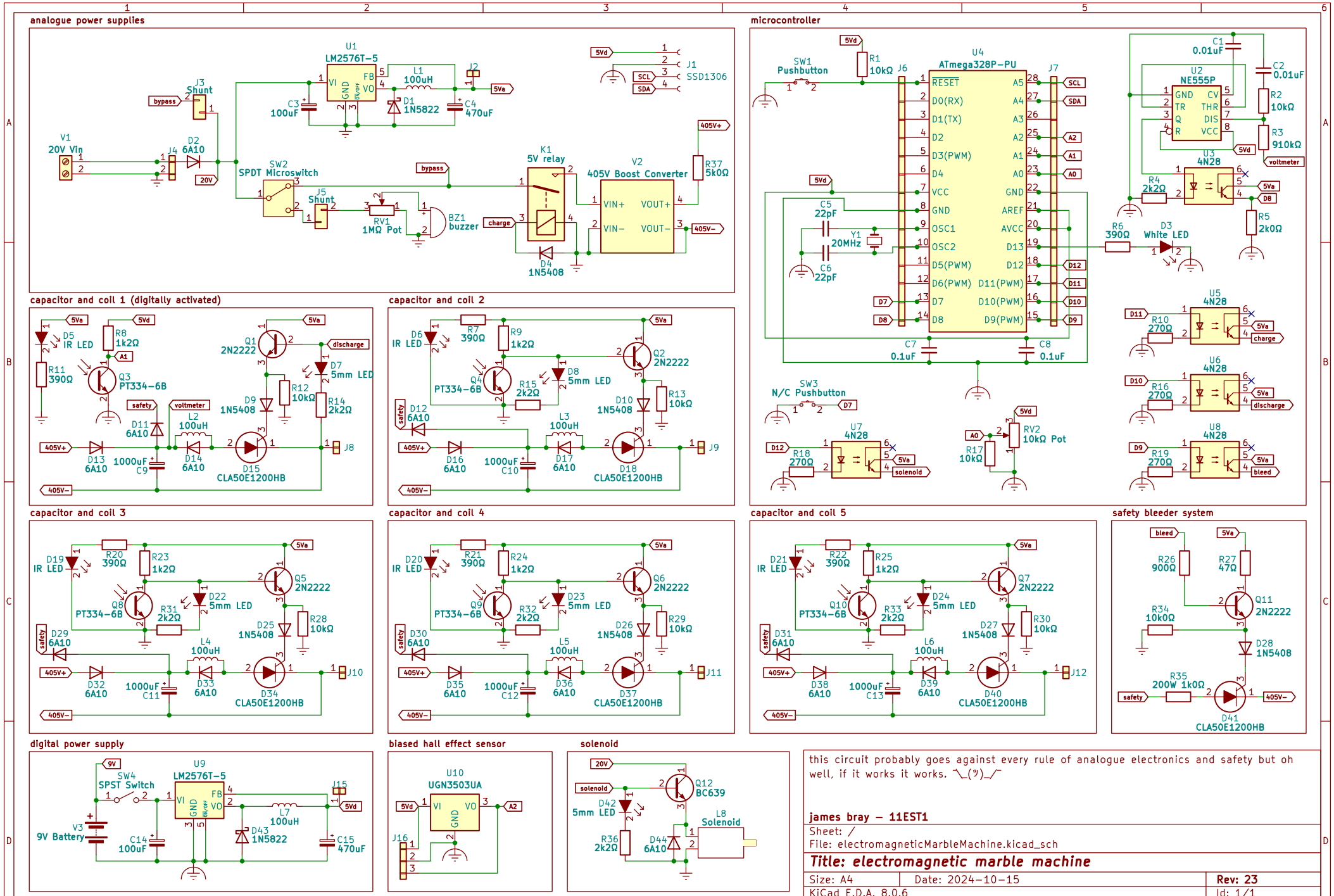

this circuit probably goes against every rule of analogue electronics and safety but oh well, if it works it works. ¯_(ツ)_/¯

james bray – 11EST1

Sheet: /

File: electromagneticMarbleMachine.kicad_sch

Title: electromagnetic marble machine

Size: A4	Date: 2024-10-15	Rev: 23
KiCad E.D.A. 8.0.6		Id: 1/1