JAMES NUVAL, RME

Mechanical Engineer

Top 10 – February 2023 Mechanical Engineering Licensure Examination

Design Portfolio – Selected Engineering Projects

Rizal, Philippines
Email: jamesnuval4@gmail.com
Contact: +63 962 991 1356
Linkedin: https://www.linkedin.com/in/nuval-james-e-389856268

FOR PORTFOLIO REVIEW ONLY

PROJECT 1 – Robot Puncher Safety Fence (Completed & Built)

Designed and completed full 3D modeling and fabrication drawings for a robotic puncher perimeter safety fence system. The project was successfully fabricated and installed on-site.

- Developed full perimeter layout and modular panel system
- Designed hinged and sliding door mechanisms with stopper system
- Generated fabrication-ready 2D technical drawings with dimensions and weld callouts
- Prepared structured Bill of Materials (BOM)
- Validated as-built installation against design specifications

3D CAD MODEL OF SAFETY FENCE

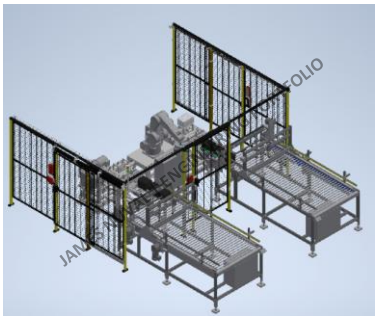

HINGED DOOR

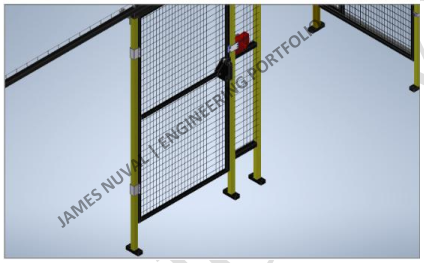

SLIDING DOOR GUIDE AND STOPPER

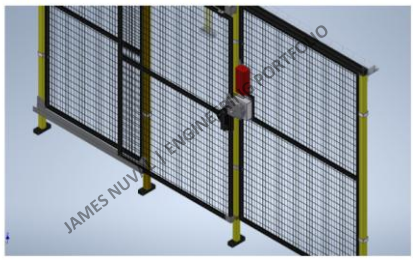

2D TECHNICAL DRAWING MAIN ASSEMBLY

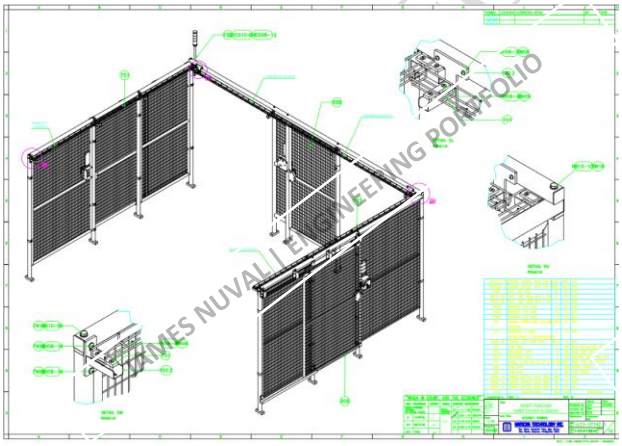

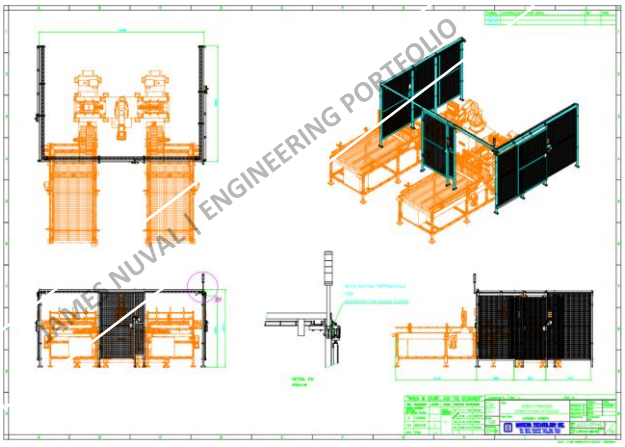

JAMES NUVALI | ENGINEERING PORTFOLIO
PORTFOLIO REVIEW ONLY

STRUCTURED BILL OF MATERIALS (55 out of 127 materials on BOM)

R 01 - A-WET CHARGE/1917A-A0/N/0 - BILL OF MATERIALS/2.1 - MECHANICAL/WP-JL23-OT142

ROBOT PUNCHER		Designed by:	DE-AUTOMATION
PERIMETER FENCE W/ SENSORS		Drawn by:	JEN
		Checked by:	KBA
BILL OF MATERIALS	SET # 1	Approved by:	RCB
		Reference:	Container: File
DCN:			
D-000378	100%	PAMICAN TECHNOLOGY INC.	WBS No: JL23-OT142 Rev:
			Dwg No: A-1917A-A0-0 00

Item No.	PN	Specifications	Qty	Unit	Description	PROCESS REVIEW	MATERIAL DECLARATION
		D000 ASSY					
1	BH08-10	SCREW, BUTTON HEAD M08 X 10	4	PC	STD.		
2	BH08-12	SCREW, BUTTON HEAD M08 X 12	6	PC	STD.		
3	BH08-16	SCREW, BUTTON HEAD M08 X 16	20	PC	STD.		
		D09 ASSY					
4	BH08-16	SCREW, BUTTON HEAD M08 X 16	8	PC	STD.		
		D01.1 ASSY					
5	D01AA	STEEL, SQ TUBE MS 1/8" X 1-1/2" X 1995	4	PC	FENCE STAND		
6	D01B	STEEL, PLATE MS ; 1" X 50 X 125	11	PC	FENCE STAND PLATE		
7	D01C	STEEL, PLATE MS ; 3/8" X 45 X 45	11	PC	FENCE TOP COVER		
8	D01D1	STEEL, SQ TUBE MS 2.5 X 45 X 30 , 3.34 KG/M	18	PC	POST MTG		
9	D01D2	STEEL, PLATE MS ; 3/8" X 25 X 25	2	PC	PANEL THREADED MTG PLATE		
10	HB08-16	BOLT, HEX HEAD M08 X 16	4	PC	STD.		
		D01.2 ASSY					
11	HB08-16	BOLT, HEX HEAD M08 X 16	4	PC	STD.		
		D01.3 ASSY					
12	HB08-16	BOLT, HEX HEAD M08 X 16	4	PC	STD.		
13	D01AB	STEEL, SQ TUBE MS 1/8" X 1-1/2" X 1995	4	PC	FENCE STAND		
14	D01D3	STEEL, PLATE MS 3/16" X 45 X 135	2	PC	STOPPER PLATE		
15	D01D4	STEEL, SQ TUBE MS 2.5 X 45 X 30 , 3.34 KG/M	2	PC	STOPPER MTG.		
		D01.4 ASSY					
16	HB08-16	BOLT, HEX HEAD M08 X 16	6	PC	STD.		
		D02 ASSY					
17	D02A	STEEL, SQ TUBE MS 3.2 X 25 X 1725, 2.19 KG/ M	2	PC	FENCE B1		
18	D02B	STEEL, SQ TUBE MS (BARE) 3.2 X 25 X 1107, 2.19 KG/ M	4	PC	FENCE B2		
19	D02C	STEEL, SQ TUBE MS 3.2 X 25 X 1085, 2.19 KG/ M	2	PC	FENCE B3		
20	D02D	WIRE MESH ; WIRE DIAMETER = Ø3, MESH = 1" X 2", SIZE = 850 X 1085 (INTERCON-AGRO)	4	PC	FENCE B4		
21	D02E	STEEL, SQ TUBE MS 3.2 X 25 X 1725, 2.19 KG/ M	4	PC	FENCE B10		
22	D02F1	STEEL, SQ TUBE MS (BARE) 3.2 X 25 X 160, 2.19 KG/M	2	PC	FRAME MTG 1		
23	D02F2	STEEL, SQ TUBE MS (BARE) 3.2 X 25 X 100, 2.19 KG/M	2	PC	FRAME MTG 2		
		D03 ASSY					
24	D03A	STEEL, SQ TUBE MS (BARE) 3.2 X 25 X 853, 2.19 KG/ M	2	PC	FENCE B6		
25	D03B	STEEL, SQ TUBE MS 3.2 X 25 X 1725, 2.19 KG/ M	2	PC	FENCE B7		
26	D03C	STEEL, SQ TUBE MS (BARE) 3.2 X 25 X 903, 2.19 KG/ M	4	PC	FENCE B8		
27	D03D	WIRE MESH ; WIRE DIAMETER = Ø3, MESH = 1" X 2", SIZE = 850 X 903 (INTERCON-AGRO)	4	PC	WIRE MESH		
		D04 ASSY					
28	BH05-10	SCREW, BUTTON HEAD M05 X 10	4	PC	STD.		
29	BH06-12	SCREW, BUTTON HEAD M06 X 12	4	PC	STD.		
30	BH06-16	SCREW, BUTTON HEAD M06 X 16	4	PC	STD.		
		D04A ASSY					
31	D04AA	STEEL, SQ TUBE MS (BARE) 3.2 X 25 X 1630, 2.19 KG/ M	4	PC	PANEL SUPPORT 2		
32	D04AB	STEEL, SQ TUBE MS 3.2 X 25 X 1050, 2.19 KG/ M	2	PC	PANEL SUPPORT 1		
33	D04AC	STEEL, SQ TUBE MS (BARE) 3.2 X 25 X 1045, 2.19 KG/ M	2	PC	PANEL SUPPORT 4		
34	D04AD	STEEL, SQ TUBE MS 3.2 X 25 X 1000, 2.19 KG/ M	2	PC	PANEL SUPPORT 3		
35	D04AE	WIRE MESH ; WIRE DIAMETER = Ø3, MESH = 1" X 2", SIZE = 805 X 1020(INTERCON-AGRO)	4	PC	WIRE MESH		
36	D04B	STEEL, PLATE MS ; 3/16" X 175 X 275	3	PC	DOOR HANDLE MTG		
37	D04C	STEEL, PLATE MS ; 30 X 30 X 30	8	PC	DOOR HANDLE STOPPER		
38	D04D	STEEL, PLATE MS ; 3/16" X 45 X 90	4	PC	ROLLER TRACK MTG		
39	D04E	STEEL, PLATE MS ; 3/8" X 25 X 95	2	PC	INTERLOCK PIN MTG FOR SLIDING		
40	D04F	STEEL, PLATE MS ; 5/8" X 25 X 50	2	PC	STOPPER BLOCK		
41	D04G	STEEL, PLATE MS ; 3/16" X 25 X 40	2	PC	STOPPER PLATE		
42	FW05	WASHER, FLAT M05	4	PC.	STD.		
43	FW06	WASHER, FLAT M06	8	PC.	STD.		
44	FW08	WASHER, FLAT M08	2	PC.	STD.		
45	HN08	NUT, HEX M08	4	PC.	STD.		
46	SHCS08-40	SCREW, SOCKET HEAD CAP M08 x 40	2	PC.	STD.		
47	SHCS08-55	SCREW, SOCKET HEAD CAP M08 x 55	4	PC.	STD.		
48	D05	STEEL,SHEET MS; 1/16" X 225 X 275	2	PC	HORIZONTAL INTERLOCKER MTG 1		
		D06 ASSY					
49	D06A	STEEL, SQ TUBE MS 1.9" X 1.9" X 3000	2	PC	FENCE SUPPORT B		
50	D06B	STEEL, PLATE MS ; 3 X 45 X 45	8	PC	FENCE SUPPORT COVER		
		D07 ASSY					
51	D07A	STEEL, PLATE MS ; 1/4" X 75 X 105	4	PC	GUIDE MTG PLATE		
52	D07B	STEEL, SHEET MS ; 2 X 120 X 1010	2	PC	C-GUIDE		
53	FW06	WASHER, FLAT M06	14	PC.	STD.		
54	FW08	WASHER, FLAT M08	32	PC.	STD.		
55	FW10	WASHER, FLAT M10	12	PC.	STD.		

AS-BUILT GATE INSTALLATION

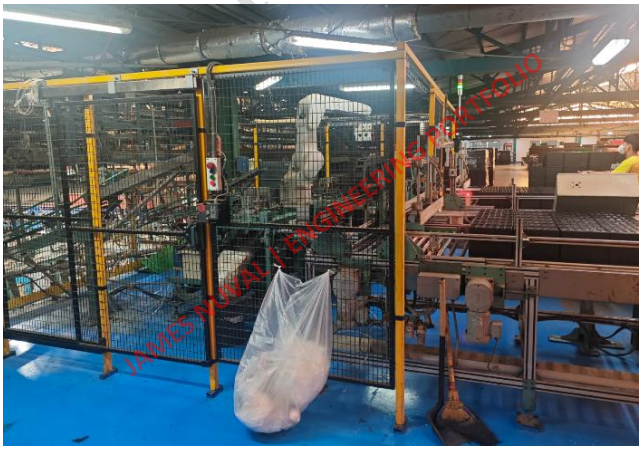

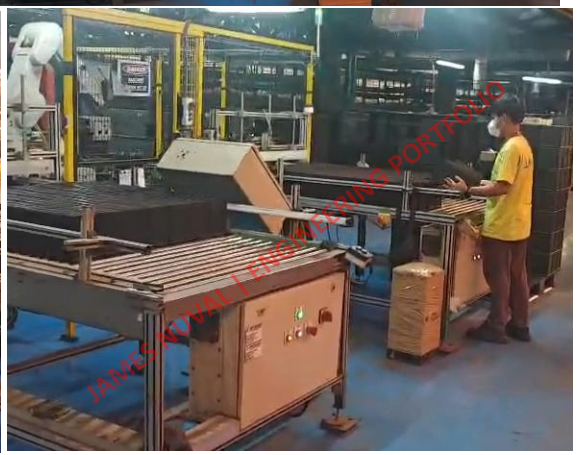

JAMES NUVALI | ENGINEERING PORTFOLIO
FOR REVIEW ONLY

PROJECT 2 – Servo Post Builder Benchmarking & Feasibility Study

Conducted evaluation and benchmarking of a purchased post builder machine used in lead-acid battery manufacturing. Analyzed servo motor integration feasibility, head assembly travel limits, and linear guide mounting configuration to support potential process improvement and equipment optimization.

- Evaluated head assembly configuration of acquired equipment
- Simulated minimum and maximum head travel positions
- Analyzed ballscrew length limitations and motion range
- Assessed feasibility of servo motor integration for positioning control
- Proposed linear guide mounting layout for improved positioning accuracy
- Identified mechanical constraints prior to potential modification

3D CAD MODEL of POST BUILDER HEAD

Note: Conveyor and battery models are reference geometry and not part of the design scope

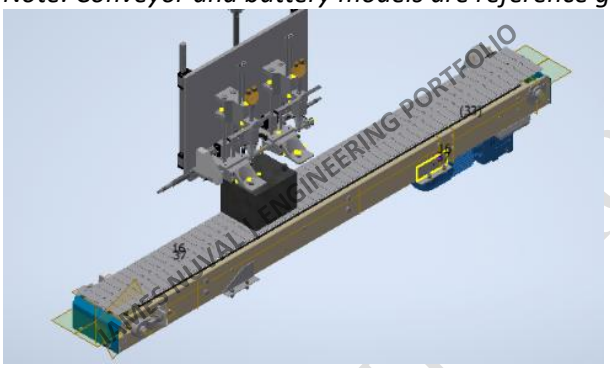
JAMES NUVAL | ENGINEERING PORTFOLIO

JAMES NUVAL | ENGINEERING PORTFOLIO

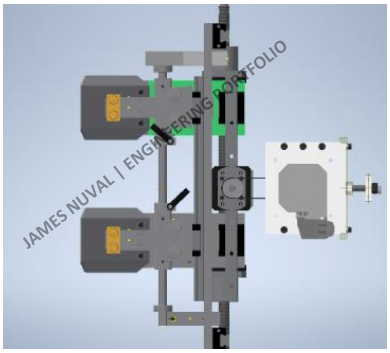
JAMES NUVAL | ENGINEERING PORTFOLIO

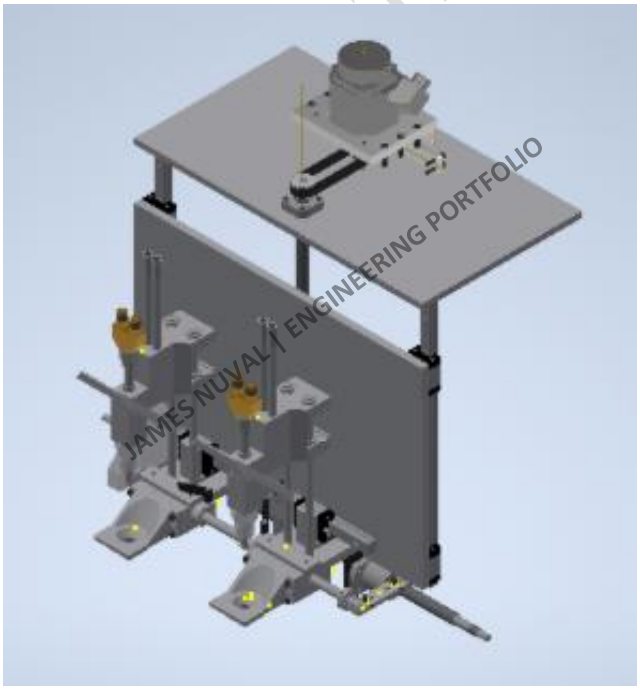
JAMES NUVAL | ENGINEERING PORTFOLIO

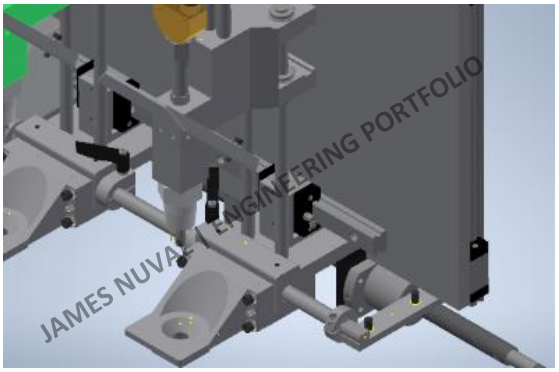
JAMES NUVAL | ENGINEERING PORTFOLIO

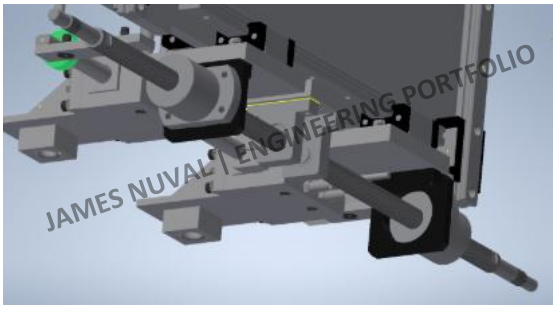
JAMES NUVAL | ENGINEERING PORTFOLIO

PORTFOLIO VIEW ONLY

PROJECT 3 – Sliding Conveyor Revision & Engineering Option Study (Hot Pandesal Line)

The purpose of the project was to revise and simulate the inclined belt conveyor layout due to the relocation of the overhead conveyor. Performed layout simulation and design adjustment. Developed two engineering options with comparative analysis of inclination angle and length impact.

Options	Adjustment	Pros	Cons
Option A	• Add 915 mm conveyor length • Maintain 24° inclination angle	Maintains standard inclination and material flow performance	Requires additional conveyor length
Option B	• 300MM CUT-OUT LENGTH OF SLIDING CONVEYOR • Reduce inclination angle from 24° to 20°	No additional conveyor length needed	Reduced angle may affect material flow

Option A was selected to maintain the proven 24° inclination standard and ensure reliable material flow following conveyor relocation.

SIMULATION VIA 3D CAD AND ACTUAL EXECUTION

BEFORE

AFTER

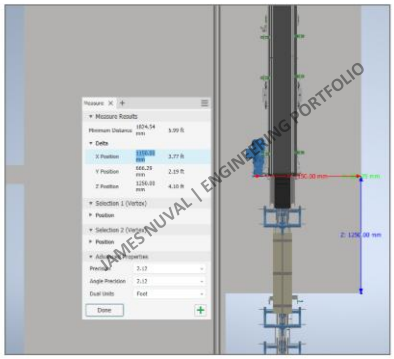

CUTTING AND ADDITIONAL LENGTH LAYOUT

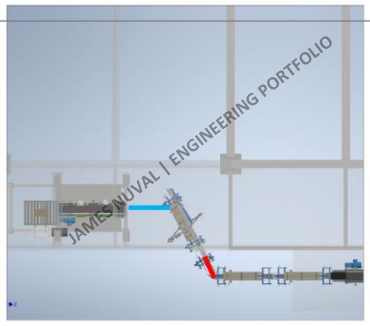

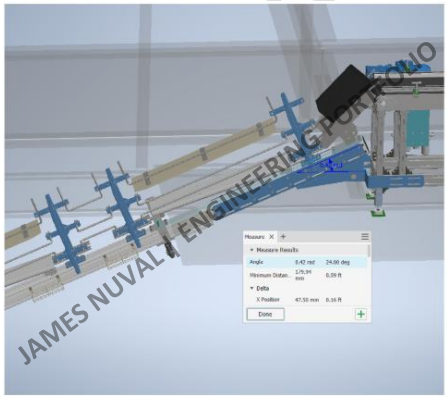

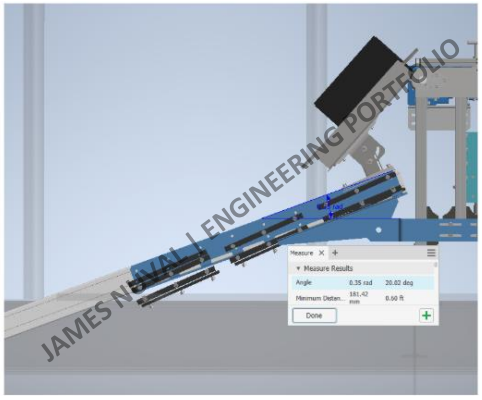

JAMES NUVAL | ENGINEERING PORTFOLIO
FOR REVIEW ONLY