PARTS LIST			
ITEM	QTY	PART NUMBER	DESCRIPTION
1	4	450712010040016	Socket Cap Screw - Standard - (A2) - M4 x 16
2	4	450712010040025	Socket Cap Screw - Standard - (A2) - M4 x 25
3	2	BSM.001.103	Top_Angle Bracket
4	2	BSM.001.132	Top_Separator Backboard 2 Lanes
5	2	BSM.001.136	Top_Separator Lever
7	3	BSM.001.138	Top_Separator Pipe
8	1	BSM.001.139	Top_Separator Shaft
9	2	BSM.001.140	Top_Separator Weight 2
10	1	BSM.001.141	Top_Separator Weight
11	2	BSM.004.102	Pancake_Bearing
12	2	circlip-6-bs-3673	External Circlip
13	6	M3 x 8 - Socket Cap Screw - Standard (A2)	Socket Cap Screw - Standard - (A2) - M3 x 8
14	14	M4 - Nyloc Nut	Nyloc Nut - M4
15	6	M4 x 16 - Socket Csk Screw (A2)	Socket Csk Screw - (A2) - M4 x 16

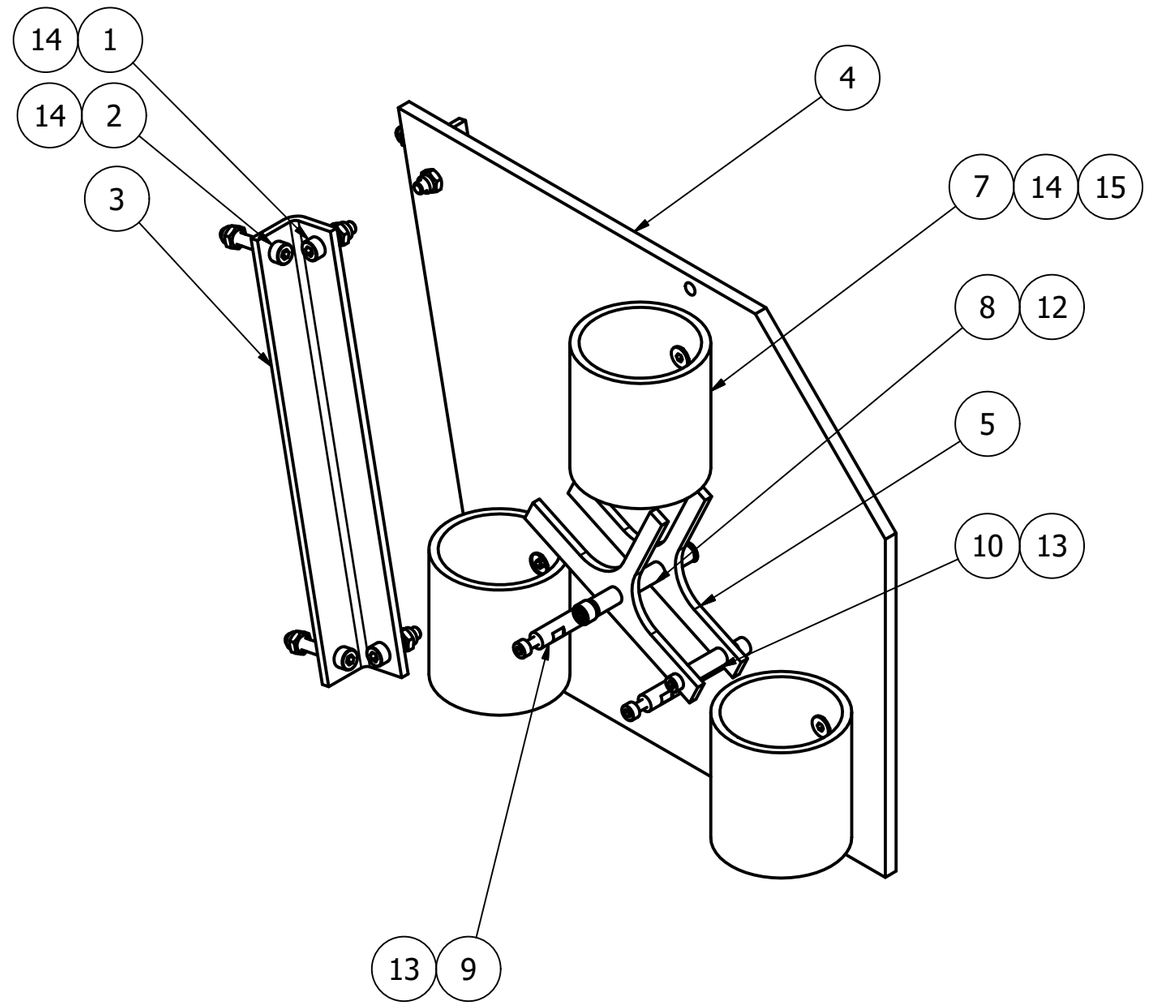

Second "Top_Separator Backboard 2 Lanes" removed for clarity

Material:		Quantity					
DO NOT SCALE: IF IN DOUBT, PLEASE ASK.		TOLERANCES UNLESS OTHERWISE STATED: LINEAR ±±0.15 ANGULAR± ±3°					
ALL DIMS. IN MM SCALE: 1 : 2	Contact Details:	Designed by JT	Checked by	Approved by Date 24.03.19	Sheet size A3	Date 24-Mar-19	PROJECT
THIRD ANGLE PROJECTION	© UNIVERSITY OF BATH THIS DOCUMENT IS COPYRIGHT AND THE PROPERTY OF THE UNIVERSITY OF BATH. IT MUST NOT BE COPIED IN WHOLE OR IN PART NOR DISCLOSED TO ANY THIRD PARTY WITHOUT PRIOR PERMISION OF THE UNIVERSITY	Department of Mechanical Engineering	UNIVERSITY OF BATH	TITLE: Top_Separator Assy 2 Lanes			
				PART No. BSM.001.004	Edition 1	Sheet 1 / 1	