ALL OVER

No ENGRAVE PART NUMBER
and REVISION NUMBER
2.5 - 3mm HEIGHT

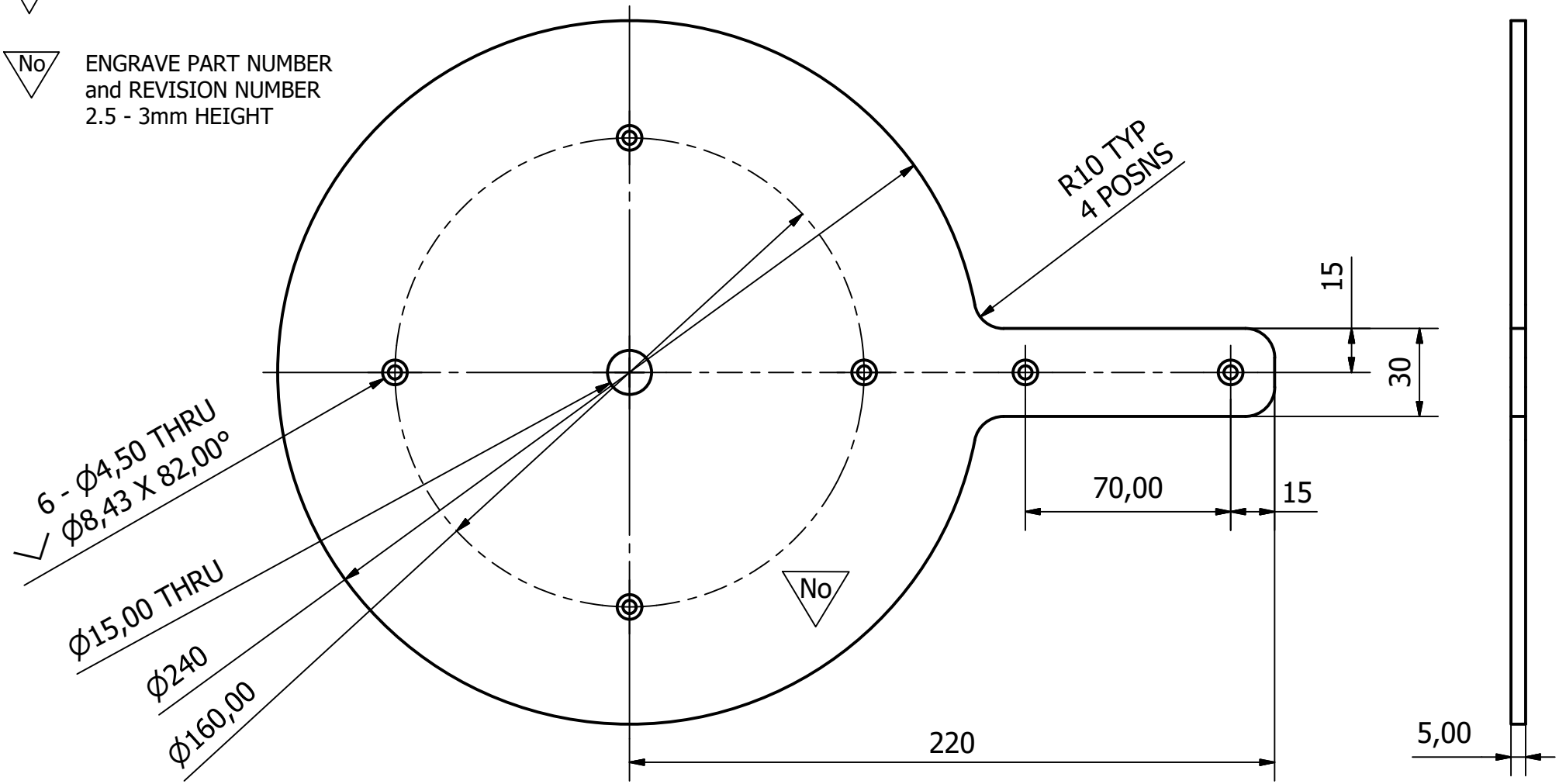

Material:	MDF	Quantity					
DO NOT SCALE: IF IN DOUBT, PLEASE ASK.		TOLERANCES UNLESS OTHERWISE STATED: LINEAR ±±0.15			ANGULAR± ±3°		SF <1.6μm
ALL DIMS. IN MM SCALE: 1 : 2	Contact Details:	Designed by JT	Checked by	Approved by Date 07.03.19	Sheet size A4	Date 07-Mar-19	PROJECT

THIRD ANGLE PROJECTION

© UNIVERSITY OF BATH
THIS DOCUMENT IS COPYRIGHT AND THE PROPERTY OF THE UNIVERSITY OF BATH. IT MUST NOT BE COPIED IN WHOLE OR IN PART NOR DISCLOSED TO ANY THIRD PARTY WITHOUT PRIOR PERMISION OF THE UNIVERSITY

Department of Mechanical Engineering

UNIVERSITY OF BATH

TITLE:	Top_Lever Side		
PART No. BSM.001.125		Edition 1	Sheet 1 / 1