ALL OVER

No LABEL

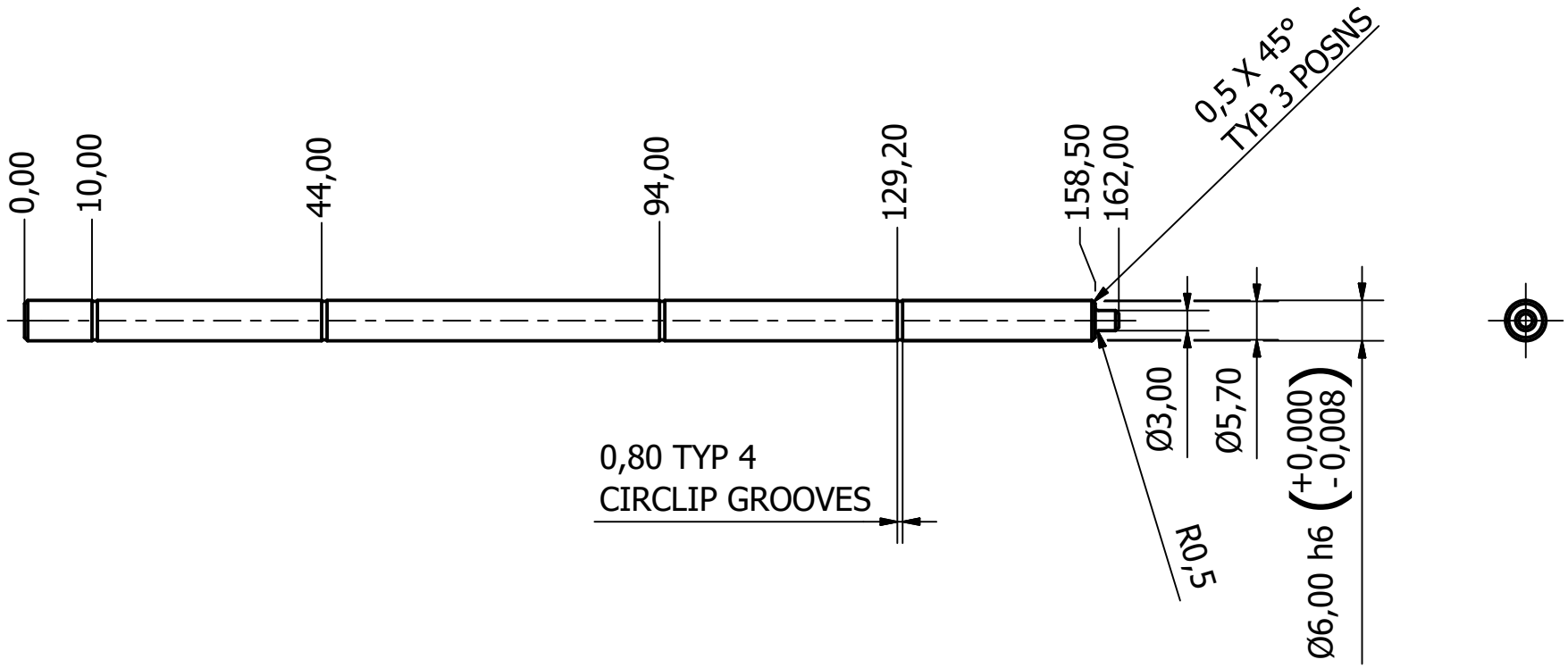

Material:	Stainless Steel 304	Quantity					
DO NOT SCALE: IF IN DOUBT, PLEASE ASK.		TOLERANCES UNLESS OTHERWISE STATED: LINEAR ±±0.15			ANGULAR± ±3°		SF <1.6µm
ALL DIMS. IN MM SCALE: 1 : 1	Contact Details:	Designed by JT	Checked by	Approved by Date 19.02.19	Sheet size A4	Date 19-Feb-19	PROJECT

THIRD ANGLE PROJECTION

© UNIVERSITY OF BATH
THIS DOCUMENT IS COPYRIGHT AND THE PROPERTY OF THE UNIVERSITY OF BATH. IT MUST NOT BE COPIED IN WHOLE OR IN PART NOR DISCLOSED TO ANY THIRD PARTY WITHOUT PRIOR PERMISION OF THE UNIVERSITY

Department of Mechanical Engineering

UNIVERSITY OF BATH

TITLE: Timing_Star Shaft 2 Lanes

PART No.	Edition	Sheet
BSM.007.106	1	1 / 1