| PARTS LIST | | | |
|---|---|---|---|
| ITEM | QTY | PART NUMBER | DESCRIPTION |
| 1 | 10 | 45071201004001 6 | Socket Cap Screw - Standard - (A2) - M4 x 16 |
| 2 | 2 | BSM.004.101 | Pancake_Angle Bracket |
| 3 | 2 | BSM.004.103 | Pancake_Bracket |
| 4 | 4 | BSM.004.124 | Pancake_PVC Pipe 2 |
| 5 | 1 | BSM.011.012 | Pancake_Timing Assy_Lever Shaft 2_4 Lanes |
| 6 | 1 | BSM.011.014 | Pancake_Timing Assy_Star Shaft 2_4 Lanes |
| 7 | 1 | BSM.011.143 | Pancake_Timing Backboard 2_4 Lanes |
| 8 | 2 | FWSRS-D12-V4.5-E2.5-T3 | Countersunk Clamp Washer |
| 9 | 20 | M4 - Nyloc Nut | Nyloc Nut - M4 |
| 10 | 10 | M4 x 16 - Socket Csk Screw (A2) | Socket Csk Screw - (A2) - M4 x 16 |

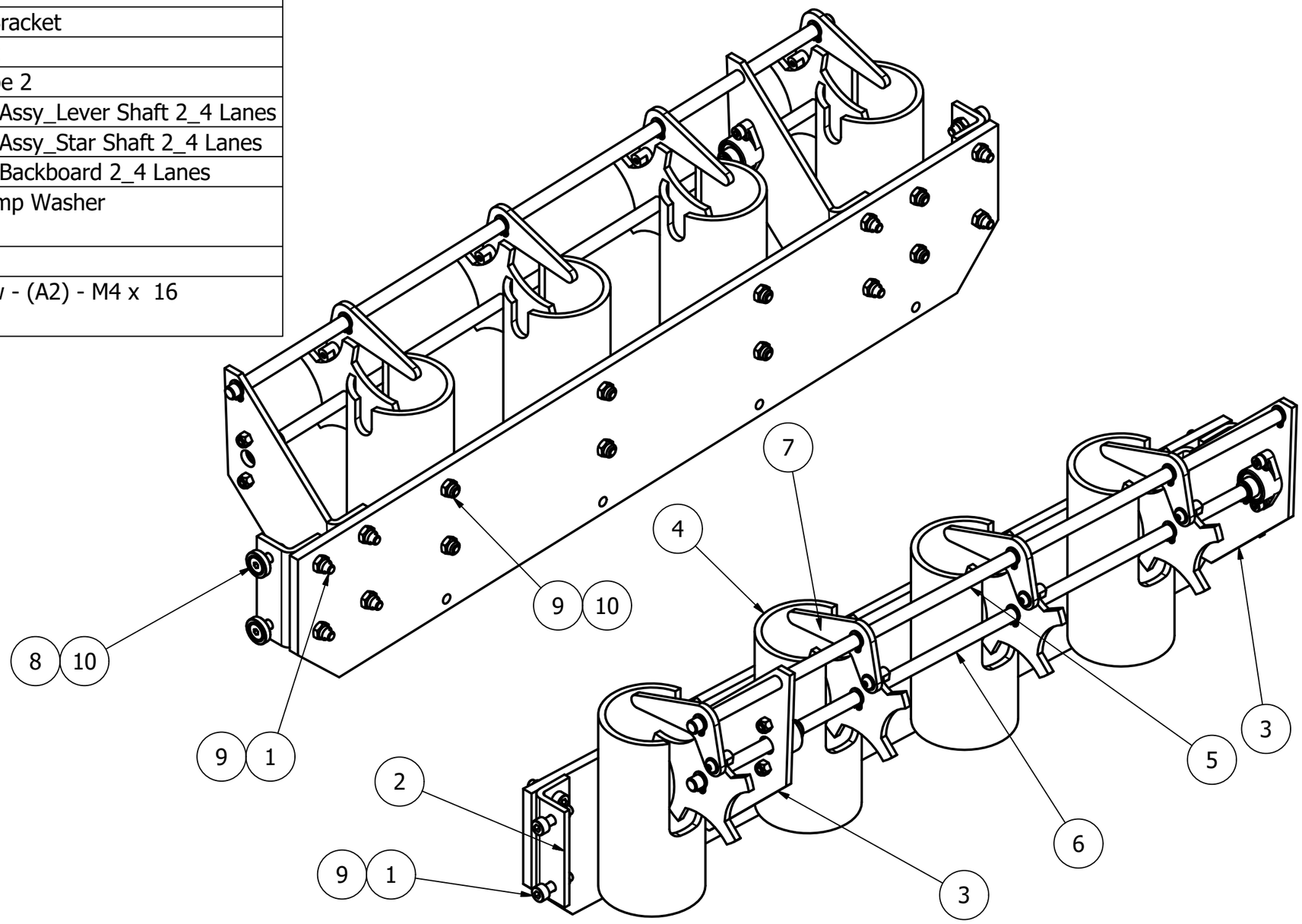


| | | | | | | |
|---|---|---|---|---|---|---|
| Material: | | Quantity | | | | |
| DO NOT SCALE: IF IN DOUBT, PLEASE ASK. | | TOLERANCES UNLESS OTHERWISE STATED: LINEAR ±±0.15 ANGULAR± ±3° | | | | |
| ALL DIMS. IN MM SCALE: 1 : 2 | Contact Details: | Designed by JT | Checked by | Approved by Date 07.03.19 | Sheet size A3 | Date 07-Mar-19 | PROJECT |

THIRD ANGLE PROJECTION

© UNIVERSITY OF BATH
THIS DOCUMENT IS COPYRIGHT AND THE PROPERTY OF THE UNIVERSITY OF BATH. IT MUST NOT BE COPIED IN WHOLE OR IN PART NOR DISCLOSED TO ANY THIRD PARTY WITHOUT PRIOR PERMISION OF THE UNIVERSITY

Department of Mechanical Engineering

UNIVERSITY OF BATH

TITLE: Pancake_Timing Assy 2_4 Lanes

| PART No. | Edition | Sheet |
|---|---|---|
| BSM.011.010 | 1 | 1 / 1 |