View: Bottom

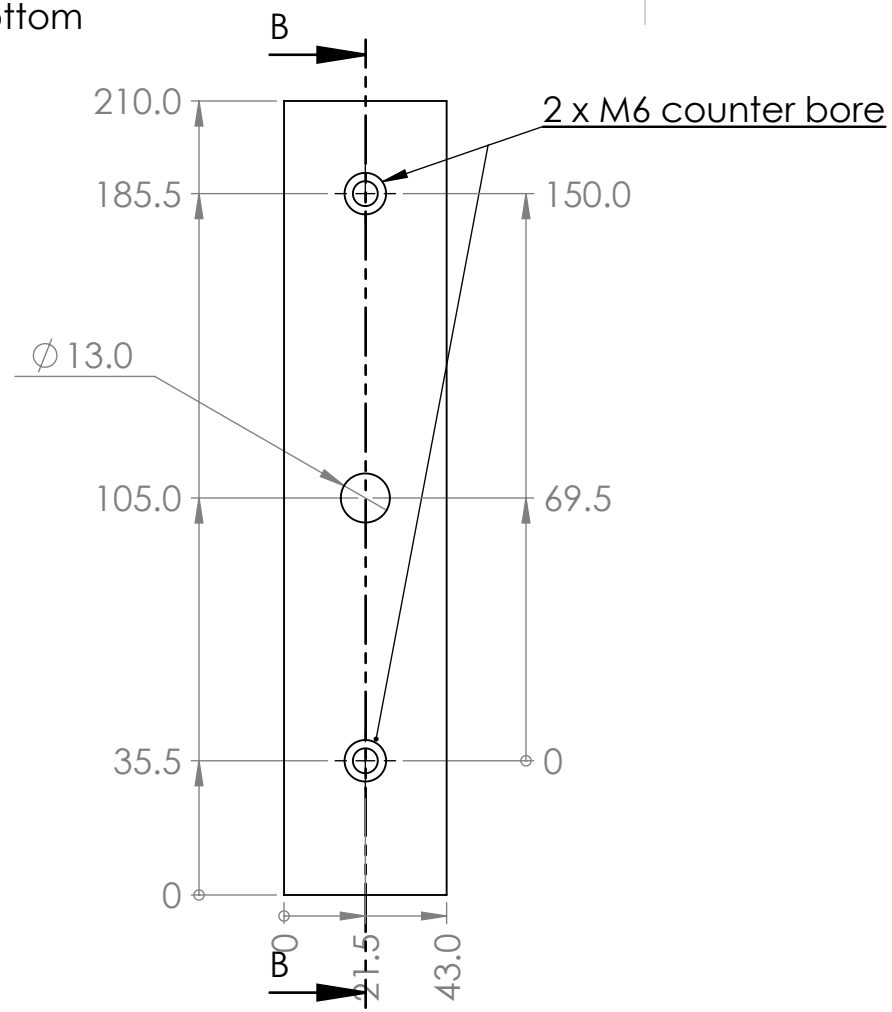

View: Side on cross-section

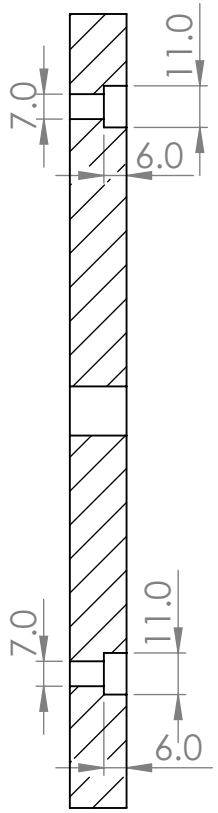

SECTION B-B

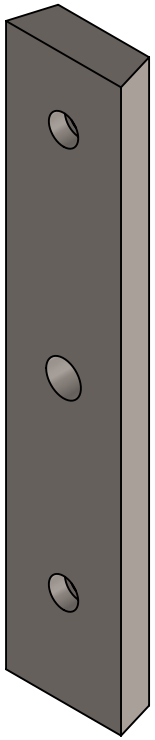

UNLESS OTHERWISE SPECIFIED: DIMENSIONS ARE IN MILLIMETERS SURFACE FINISH: TOLERANCES: LINEAR: 0.5 mm ANGULAR:	FINISH:	DEBUR AND BREAK SHARP EDGES	DO NOT SCALE DRAWING / REVISION Quantity needed: 1

	NAME	SIGNATURE	DATE
DRAWN	Nem Jovanovic		
CHK'D			
APPV'D			
MFG			
Q.A			

TITLE:

Panoptes
Dovetail rail

MATERIAL: Aluminum

DWG NO. Pan001

A4

WEIGHT:

SCALE:1:2

SHEET 1 OF 1