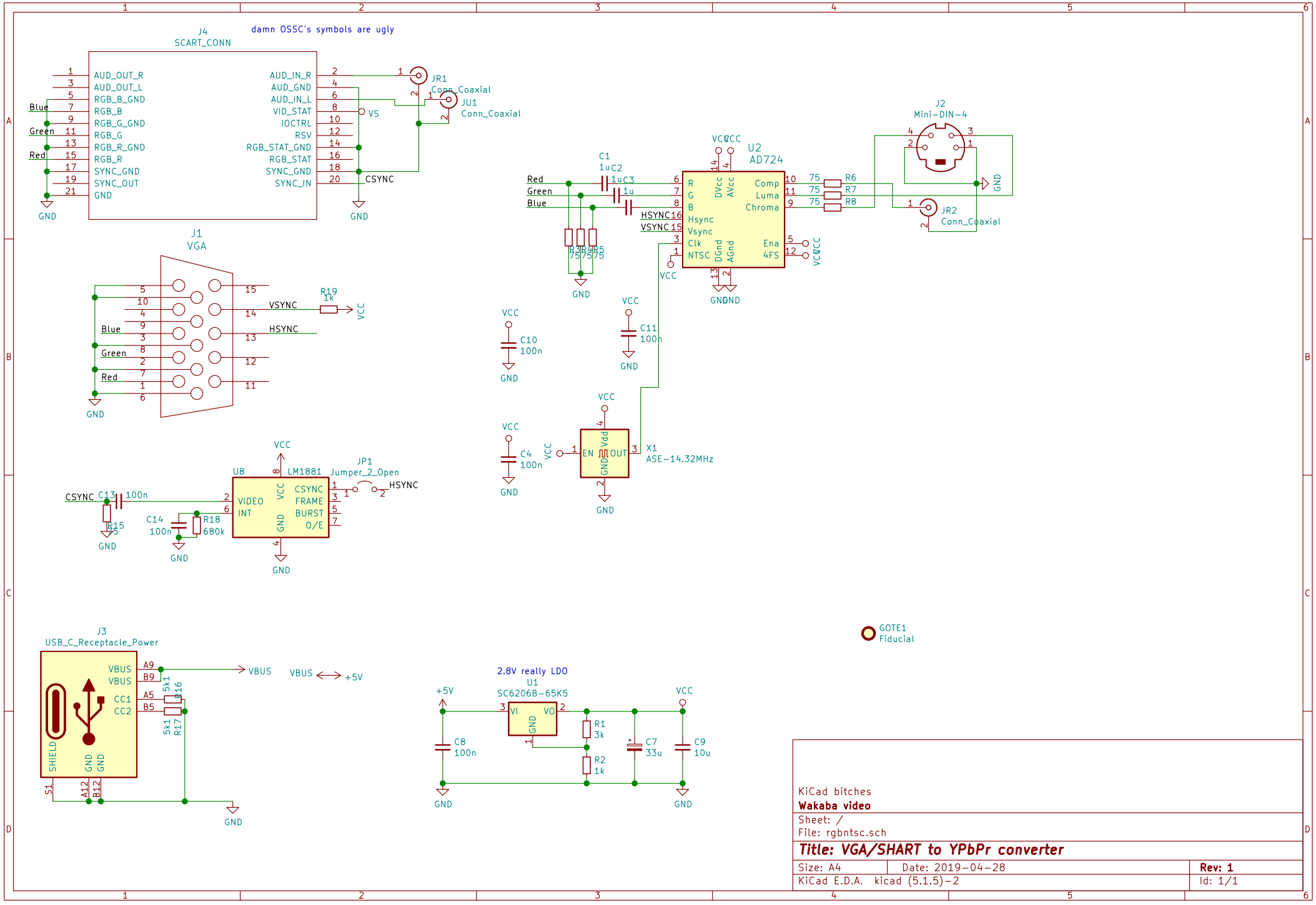
damn OSSC's symbols are ugly
J4
SCART_CONN
AUD_OUT_R
AUD_OUT_L
RGB_B_GND
RGB_B
RGB_G_GND
RGB_G
RGB_R_GND
RGB_R
SYNC_GND
SYNC_OUT
GND
AUD_IN_R
AUD_GND
AUD_IN_L
VID_STAT
IOCTRL
RSV
RGB_STAT_GND
RGB_STAT
SYNC_GND
SYNC_IN
VS
CSYNC
Blue
Green
Red
JR1
Conn_Coaxial
JU1
Conn_Coaxial
J1
VGA
VSYNC
HSYNC
R19
1k
VCC
U2
AD724
R
G
B
Hsync
Vsync
Clk
NTSC
DVcc
AVcc
DGnd
AGnd
Comp
Luma
Chroma
Ena
4FS
C1
1u
C2
1u
C3
1u
R3
75
R4
75
R5
75
R6
75
R7
75
R8
75
J2
Mini-DIN-4
JR2
Conn_Coaxial
C10
100n
C11
100n
C4
100n
X1
ASE-14.32MHz
EN
OUT
Vdd
U8
LM1881
VIDEO
INT
CSYNC
FRAME
BURST
O/E
JP1
Jumper_2_Open
C13
100n
R15
C14
100n
R18
680k
J3
USB_C_Receptacle_Power
VBUS
CC1
CC2
SHIELD
S1
A9
B9
A5
B5
A12
B12
5k1
R16
5k1
R17
VBUS ⟷ +5V
2.8V really LDO
U1
SC6206B-65K5
VI
VO
+5V
C8
100n
R1
3k
R2
1k
C7
33u
C9
10u
GOTE1
Fiducial
KiCad bitches
Wakaba video
Sheet: /
File: rgbntsc.sch
Title: VGA/SHART to YPbPr converter
Size: A4
Date: 2019-04-28
Rev: 1
KiCad E.D.A. kicad (5.1.5)-2
Id: 1/1