CIRCUIT :

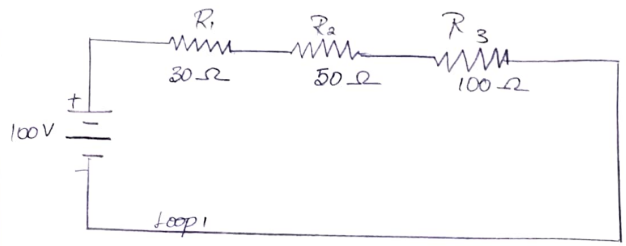

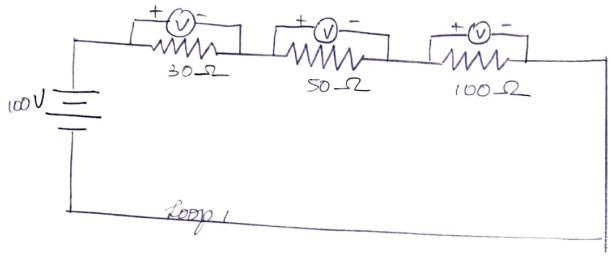

TABULATION

KVL	Source (V)	$V_{30\Omega}$ (V)	$V_{50\Omega}$ (V)	$V_{100\Omega}$ (V)	$V_{30\Omega} + V_{50\Omega} + V_{100\Omega}$
theoritical	100	16.68V	27.8V	55.6 V	100.05
Practical	100	16.7V	27.8V	55.6V	100.1

Ex. 01

VERIFICATION OF KIRCHOFF'S VOLTAGE LAW AND KIRCHOFF'S CURRENT LAW.

AIM:

To verify Kirchoff's voltage law for loop 1 and Kirchoff's current law in node A for the following circuit.

APPARATUS REQUIRED:

Laptop with Proteus software.

THEORY:

According to Kirchoff's voltage law sum of potential raises are equal to sum of potential drop in a loop.

In loop 1 By KVL;

$$V = V_1 + V_2 + V_3 \quad (1)$$

$$100 = IR_1 + IR_2 + IR_3$$

$$R_{eq} = R_1 + R_2 + R_3$$

$$R_{eq} = 30 + 50 + 100$$

$$R_{eq} = 180\ \Omega$$

$$I = \frac{V}{R_{eq}} = \frac{100}{180} = 0.556\ A$$

$$V_1 = V_{30\Omega} = IR_1 = 0.556 \times 30 = 16.68V$$

$$V_2 = V_{50\Omega} = IR_2 = 0.556 \times 50 = 27.8\ V$$

$$V_3 = V_{100\Omega} = IR_3 = 0.556 \times 100 = 55.6\ V$$

CIRCUIT:

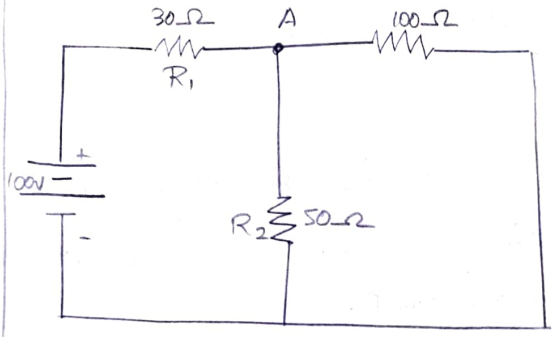

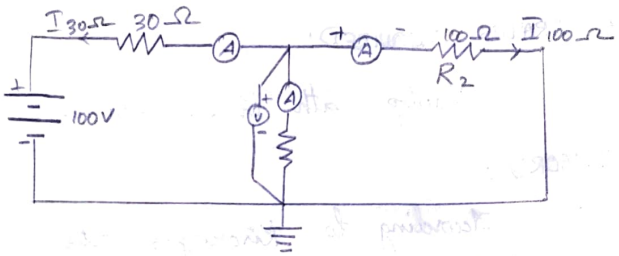

TABULATION:

KCL	$I_{30\Omega}$	$I_{50\Omega}$	$I_{100\Omega}$	VA
Theorical	-1.48A	1.85A	0.56 A	52.63 V
Practical	1.58A	1.05A	0.53 A	52.6 V

Substitute V_1, V_2 and V_3 values in ①.

$$100 = 16.68 + 27.8 + 55.6$$

$$100V = 100V$$

Hence Proved.

KIRCHOFF's CURRENT LAW:

In a junction, incoming current is equal to outgoing current

At anode A,

$$I_{30\Omega} + I_{50\Omega} + I_{100\Omega} = 0$$

$$\frac{V-100}{30} + \frac{V}{50} + \frac{V}{100} = 0$$

$$V\left[\frac{1}{30} + \frac{1}{50} + \frac{1}{100}\right] - \frac{100}{30} = 0$$

$$V[0.0633] - 3.333 = 0$$

$$V = \frac{3.333}{0.0633}$$

$$V = 52.63V$$

$$I_{30\Omega} = \frac{V-100}{30} = \frac{52.63-100}{30} = -1.58A$$

$$I_{50\Omega} = \frac{V}{50} = \frac{52.63}{50} = 1.05A$$

$$I_{100\Omega} = \frac{V}{100} = \frac{52.63}{100} = 0.53A$$

At node A:

$$I_{30\Omega} + I_{50\Omega} + I_{100\Omega} = 0$$

$$-1.58 + 1.05 + 0.58 = 0$$

∴ Hence Proved.

RESULT:

Thus the Kirchoff's Voltage law and Kirchoff's current law has been verified successfully.