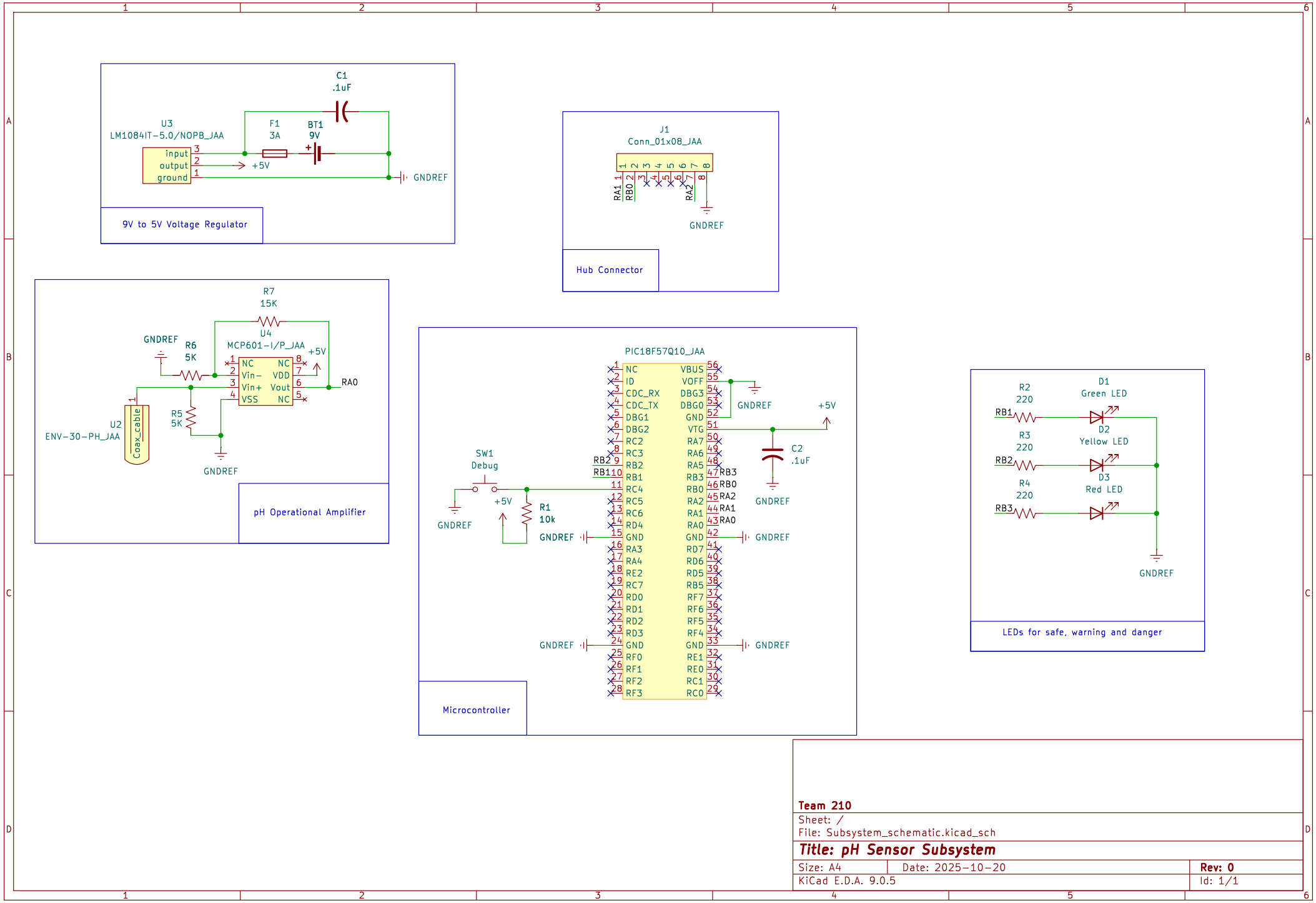

Team 210

Sheet: /

File: Subsystem_schematic.kicad_sch

Title: pH Sensor Subsystem

Size: A4	Date: 2025-10-20	**Rev: 0**
KiCad E.D.A. 9.0.5		Id: 1/1