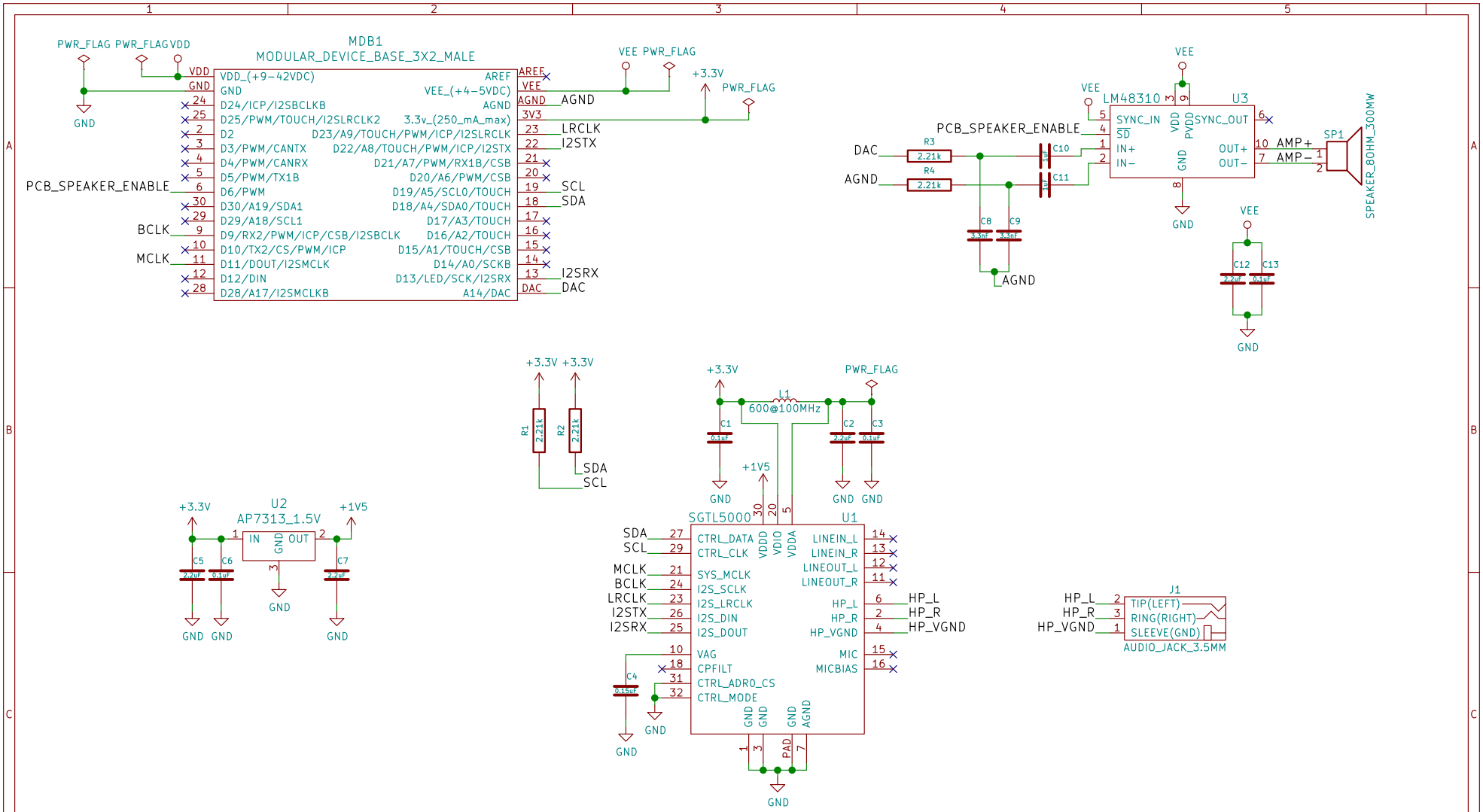

Janelia

Sheet: /

File: audio_controller_3x2.sch

Title: audio_controller_3x2

Size: A	Date:	**Rev: 1.2**
KiCad E.D.A. kicad no-vcs-found-72d488960ubuntu16.04.1		Id: 1/1