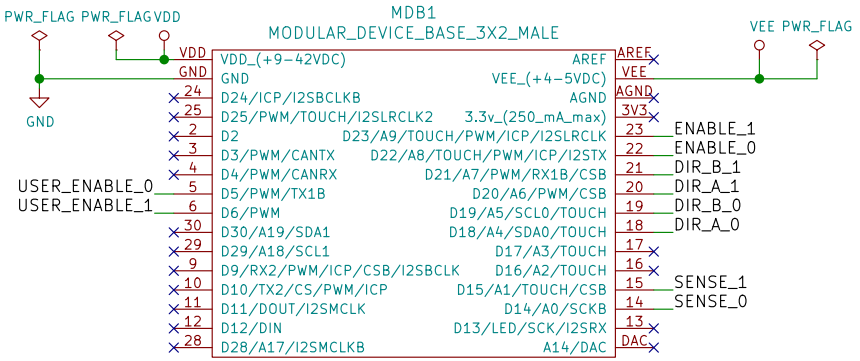

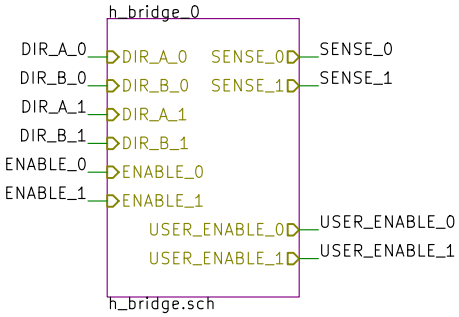

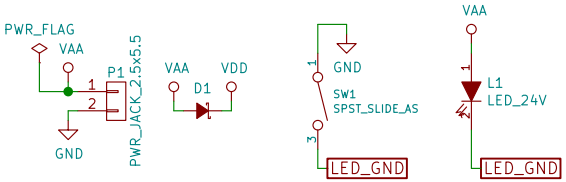

Janelia

Sheet: /

File: h_bridge_controller_3x2.sch

Title: h_bridge_controller_3x2

Size: A	Date:	**Rev: 1.0**
KiCad E.D.A. kicad no-vcs-found-622353458ubuntu16.04.1		Id: 1/2

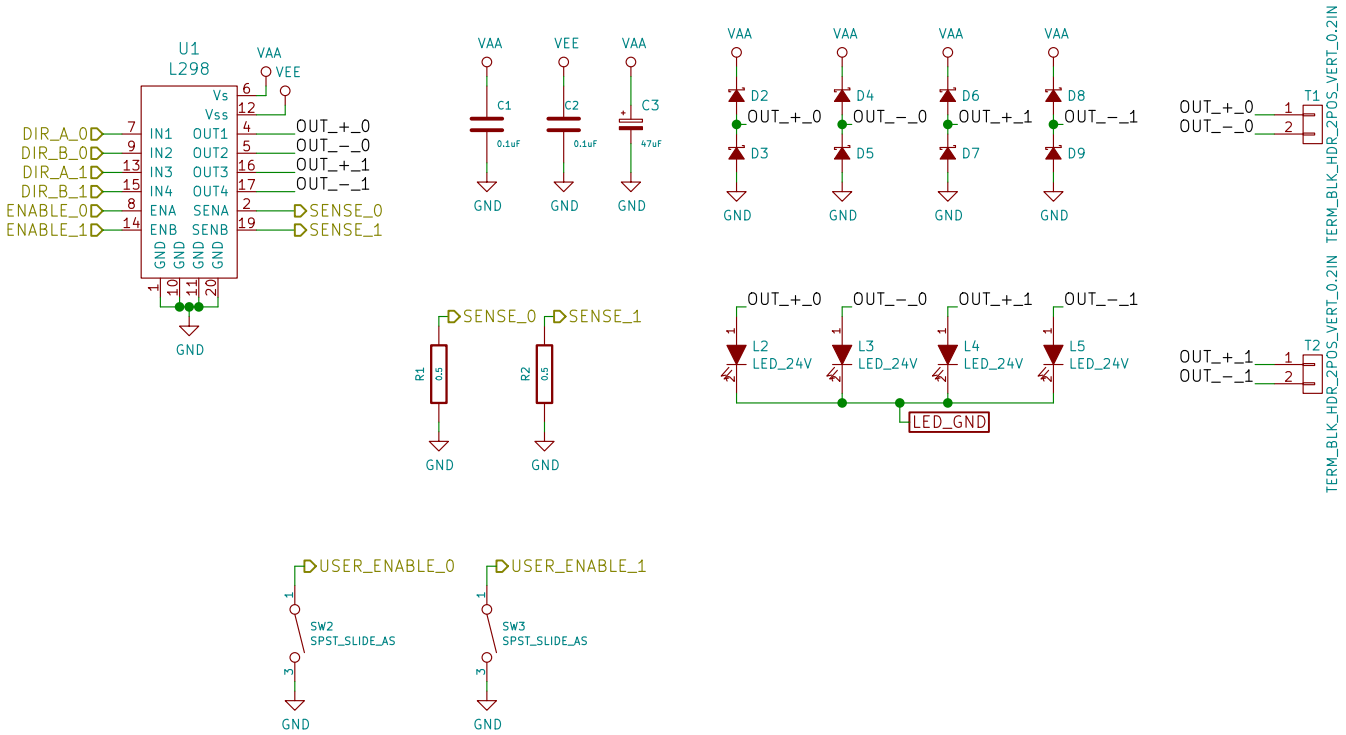

Sheet: /h_bridge_0/
File: h_bridge.sch

Title:

Size: A4	Date:	**Rev:**
KiCad E.D.A. kicad no-vcs-found-622353458ubuntu16.04.1		Id: 2/2