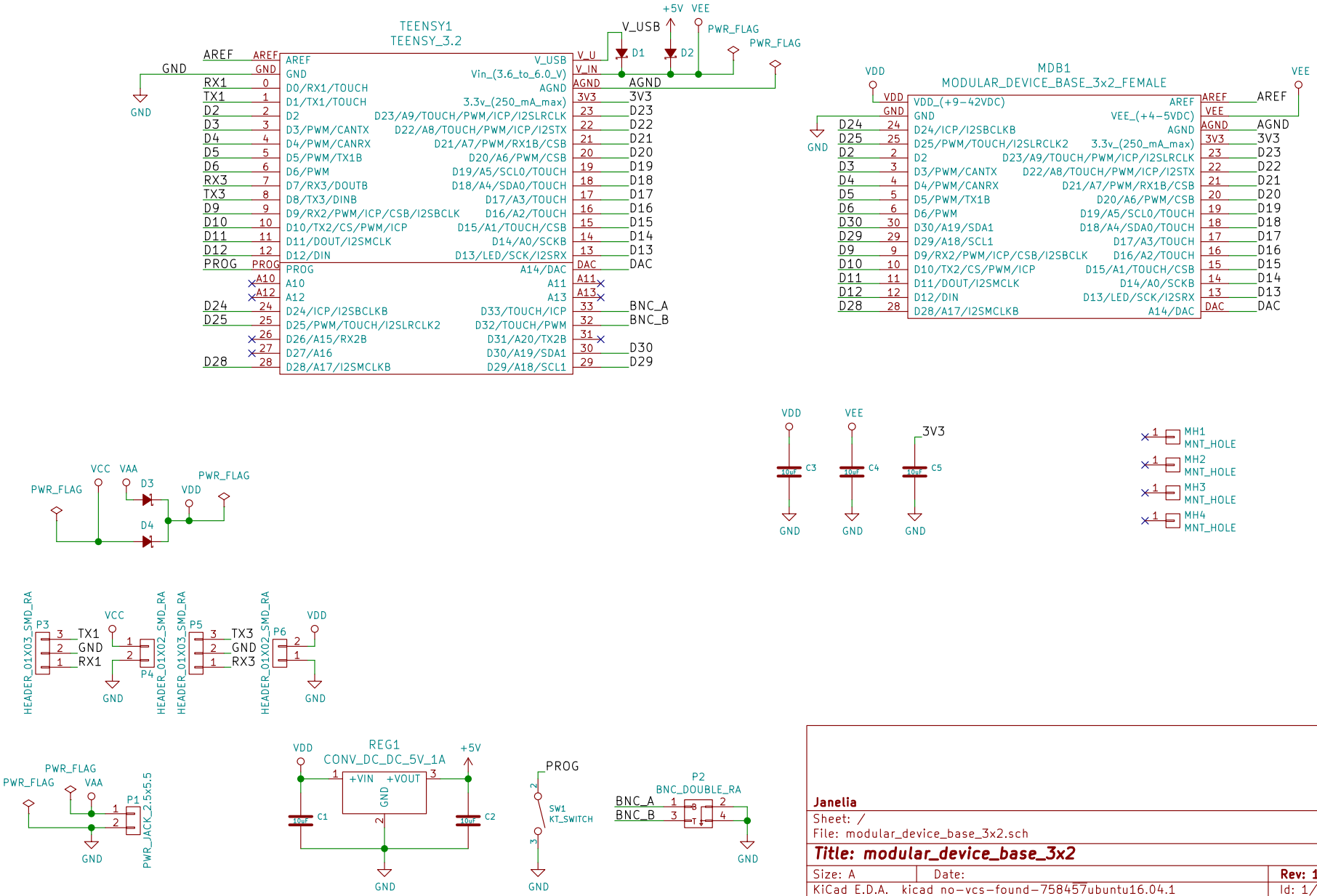

Janelia

Sheet: /

File: modular_device_base_3x2.sch

Title: modular_device_base_3x2

Size: A	Date:	Rev: 1.2
KiCad E.D.A. kicad no-vcs-found-758457ubuntu16.04.1		Id: 1/1