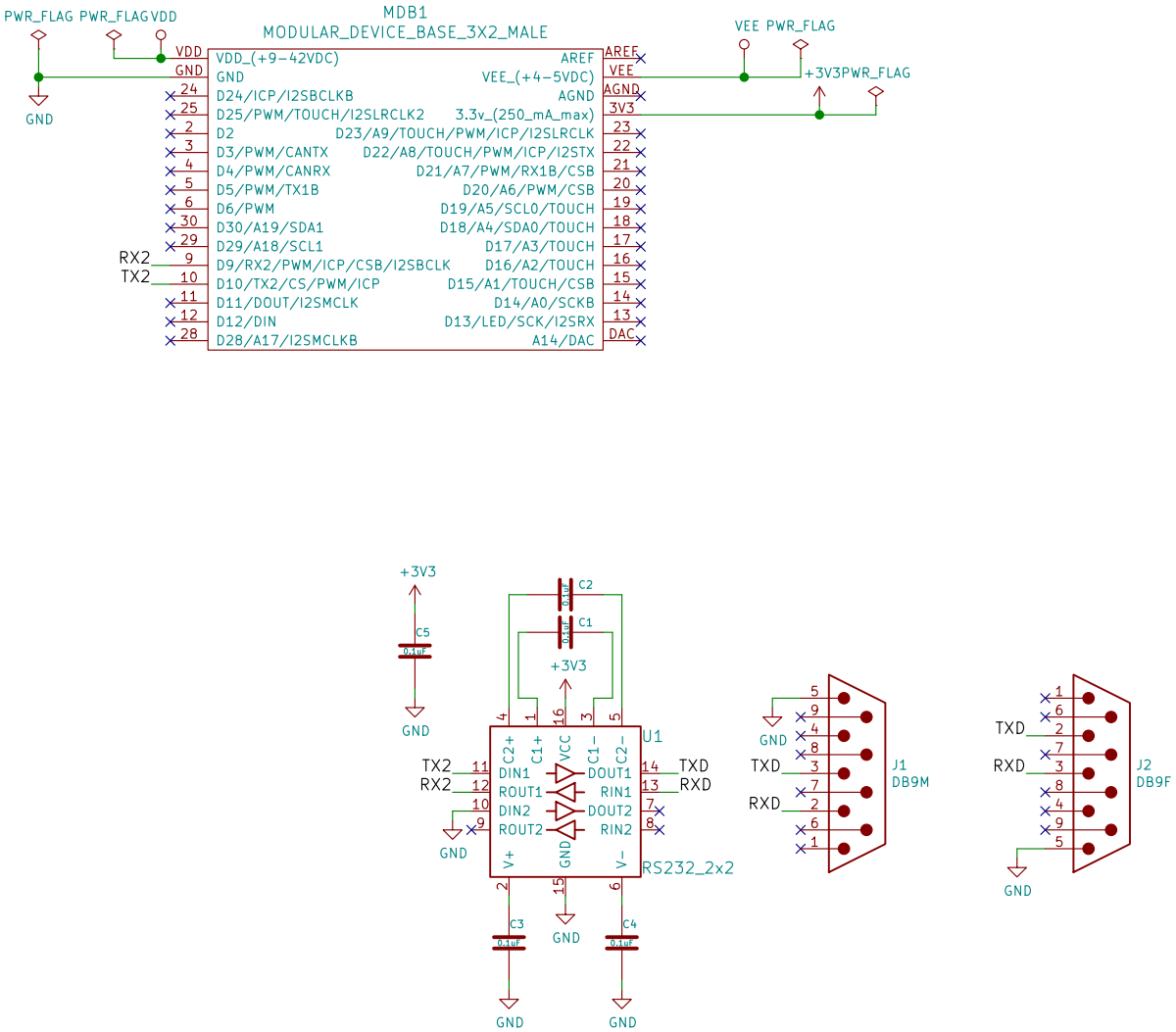

Janelia

Sheet: /

File: rs232_interface_3x2.sch

Title: rs232_interface_3x2

Size: A	Date:	**Rev: 1.0**
KiCad E.D.A. kicad no-vcs-found-66b654f60ubuntu16.04.1		Id: 1/1