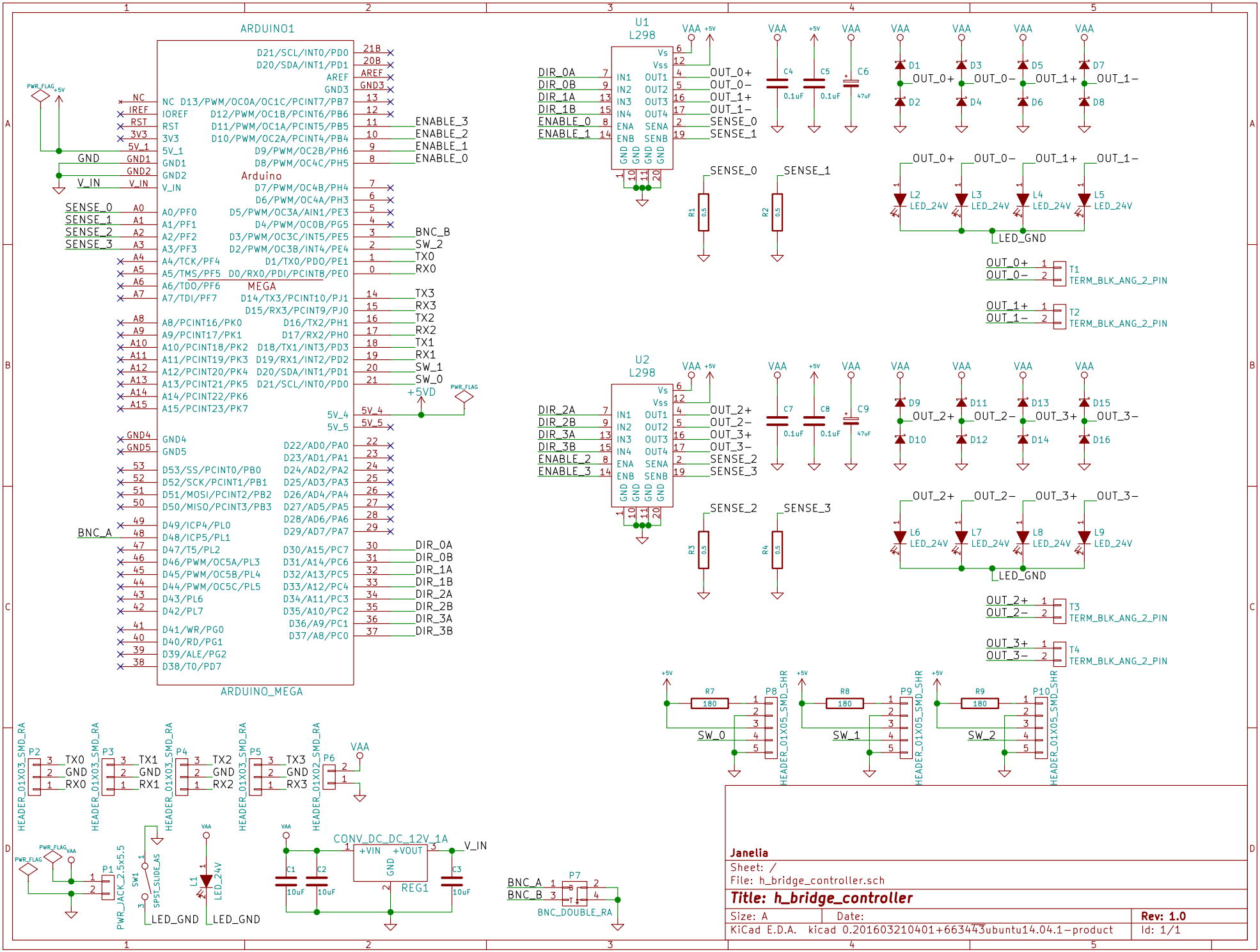
ARDUINO1
ARDUINO_MEGA
Arduino
MEGA
U1
L298
U2
L298
VAA
+5V
PWR_FLAG
GND
V_IN
SENSE_0
SENSE_1
SENSE_2
SENSE_3
BNC_A
BNC_B
SW_2
TX0
RX0
TX3
RX3
TX2
RX2
TX1
RX1
SW_1
SW_0
+5VD
ENABLE_3
ENABLE_2
ENABLE_1
ENABLE_0
DIR_0A
DIR_0B
DIR_1A
DIR_1B
DIR_2A
DIR_2B
DIR_3A
DIR_3B
OUT_0+
OUT_0−
OUT_1+
OUT_1−
OUT_2+
OUT_2−
OUT_3+
OUT_3−
LED_GND
T1
TERM_BLK_ANG_2_PIN
T2
T3
T4
HEADER_01X03_SMD_RA
HEADER_01X02_SMD_RA
HEADER_01X05_SMD_SHR
PWR_JACK_2.5x5.5
SPST_SLIDE_AS
LED_24V
CONV_DC_DC_12V_1A
REG1
BNC_DOUBLE_RA
Janelia
Sheet: /
File: h_bridge_controller.sch
Title: h_bridge_controller
Size: A
Date:
Rev: 1.0
KiCad E.D.A. kicad 0.201603210401+663443ubuntu14.04.1−product
Id: 1/1