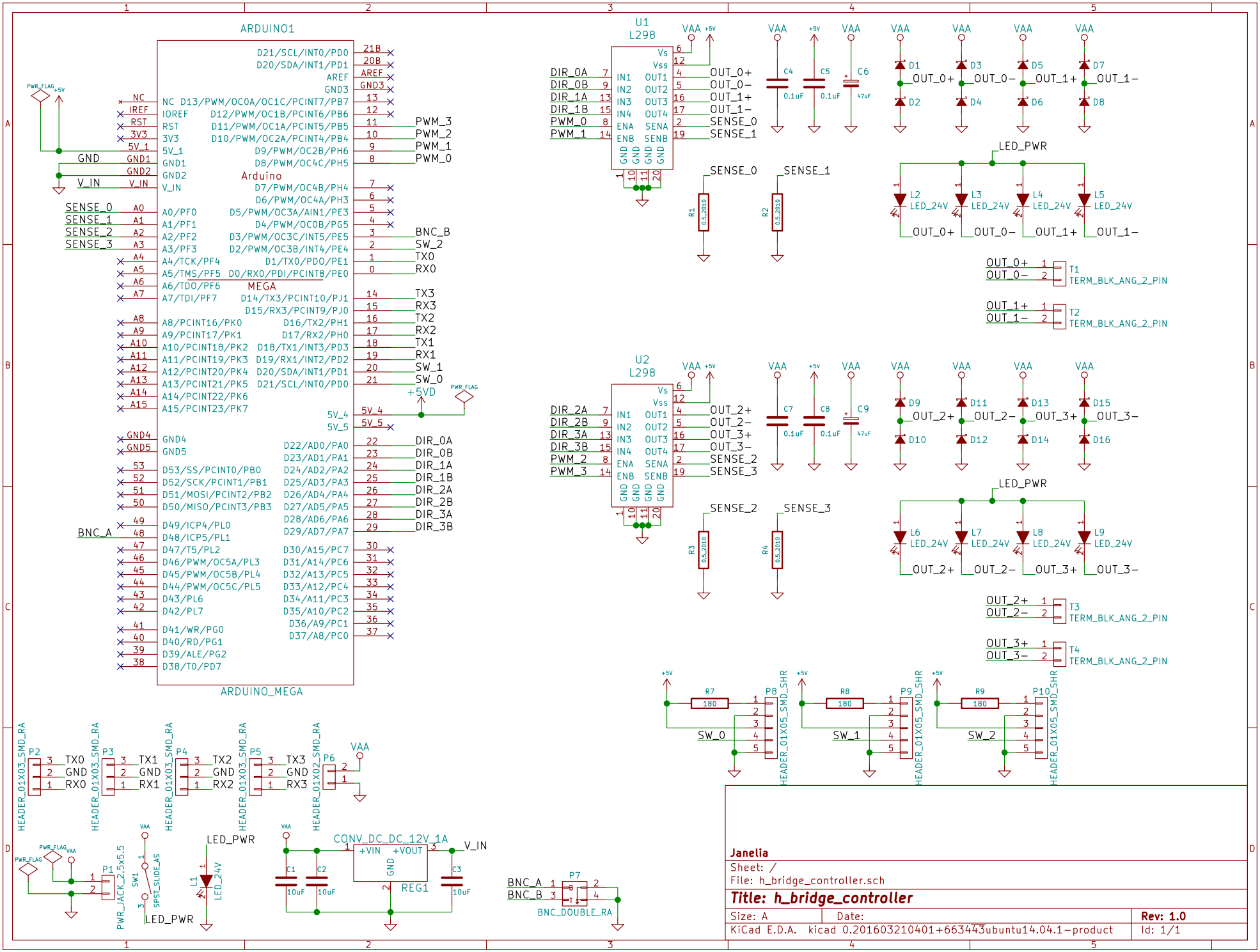
ARDUINO1
ARDUINO_MEGA
Arduino
MEGA
U1
L298
U2
L298
LED_PWR
LED_24V
TERM_BLK_ANG_2_PIN
HEADER_01X05_SMD_SHR
HEADER_01X03_SMD_RA
HEADER_01X02_SMD_RA
PWR_JACK_2.5x5.5
SPST_SLIDE_AS
CONV_DC_DC_12V_1A
REG1
BNC_DOUBLE_RA
Janelia
Sheet: /
File: h_bridge_controller.sch
Title: h_bridge_controller
Size: A
Date:
Rev: 1.0
KiCad E.D.A. kicad 0.201603210401+663443ubuntu14.04.1-product
Id: 1/1