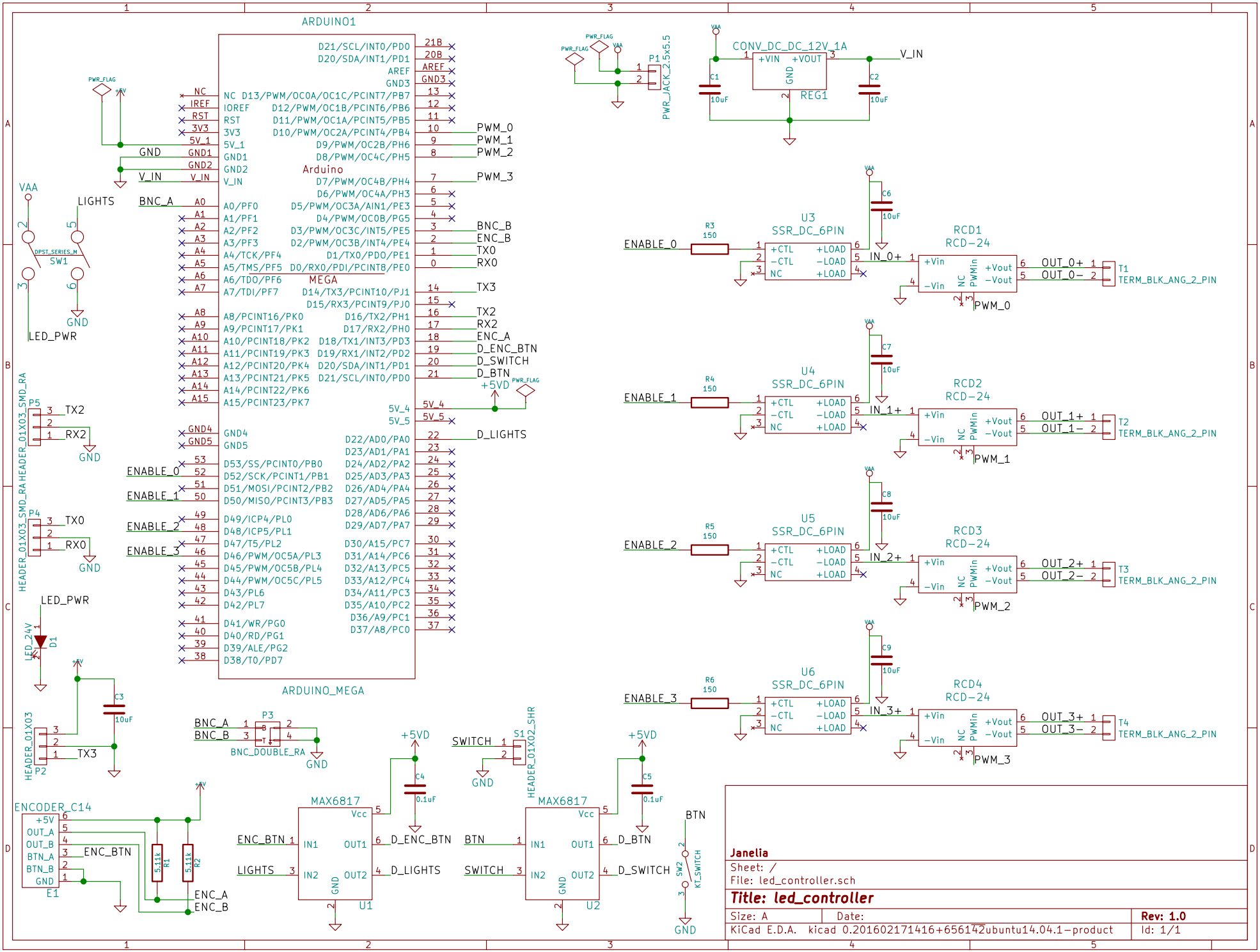

Janelia

Sheet: /

File: led_controller.sch

Title: led_controller

Size: A	Date:	Rev: 1.0
KiCad E.D.A. kicad 0.201602171416+656142ubuntu14.04.1-product		Id: 1/1