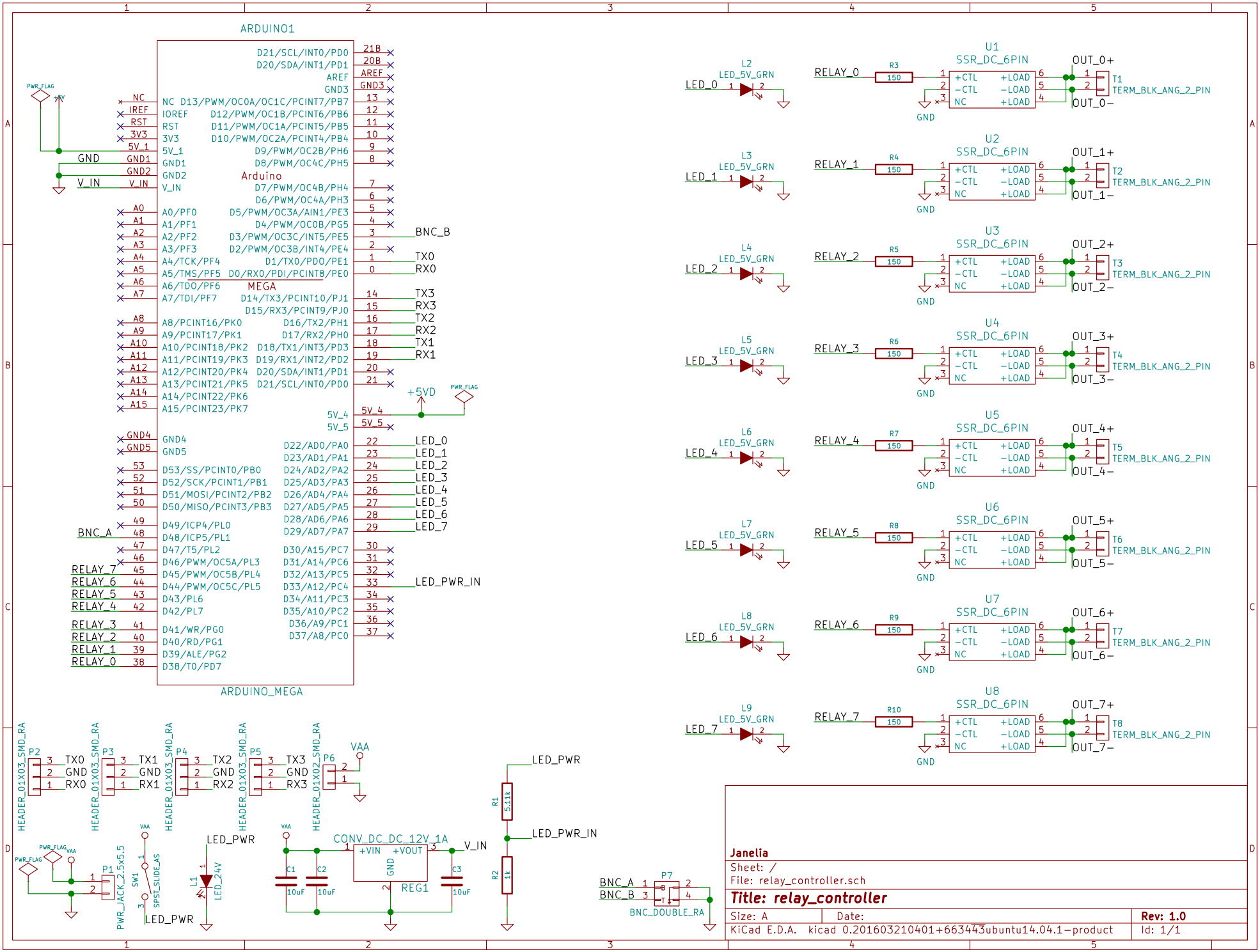
ARDUINO1
ARDUINO_MEGA
Arduino
MEGA
U1
U2
U3
U4
U5
U6
U7
U8
SSR_DC_6PIN
T1
T2
T3
T4
T5
T6
T7
T8
TERM_BLK_ANG_2_PIN
L2
L3
L4
L5
L6
L7
L8
L9
LED_5V_GRN
R3
R4
R5
R6
R7
R8
R9
R10
150
P1
PWR_JACK_2.5x5.5
SW1
SPST_SLIDE_AS
L1
LED_24V
CONV_DC_DC_12V_1A
REG1
C1
C2
C3
10uF
R1
5.11k
R2
1k
P2
P3
P4
P5
P6
P7
HEADER_01X03_SMD_RA
HEADER_01X02_SMD_RA
BNC_DOUBLE_RA
PWR_FLAG
+5VD
VAA
LED_PWR
LED_PWR_IN
V_IN
GND
BNC_A
BNC_B
Janelia
Sheet: /
File: relay_controller.sch
Title: relay_controller
Size: A
Date:
Rev: 1.0
KiCad E.D.A. kicad 0.201603210401+663443ubuntu14.04.1-product
Id: 1/1