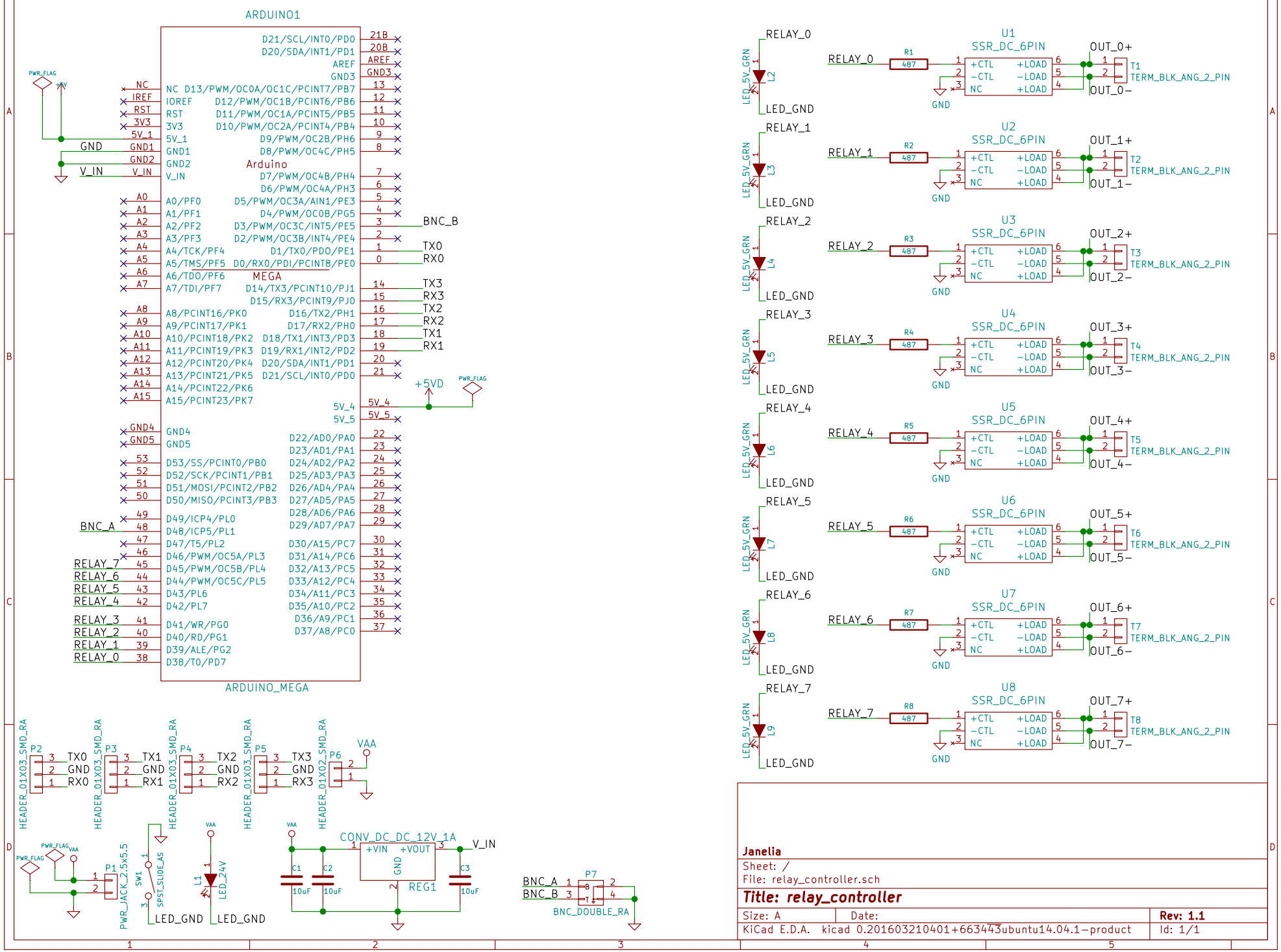
ARDUINO1
ARDUINO_MEGA
Arduino
MEGA
U1
U2
U3
U4
U5
U6
U7
U8
SSR_DC_6PIN
TERM_BLK_ANG_2_PIN
CONV_DC_DC_12V_1A
REG1
BNC_DOUBLE_RA
PWR_JACK_2.5x5.5
SPST_SLIDE_AS
LED_24V
LED_5V_GRN
HEADER_01X03_SMD_RA
HEADER_01X02_SMD_RA
Janelia
Sheet: /
File: relay_controller.sch
Title: relay_controller
Size: A
Date:
Rev: 1.1
KiCad E.D.A. kicad 0.201603210401+6634~ubuntu14.04.1-product
Id: 1/1