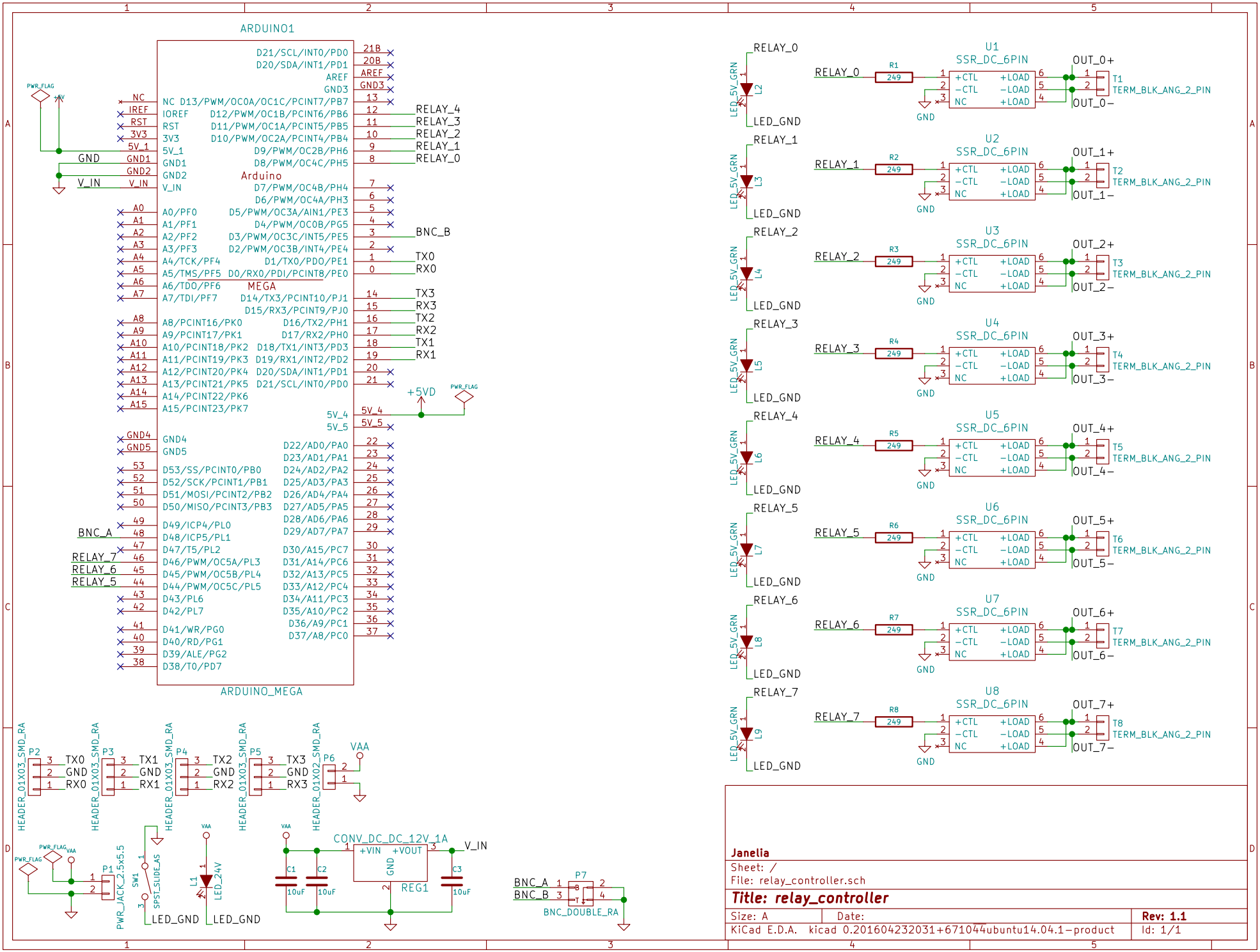

Janelia

Sheet: /

File: relay_controller.sch

Title: relay_controller

Size: A	Date:	**Rev: 1.1**
KiCad E.D.A. kicad 0.201604232031+671044ubuntu14.04.1-product		Id: 1/1