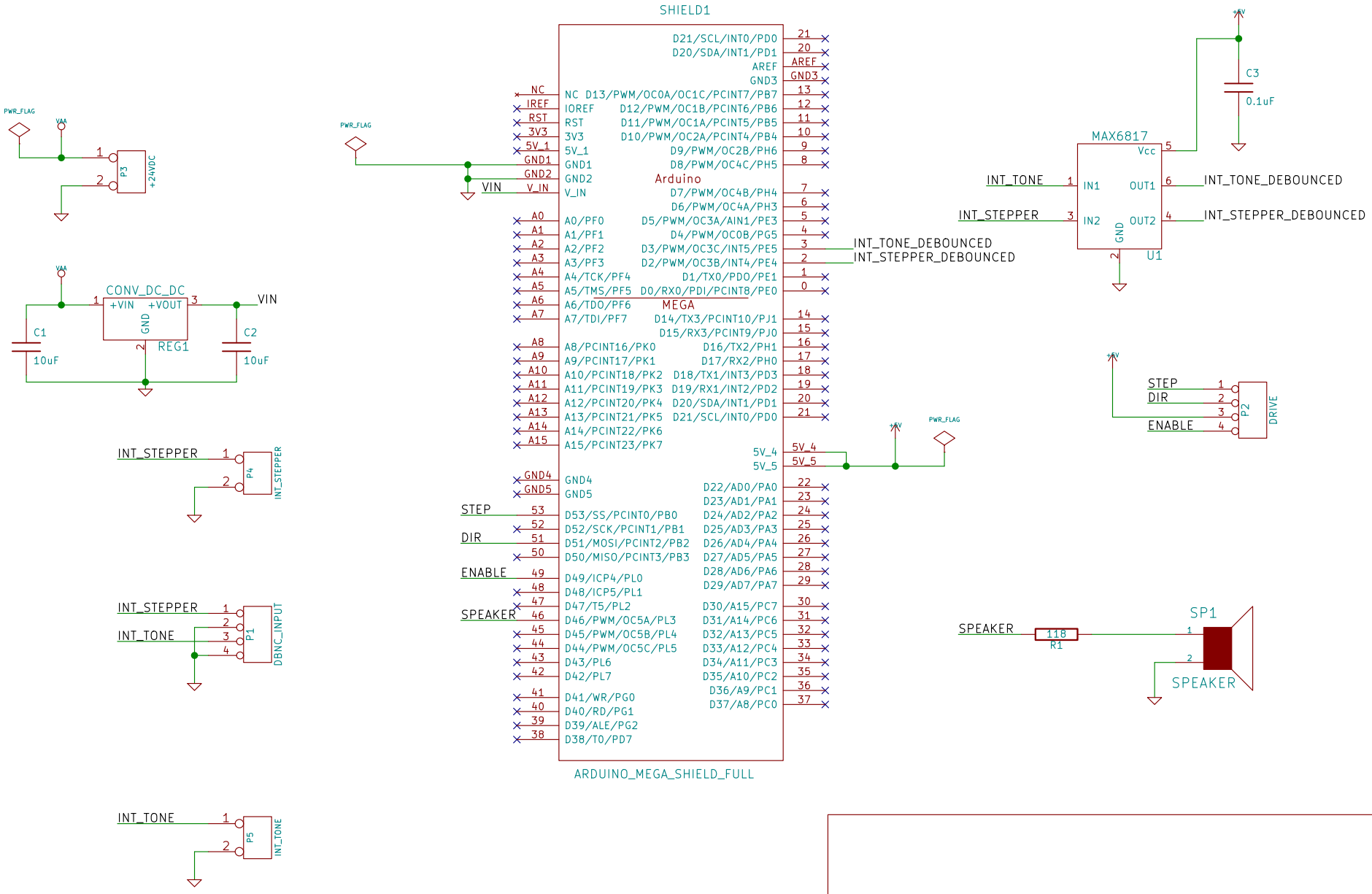

Sheet: /
File: stepper_controller.sch

Title: stepper_controller

Size: A4	Date: 11 mar 2014	Rev: 1.0
KiCad E.D.A. kicad no-vcs-found-product		Id: 1/1