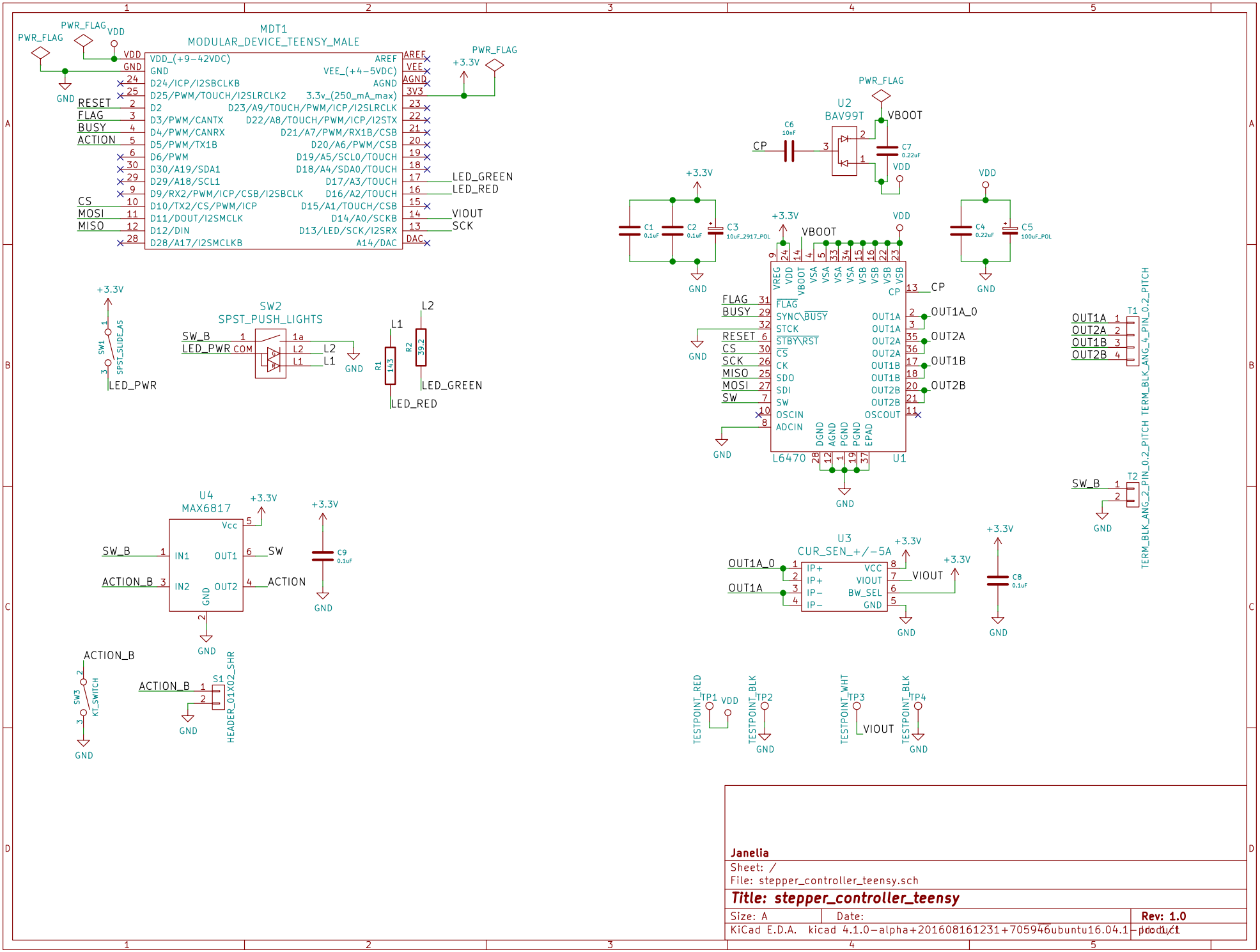
MDT1
MODULAR_DEVICE_TEENSY_MALE
VDD_(+9-42VDC)
GND
D24/ICP/I2SBCLKB
D25/PWM/TOUCH/I2SLRCLK2
D2
D3/PWM/CANTX
D4/PWM/CANRX
D5/PWM/TX1B
D6/PWM
D30/A19/SDA1
D29/A18/SCL1
D9/RX2/PWM/ICP/CSB/I2SBCLK
D10/TX2/CS/PWM/ICP
D11/DOUT/I2SMCLK
D12/DIN
D28/A17/I2SMCLKB
AREF
VEE_(+4-5VDC)
AGND
3.3v_(250_mA_max)
D23/A9/TOUCH/PWM/ICP/I2SLRCLK
D22/A8/TOUCH/PWM/ICP/I2STX
D21/A7/PWM/RX1B/CSB
D20/A6/PWM/CSB
D19/A5/SCL0/TOUCH
D18/A4/SDA0/TOUCH
D17/A3/TOUCH
D16/A2/TOUCH
D15/A1/TOUCH/CSB
D14/A0/SCKB
D13/LED/SCK/I2SRX
A14/DAC
RESET
FLAG
BUSY
ACTION
CS
MOSI
MISO
LED_GREEN
LED_RED
VIOUT
SCK
PWR_FLAG
VDD
+3.3V
SW2
SPST_PUSH_LIGHTS
SW_B
LED_PWR
COM
L1
L2
R1
R2
143
39.2
SW1
SPST_SLIDE_AS
U4
MAX6817
IN1
IN2
OUT1
OUT2
Vcc
SW
ACTION
ACTION_B
C9
0.1uF
SW3
KT_SWITCH
S1
HEADER_01X02_SHR
U2
BAV99T
C6
10nF
C7
0.22uF
CP
C1
0.1uF
C2
0.1uF
C3
10uF_2917_POL
C4
0.22uF
C5
100uF_POL
VBOOT
U1
L6470
FLAG
SYNC\BUSY
STCK
STBY\RST
CS
CK
SDO
SDI
SW
OSCIN
ADCIN
OUT1A
OUT2A
OUT1B
OUT2B
OSCOUT
OUT1A_0
U3
CUR_SEN_+/-5A
IP+
IP-
VCC
BW_SEL
GND
C8
0.1uF
T1
TERM_BLK_ANG_4_PIN_0.2_PITCH
T2
TERM_BLK_ANG_2_PIN_0.2_PITCH
TP1
TP2
TP3
TP4
TESTPOINT_RED
TESTPOINT_BLK
TESTPOINT_WHT
Janelia
Sheet: /
File: stepper_controller_teensy.sch
Title: stepper_controller_teensy
Size: A
Date:
Rev: 1.0
KiCad E.D.A. kicad 4.1.0-alpha+201608161231+705946~ubuntu16.04.1-product
Id: 1/1