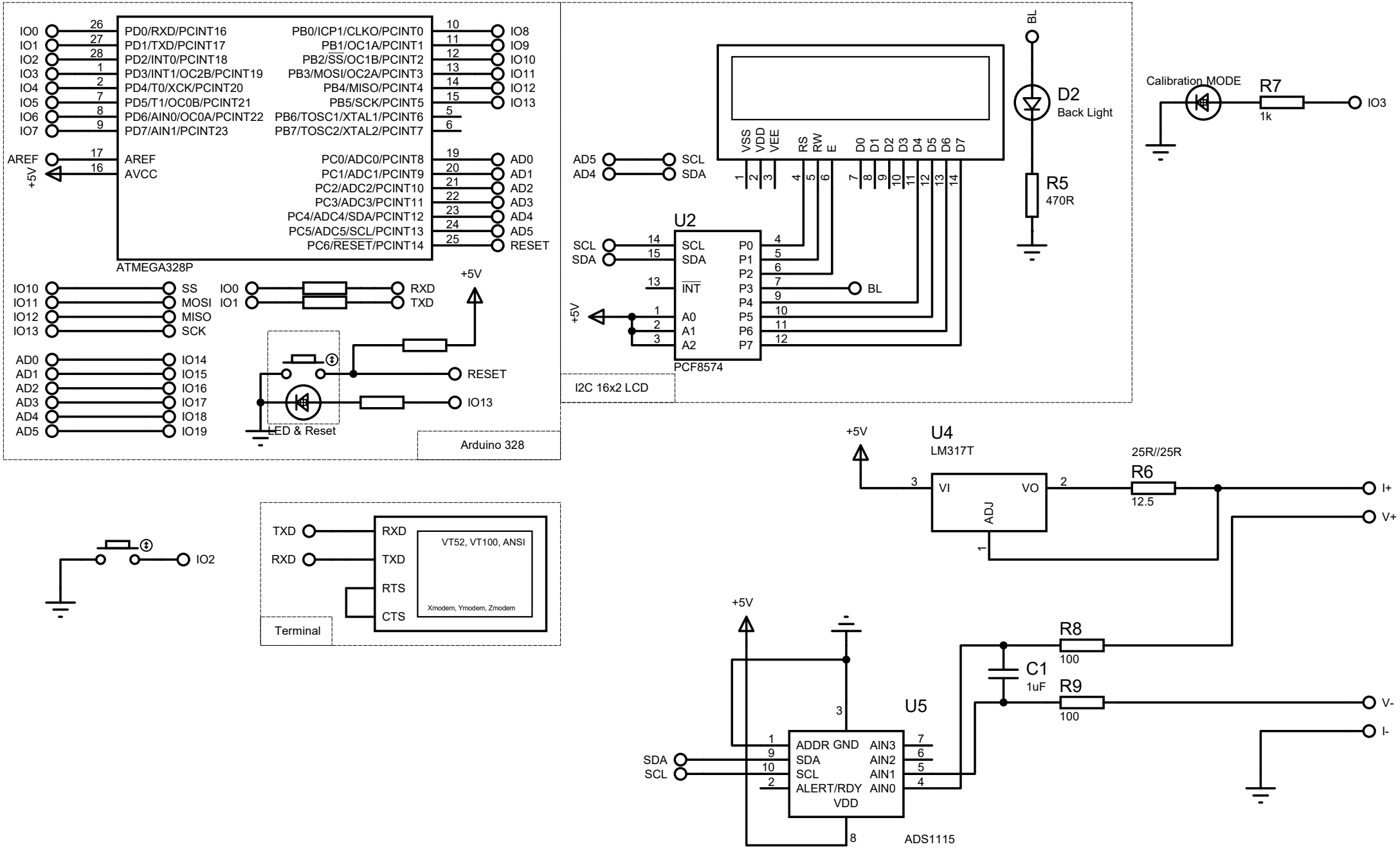


# Arduino milliohmmeter 0-10 Ohm

## Arduino using I2C 16x2 LCD breakboard