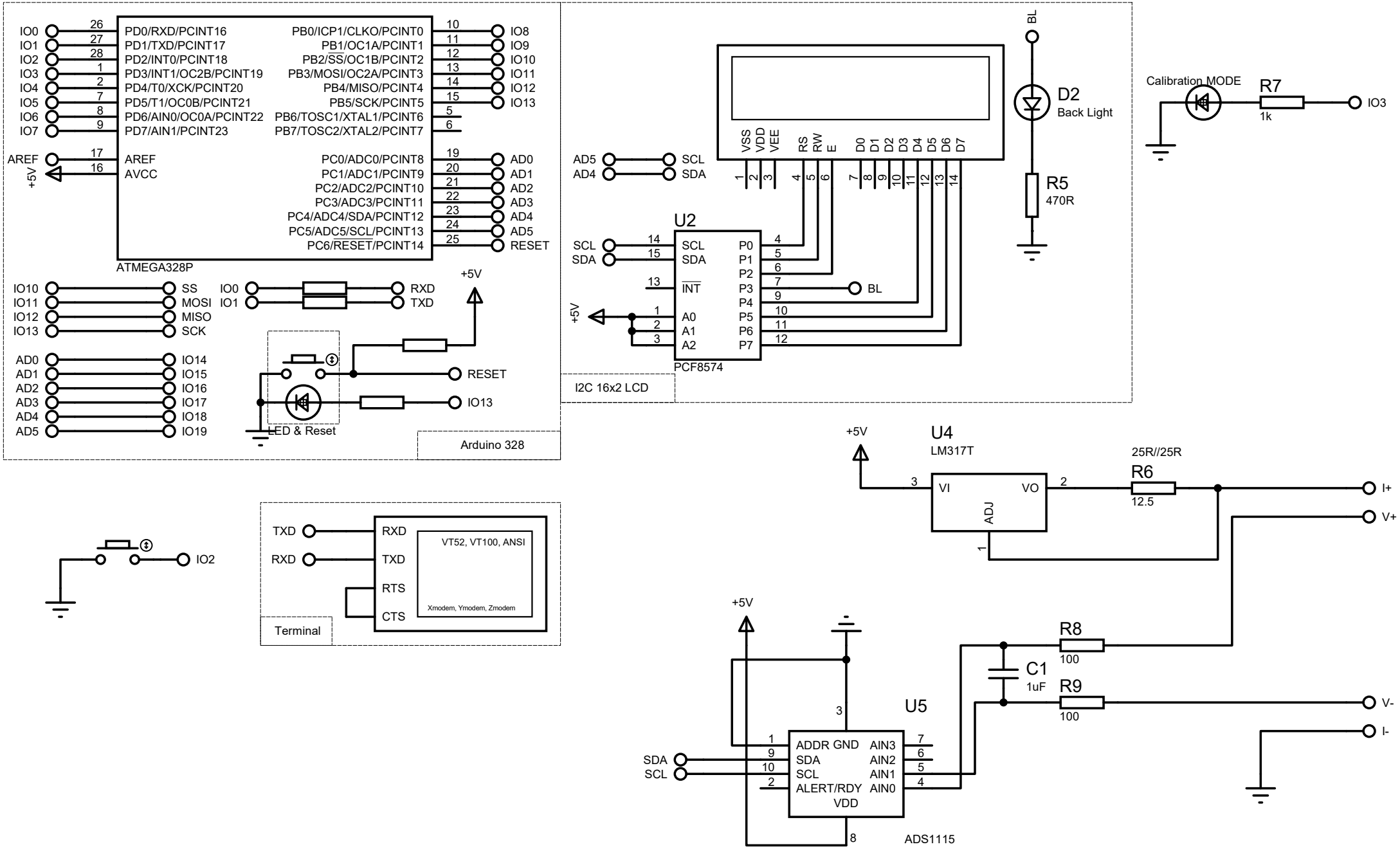

Arduino milliohmmeter 0-10 Ohm

Arduino using I2C 16x2 LCD breakboard