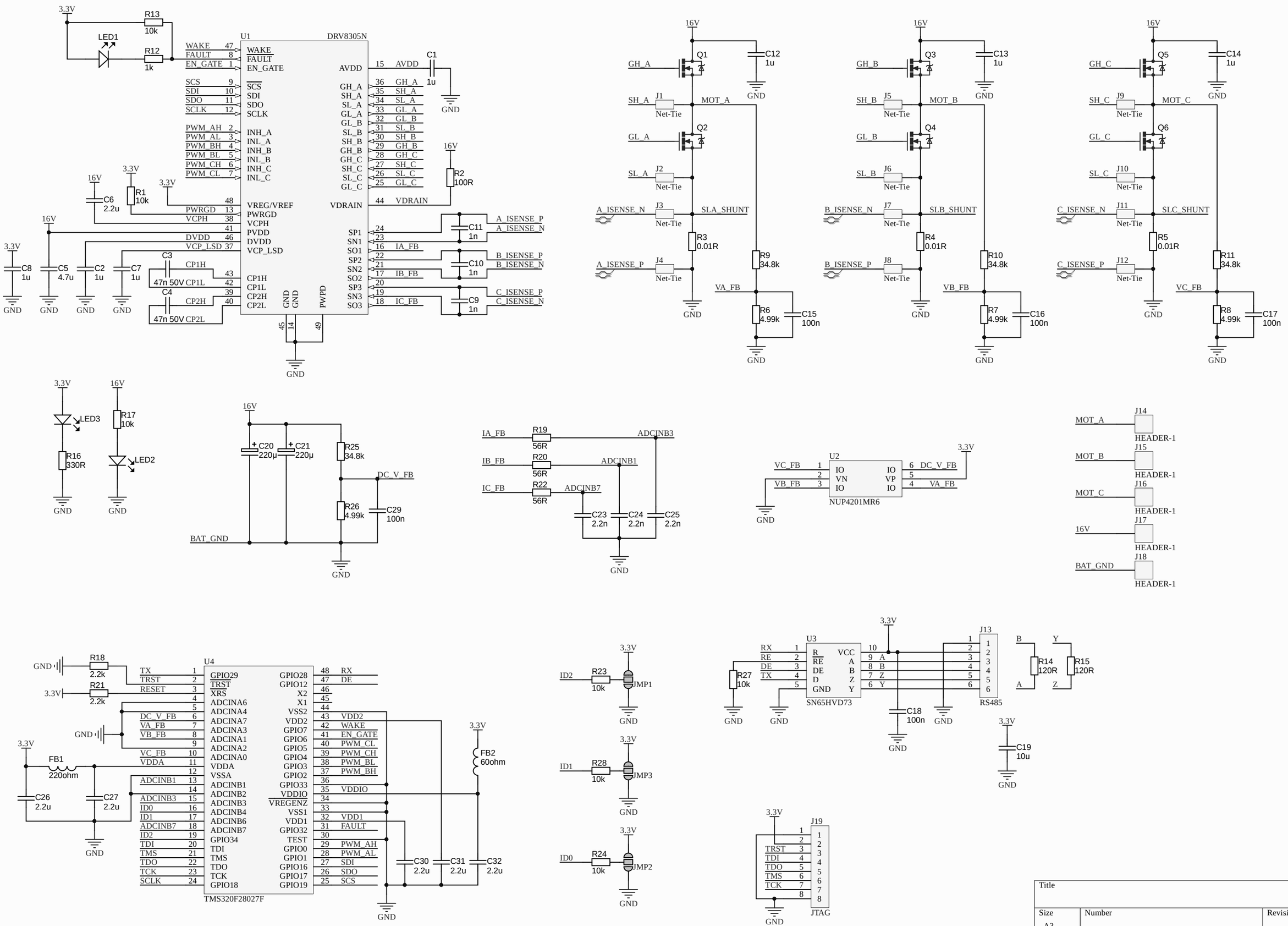

Title		
Size A3	Number	Revision
Date: 29.03.2018	Sheet of	
File: C:\Users\..\drv8305_instaspin_driver.SchDoc	Drawn By:	

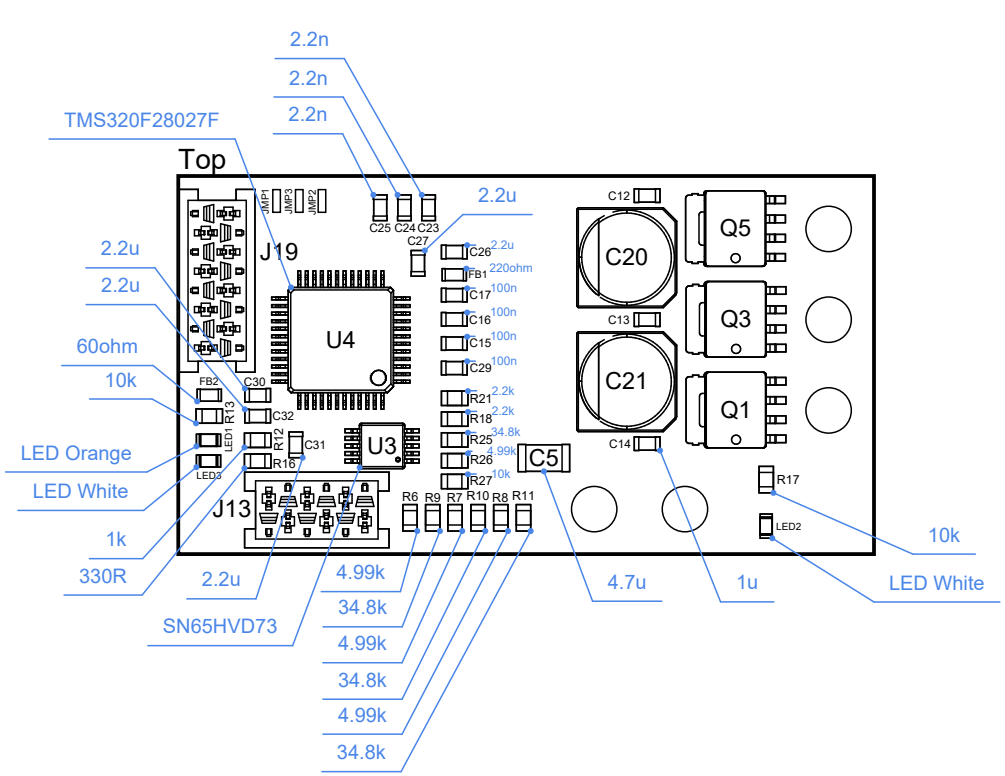
Top
TMS320F28027F
2.2n
2.2n
2.2n
2.2u
2.2u
2.2u
60ohm
10k
LED Orange
LED White
1k
330R
2.2u
SN65HVD73
4.99k
34.8k
4.99k
34.8k
4.99k
34.8k
4.7u
1u
10k
LED White
J19
U4
U3
J13
C5
C20
C21
Q5
Q3
Q1
C25 C24 C23
C27
C12
C13
C14
R17
LED2
R6 R9 R7 R10 R8 R11

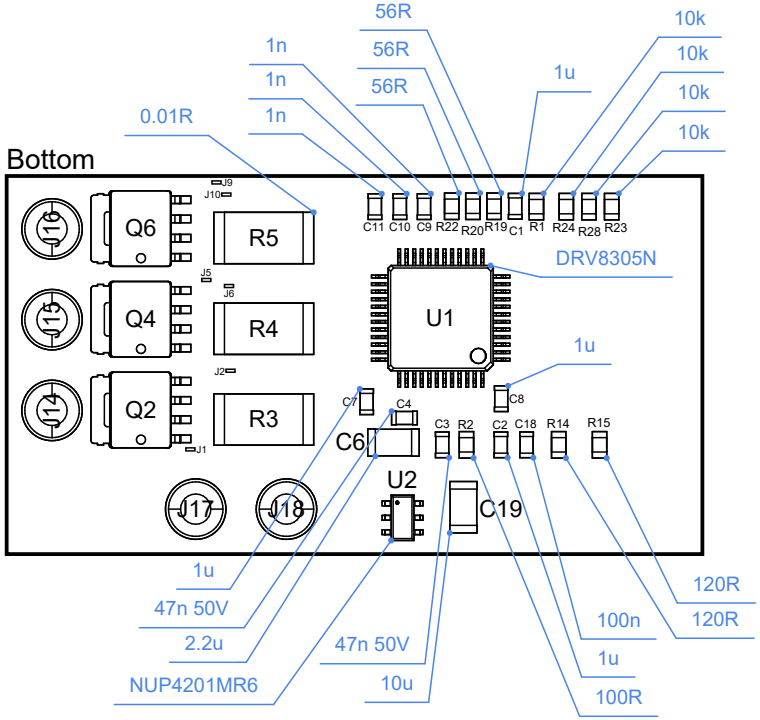
Bottom
56R
56R
56R
1n
1n
1n
0.01R
1u
10k
10k
10k
10k
DRV8305N
1u
1u
47n 50V
2.2u
NUP4201MR6
47n 50V
10u
100n
1u
100R
120R
120R
Q6
Q4
Q2
R5
R4
R3
U1
U2
C6
C19
J16
J15
J14
J17
J18
C11 C10 C9 R22 R20 R19 C1 R1 R24 R28 R23
C7 C4 C3 R2 C2 C18 R14 R15
C8