Solar Plane Design Report (Detailed, with MPPT + Graphs)

Project workspace: C:\Users\Janal\NewPWS

March 8, 2026

1. Project Inputs and Constraints

- Airframe mass used in analysis: 1.851 kg (your 1.70 kg baseline plus servos, wiring, MPPT allowance).
- Wing geometry: span 3.00 m, area 0.600 m^2, aspect ratio 15.00.
- Solar cells: 21 cells of 125 mm x 125 mm mono.
- Battery bay hard limits: depth 54 mm, width 31 mm (+3 mm tolerated), height 19 mm.
- Existing propulsion hardware: D3530 1100KV, 14x4.7 slow-fly prop (CW), 50A ESC.

2. Core Performance Results

- Estimated stall speed: 6.42 m/s
- Best-endurance speed: 8.25 m/s
- Mission speed used (1.4 x stall margin): 8.98 m/s
- Electrical power at best-endurance speed: 17.95 W
- Electrical power at mission speed: 21.41 W
- Motor estimate: loaded RPM 5417 rpm, current 28.0 A, static thrust 12.0 N

3. Flight Power and Duration Graphs

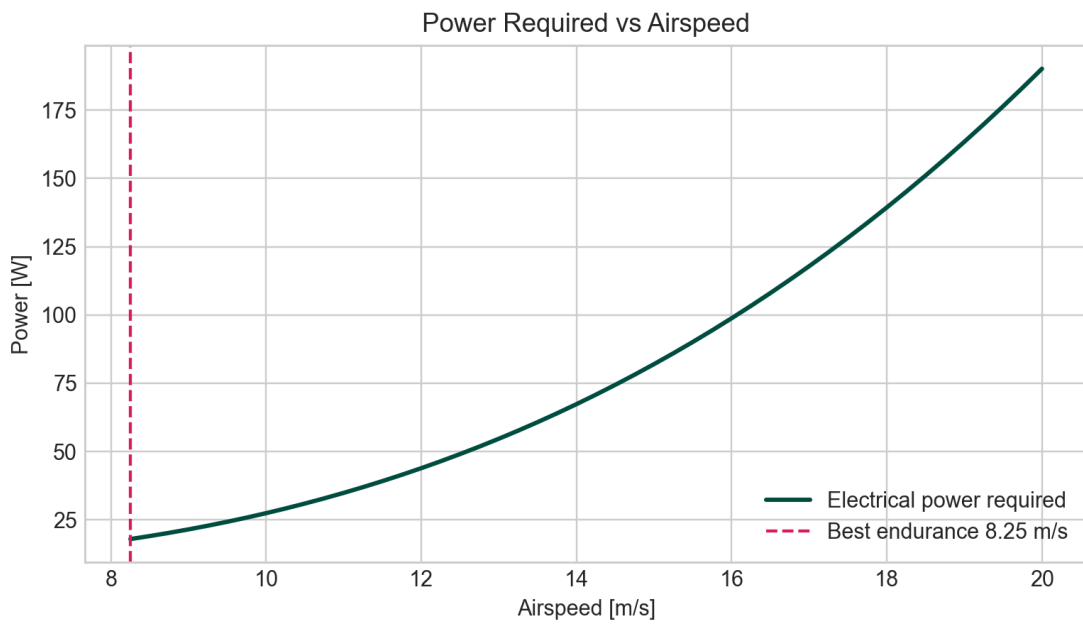

Figure 1: Electrical power required vs airspeed.

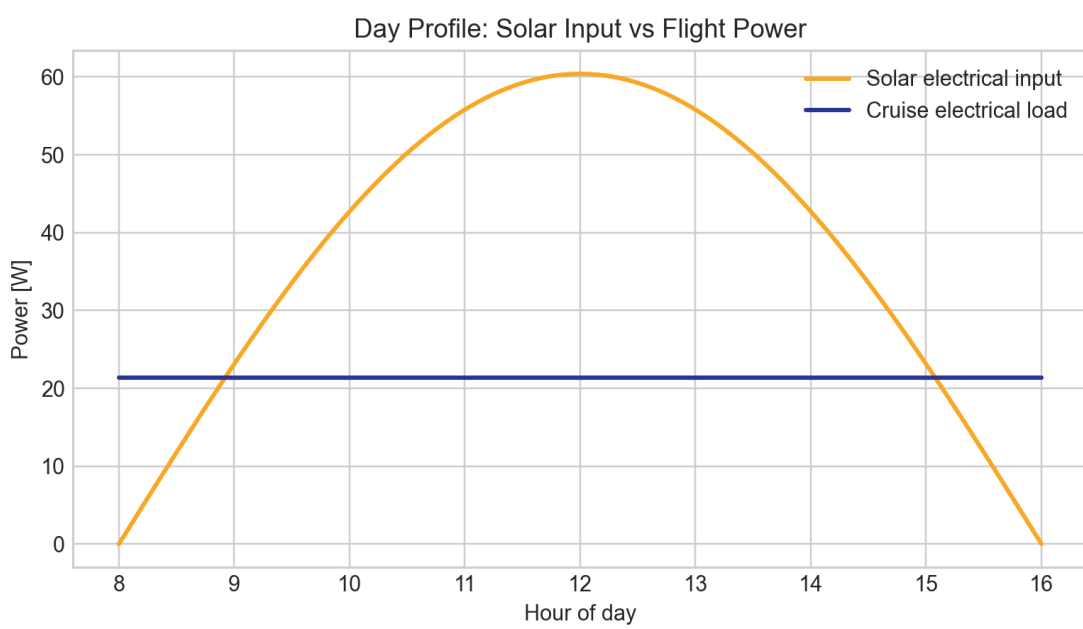

Figure 2: Day profile power balance: solar input vs cruise load.

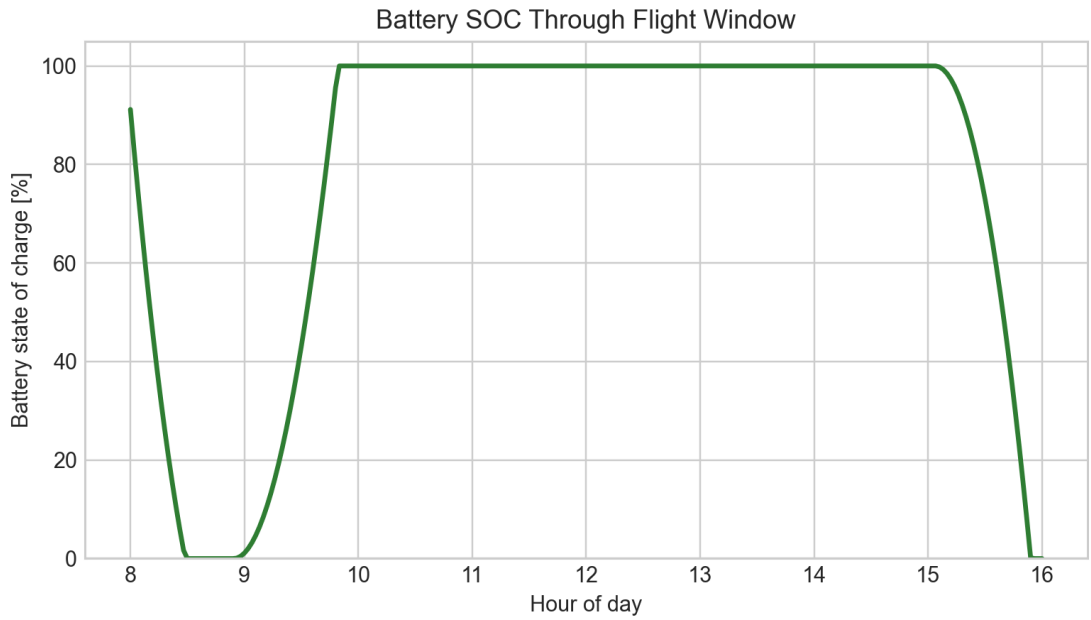

Figure 3: Battery state of charge through the daylight mission window.

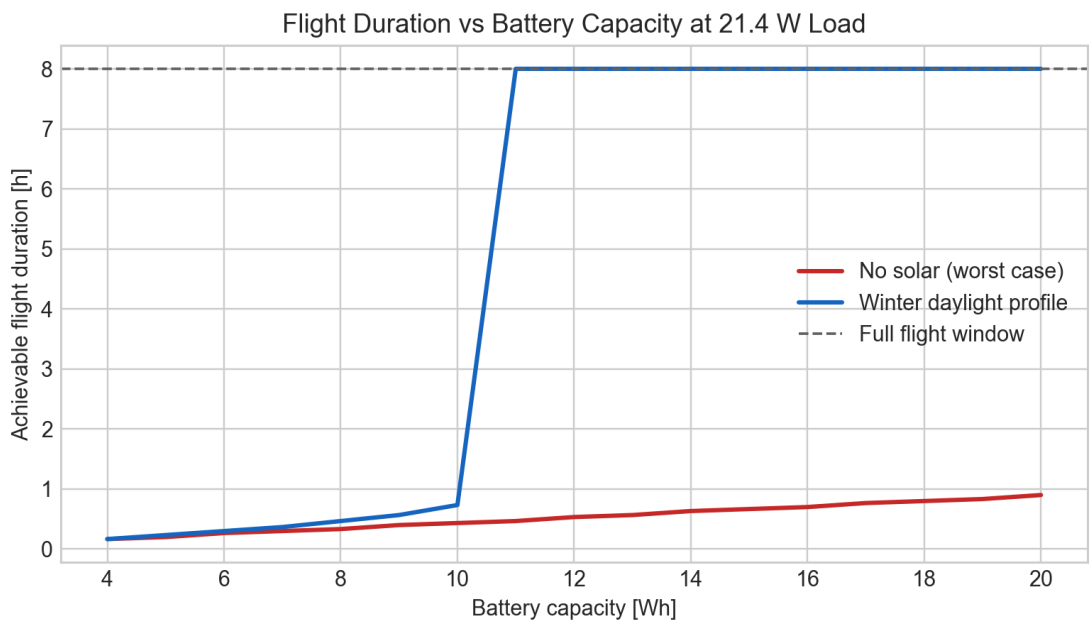

Figure 4: Flight duration versus battery capacity (with and without solar support).

4. Battery Feasibility for Your Battery Bay

- 30-minute reserve target: 11.22 Wh (minimum 1011 mAh at 3S nominal).
- 20-minute reserve target: 7.48 Wh.

- Theoretical max energy in bay (450–550 Wh/L): 14.31 Wh to 17.49 Wh.
- Daylight simulation minimum SOC: 0.0%, final SOC: 0.0%, first empty time: 8.50h.

Researched battery options

Pack	mAh	Wh	g	D x W x H (mm)	Strict fit	Meets 30-min reserve
Thunder Power Pro Lite V2 3S 500mAh 70C	500	5.55	49	53x30x13	Yes	No
Thunder Power Pro Lite V2 3S 750mAh 70C	750	8.32	69	55x31x18	No	No
Tattu R-Line 3S 650mAh 75C	650	7.21	70	58x31x16	No	No
Tattu R-Line 3S 850mAh 75C	850	9.43	91	58x30x22	No	No

Strict-fit options found: Thunder Power Pro Lite V2 3S 500mAh 70C

If depth can extend to about 58 mm: Thunder Power Pro Lite V2 3S 500mAh 70C, Thunder Power Pro Lite V2 3S 750mAh 70C, Tattu R-Line 3S 650mAh 75C

5. Proper MPPT Controller Selection (Module-level, not chip-only)

Using your 21-cell panel as one series string:

$$V_{MP,array} \approx 21 \cdot 0.55 = 11.55 \text{ V}, \quad V_{OC,array} \approx 21 \cdot 0.64 = 13.44 \text{ V}$$

This panel voltage is below robust buck-MPPT headroom for charging a 3S Li-ion pack at 12.6 V. For buck topologies, practical cell count is about 25 (minimum) to 28 (recommended margin). Therefore, with 21 cells, a **boost or buck-boost MPPT** is the correct architecture.

MPPT module options

Model	Topology	Key specs	Fits current 21-cell panel?
Genasun GVB-8-Li-CV	Boost MPPT (complete controller)	5-27V panel input, up to 8A output (114W at 14.2V)	Yes; 21S panel Vmp ~11.6V is within boost range
Genasun GV-10-Li-CV	Buck MPPT (complete controller)	10A output class; requires panel Vmp above battery charge voltage	No for robust margin with 3S Li-ion at 12.6V
TI BQ25798EVM	Buck-boost dev board (complete EVM)	Integrated MPPT function, advanced control and integration effort	Yes technically, but high development complexity

Recommended for your build: Genasun GVB-8-Li-CV with custom 3S Li-ion charge profile (12.6 V CV), because it is a complete boost MPPT controller and matches low panel voltage operation.

Required supporting components around MPPT

- PV fuse near panel positive lead, sized around 1.25x panel Isc branch current.
- Dedicated MPPT-to-battery branch fuse (about 10A for an 8A-class controller).
- Main battery fuse for propulsion branch (about 40A with your ESC/motor class).
- XT60 (or equivalent) connectors and 16–14 AWG wire on high-current paths.

6. Wiring Diagram A: Power Architecture

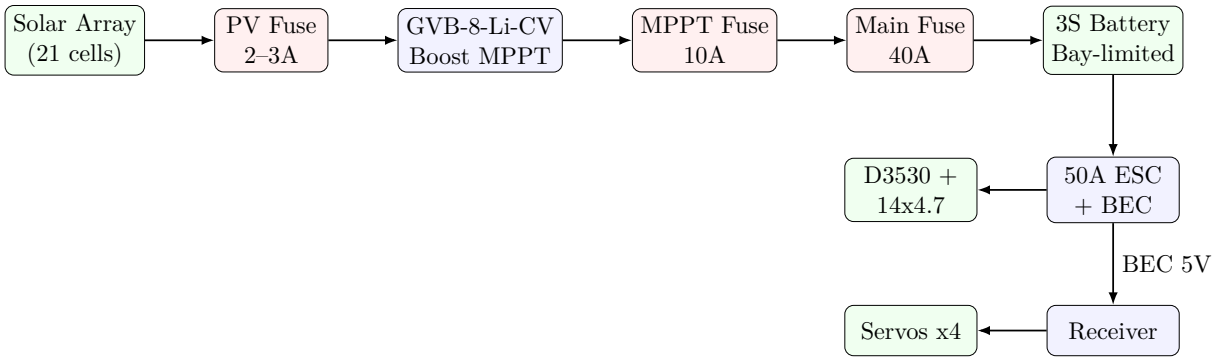

Figure 5: Recommended power wiring with dedicated MPPT branch protection.

7. Wiring Diagram B: Signal and Channel Mapping

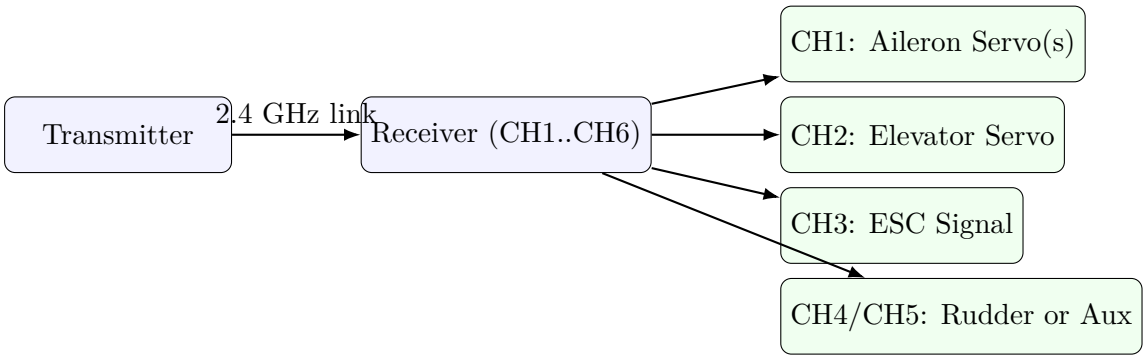

Figure 6: Signal wiring map. Verify channel assignments in transmitter before motor power-up.

8. LW-PLA and Carbon Tube Build Notes

- LW-PLA should be printed hot enough for foaming expansion; tune flow down after expansion to reduce mass.
- Carbon tubes should carry main bending loads in wing spar caps or spar tube; printed parts should primarily transfer loads into tubes.

- Reinforce wing root and motor mount interfaces with local carbon doublers or thicker load-spreading printed inserts.

9. Sources

1. Solar cell electrical reference (CSE125P-6BB): https://solarinnova.net/en/product/cell-cse125p-6bb/
2. Genasun GVB-8 boost MPPT controller page: https://sunforgellc.com/gvb-8/
3. Genasun GVB-8 datasheet/user manual: https://sunforgellc.com/wp-content/uploads/2017/11/GENASUN-GVB-Boost-Manual.pdf
4. Genasun GV-10 MPPT controller page: https://sunforgellc.com/gv-10/
5. TI BQ25798 product page (buck-boost charger with MPPT support): https://www.ti.com/product/BQ25798
6. Thunder Power LiPo dimensions/spec chart: https://www.chiefaircraft.com/downloads/tp-lipo.pdf
7. Tattu 650mAh 3S product page (dimensions): https://www.gensace.de/tattu-r-line-650mah-11-1v-75 html
8. Tattu 850mAh 3S product page (dimensions): https://www.gensace.de/tattu-r-line-version-4-0-850 html
9. colorFabb LW-PLA product and print guidance: https://colorfabb.com/lw-pla-natural?srsltid=AfmBOopoCdZegtz2AIdR2wfQZQ5N8a1ba9hLJxQFUnUGR92Ve8g7Qy2D
10. eSUN LW-PLA material data: https://www.esun3d.com/epla-lw-product/
11. Easy Composites carbon tube data sheet: https://www.easycomposites.co.uk/pub/media/pdf/carbon-fibre-tube-data-sheet.pdf