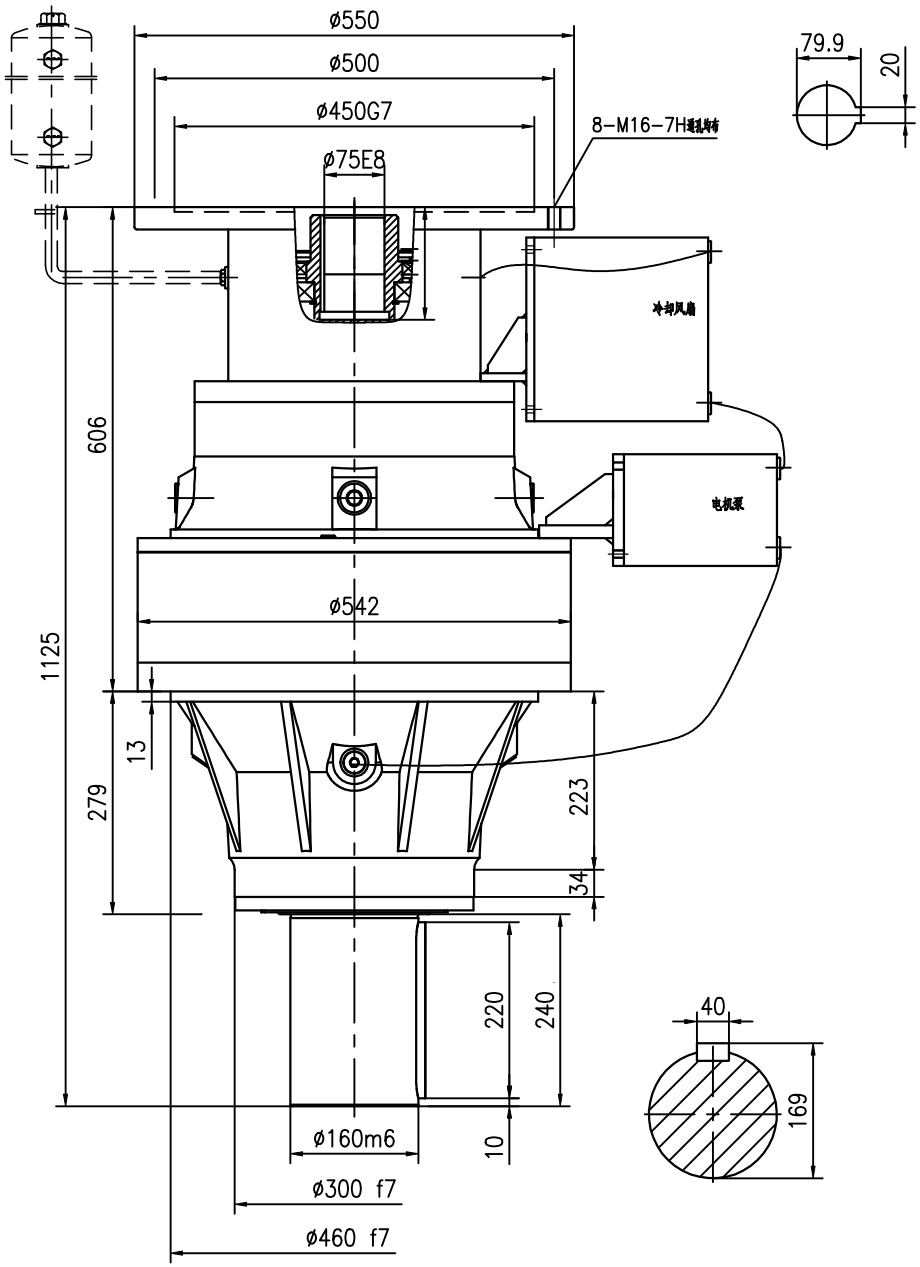

1.Motor power: P=75KW

2.Ratio i=38.6

3.Rated output torque T=35300Nm

4.Thermal power Pt=40KW

It needs to add cooling system when working

5.Size SPN14L2-38.6-HC-AM280-T

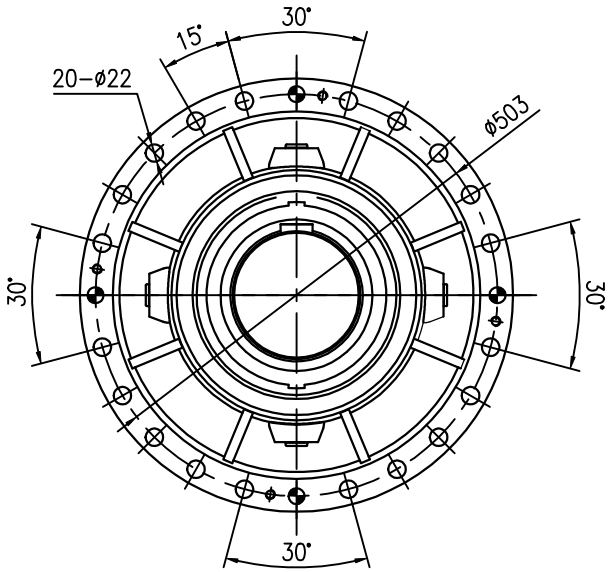

SPN14L2-HC	
Drawing	
SUPROR	