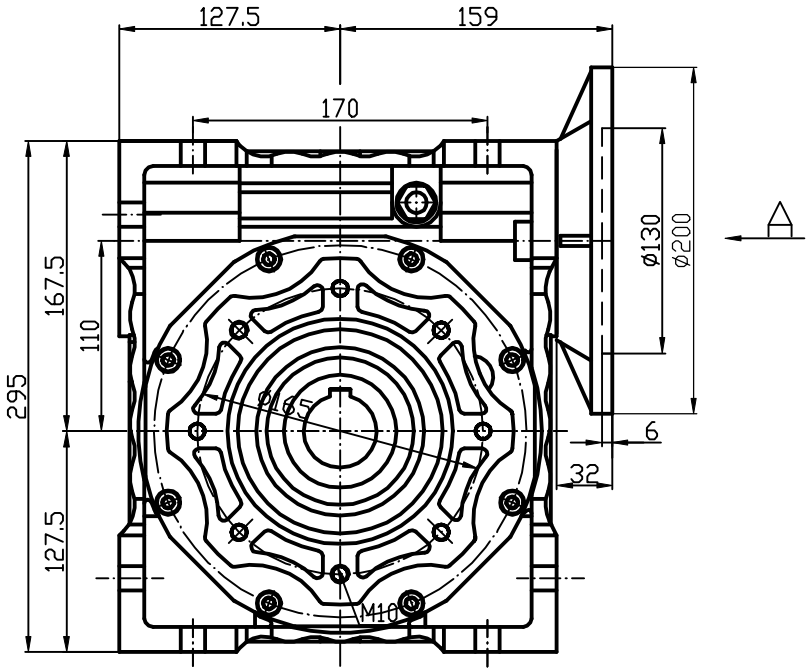

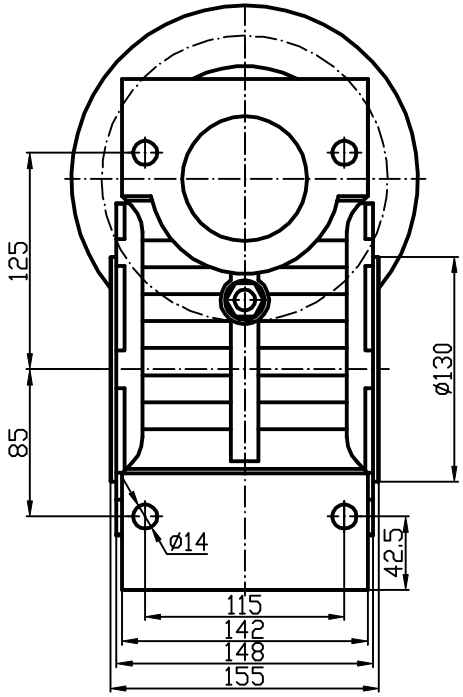

Aside

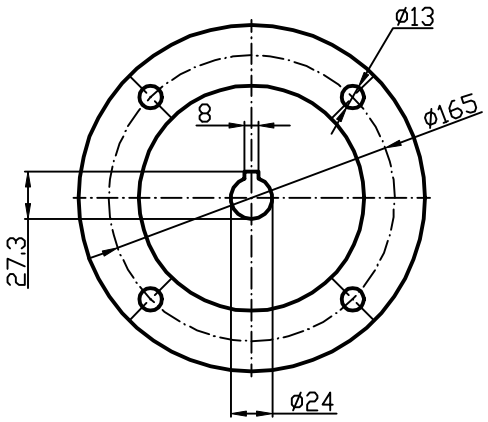

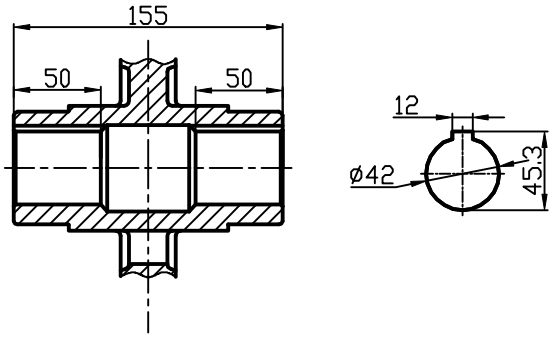

EGM110-90B5