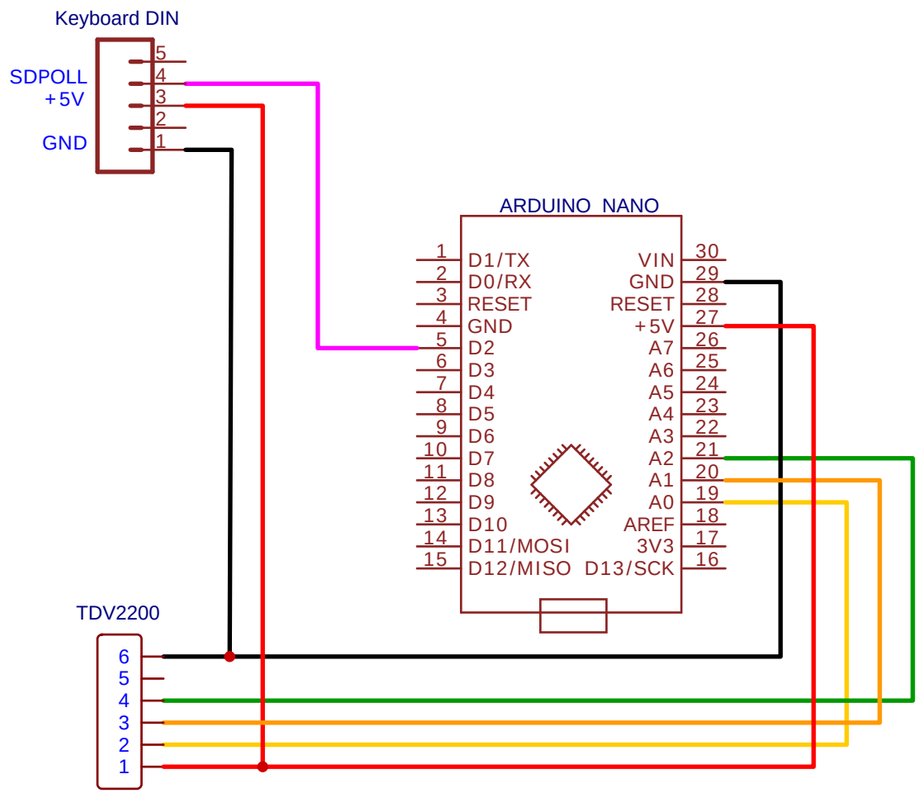

TITLE: Adapter: TDV2200 to NCR		REV: 1.0
EasyEDA	Company: Jan Kjetil Wik	Sheet: 1/1
	Date: 2021-06-18 Drawn By:	