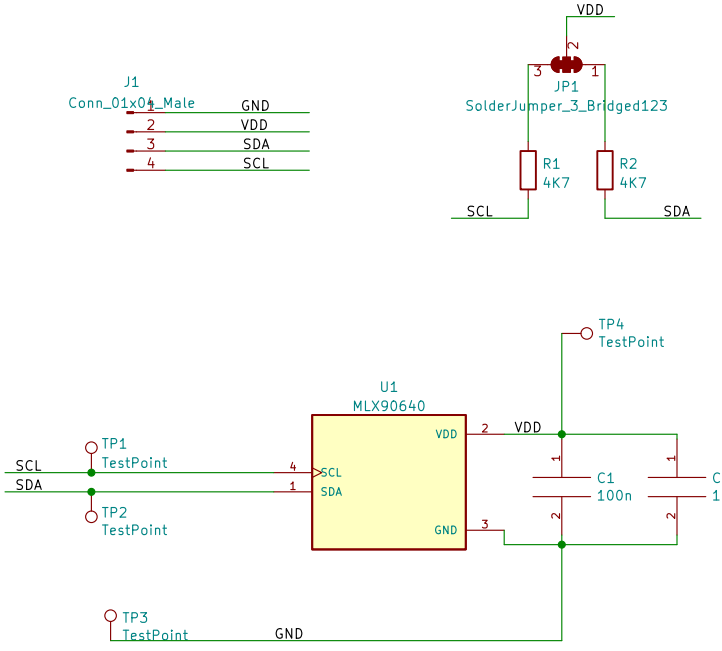

Melexis Inc

Sheet: /

File: mlx90640-breakout.kicad_sch

Title: mlx90640-breakout

Size: User	Date: 2023-01-16	**Rev: 1.2**
KiCad E.D.A. kicad (6.0.7)		Id: 1/1