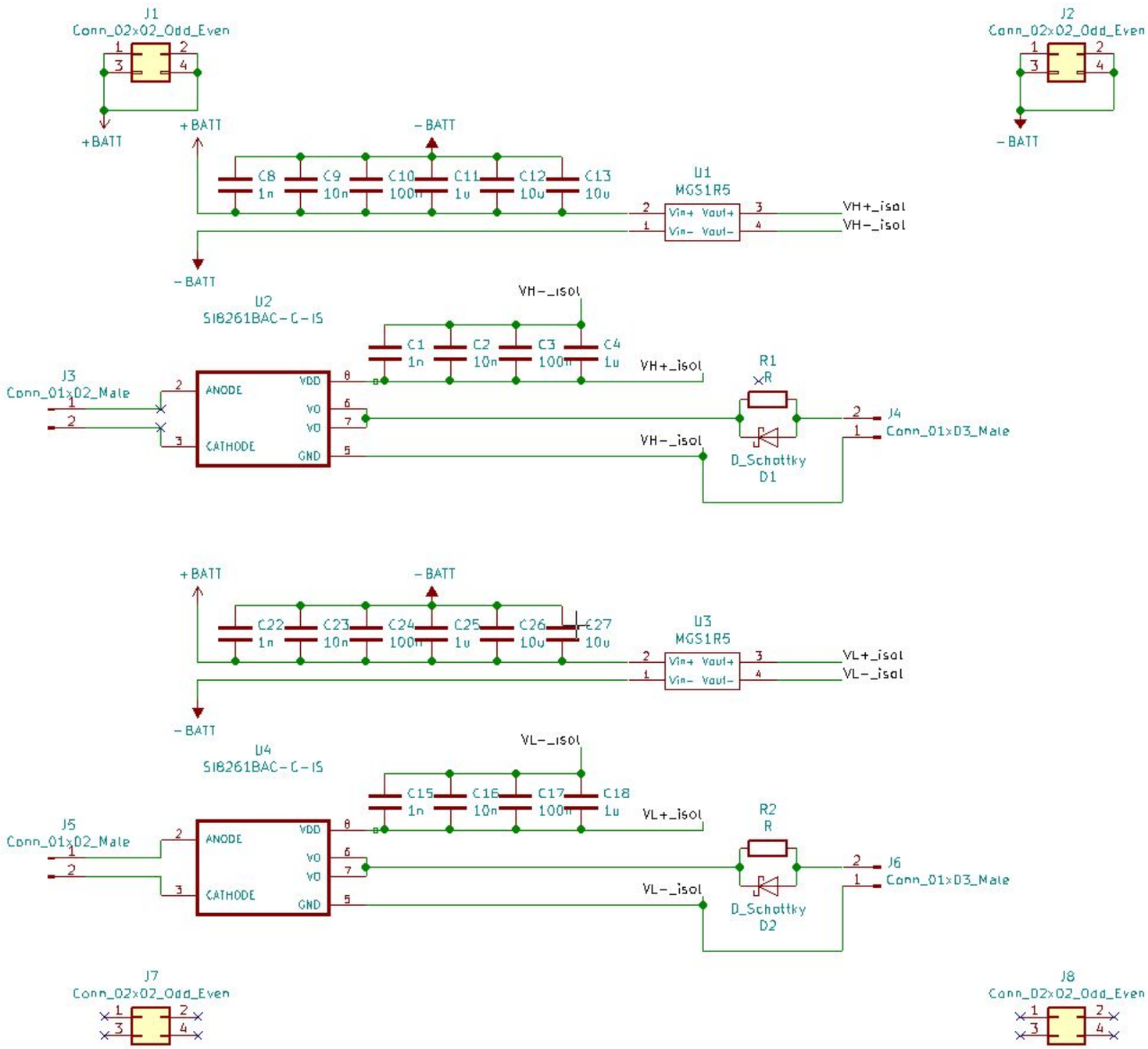
J1
Conn_02x02_Odd_Even
+BATT
-BATT
C8 1n
C9 10n
C10 100n
C11 1u
C12 10u
C13 10u
U1
MGS1R5
Vin+ Vout+
Vin- Vout-
VH+_isol
VH-_isol
U2
SIB261BAC-C-IS
ANODE
CATHODE
VDD
VO
GND
C1 1n
C2 10n
C3 100n
C4 1u
J3
Conn_01x02_Male
R1
R
D_Schottky
D1
J4
Conn_01x03_Male
C22 1n
C23 10n
C24 100n
C25 1u
C26 10u
C27 10u
U3
MGS1R5
VL+_isol
VL-_isol
U4
SIB261BAC-C-IS
C15 1n
C16 10n
C17 100n
C18 1u
J5
Conn_01x02_Male
R2
R
D_Schottky
D2
J6
Conn_01x03_Male
J7
Conn_02x02_Odd_Even
J8
Conn_02x02_Odd_Even

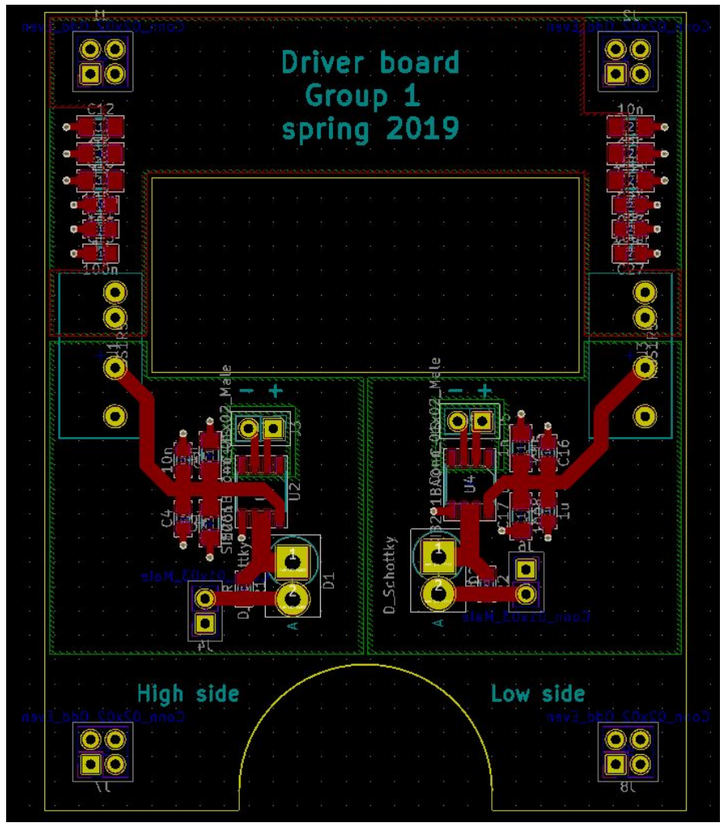
Driver board
Group 1
spring 2019
High side
Low side