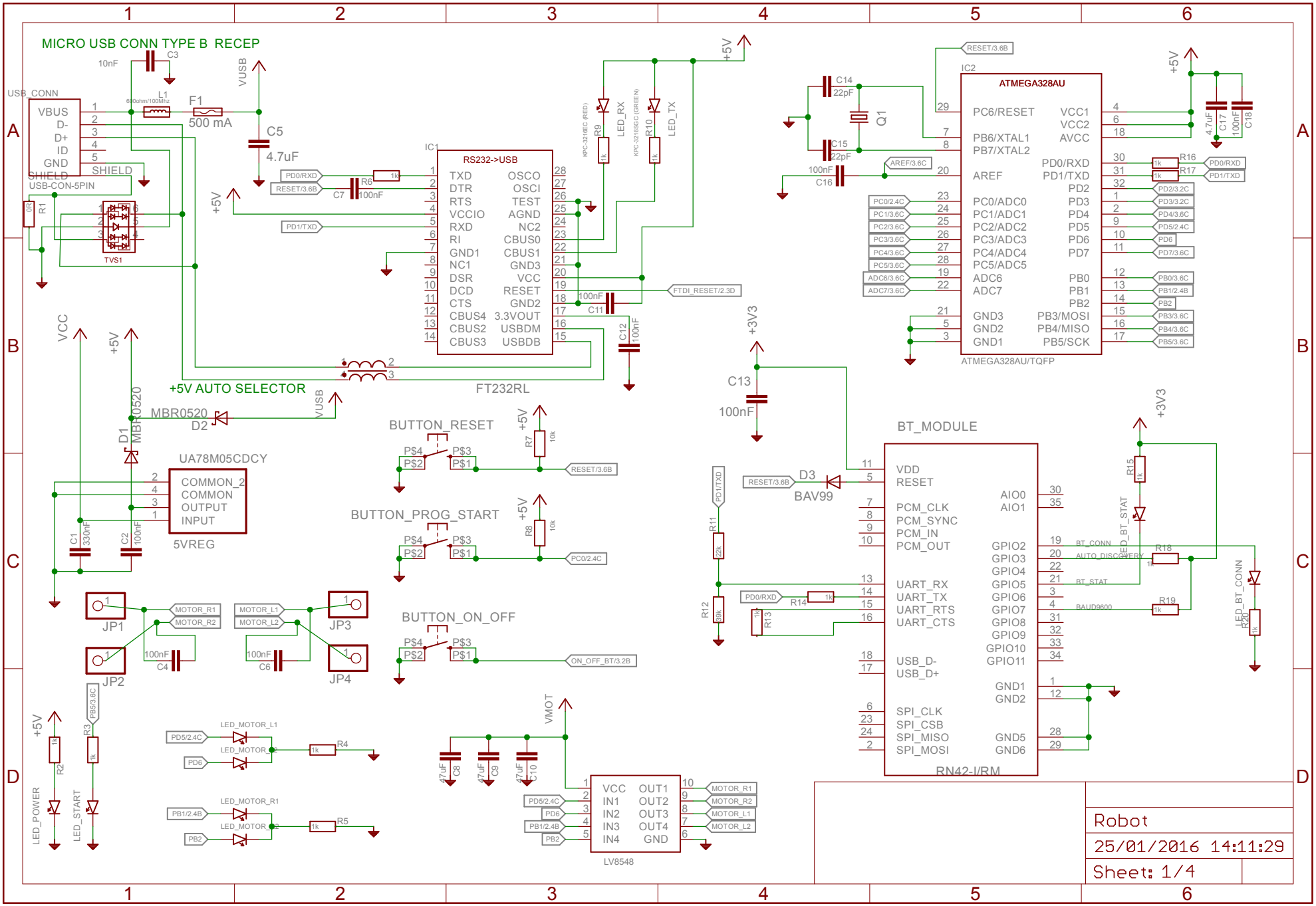
MICRO USB CONN TYPE B RECEP
USB_CONN
VBUS
D-
D+
ID
GND
SHIELD
USB-CON-5PIN
TVS1
C3
10nF
L1
600ohm/100Mhz
F1
500 mA
VUSB
C5
4.7uF
+5V
IC1
RS232->USB
TXD
DTR
RTS
VCCIO
RXD
RI
GND1
NC1
DSR
DCD
CTS
CBUS4
CBUS2
CBUS3
OSCO
OSCI
TEST
AGND
NC2
CBUS0
CBUS1
GND3
VCC
RESET
GND2
3.3VOUT
USBDM
USBDB
FT232RL
PD0/RXD
PD1/TXD
RESET/3.6B
R6
1k
C7
100nF
KPC-3216EC (RED)
R9
LED_RX
KPC-3216SGC (GREEN)
R10
LED_TX
FTDI_RESET/2.3D
C11
100nF
C12
100nF
+5V AUTO SELECTOR
MBR0520
D2
D1
VCC
UA78M05CDCY
COMMON_2
COMMON
OUTPUT
INPUT
5VREG
C1
330nF
C2
100nF
BUTTON_RESET
P$4
P$3
P$2
P$1
R7
10k
BUTTON_PROG_START
R8
10k
PC0/2.4C
BUTTON_ON_OFF
ON_OFF_BT/3.2B
JP1
JP2
JP3
JP4
MOTOR_R1
MOTOR_R2
MOTOR_L1
MOTOR_L2
C4
100nF
C6
100nF
LED_MOTOR_L1
LED_MOTOR_L2
LED_MOTOR_R1
LED_MOTOR_R2
PD5/2.4C
PD6
PB1/2.4B
PB2
R4
1k
R5
1k
R3
1k
PB5/3.6C
R2
1k
LED_POWER
LED_START
VMOT
C8
47uF
C9
47uF
C10
47uF
LV8548
VCC
IN1
IN2
IN3
IN4
OUT1
OUT2
OUT3
OUT4
GND
C14
22pF
C15
22pF
Q1
C16
100nF
AREF/3.6C
IC2
ATMEGA328AU
PC6/RESET
PB6/XTAL1
PB7/XTAL2
AREF
PC0/ADC0
PC1/ADC1
PC2/ADC2
PC3/ADC3
PC4/ADC4
PC5/ADC5
ADC6
ADC7
GND3
GND2
GND1
VCC1
VCC2
AVCC
PD0/RXD
PD1/TXD
PD2
PD3
PD4
PD5
PD6
PD7
PB0
PB1
PB2
PB3/MOSI
PB4/MISO
PB5/SCK
ATMEGA328AU/TQFP
C17
4.7uF
C18
100nF
R16
1k
R17
1k
+3V3
C13
100nF
BT_MODULE
VDD
RESET
PCM_CLK
PCM_SYNC
PCM_IN
PCM_OUT
UART_RX
UART_TX
UART_RTS
UART_CTS
USB_D-
USB_D+
SPI_CLK
SPI_CSB
SPI_MISO
SPI_MOSI
AIO0
AIO1
GPIO2
GPIO3
GPIO4
GPIO5
GPIO6
GPIO7
GPIO8
GPIO9
GPIO10
GPIO11
GND1
GND2
GND5
GND6
RN42-I/RM
D3
BAV99
R11
22k
R12
39k
R13
1k
R14
1k
R15
1k
R18
1k
R19
1k
R20
1k
LED_BT_STAT
LED_BT_CONN
BT_CONN
AUTO_DISCOVERY
BT_STAT
BAUD9600
Robot
25/01/2016 14:11:29
Sheet: 1/4

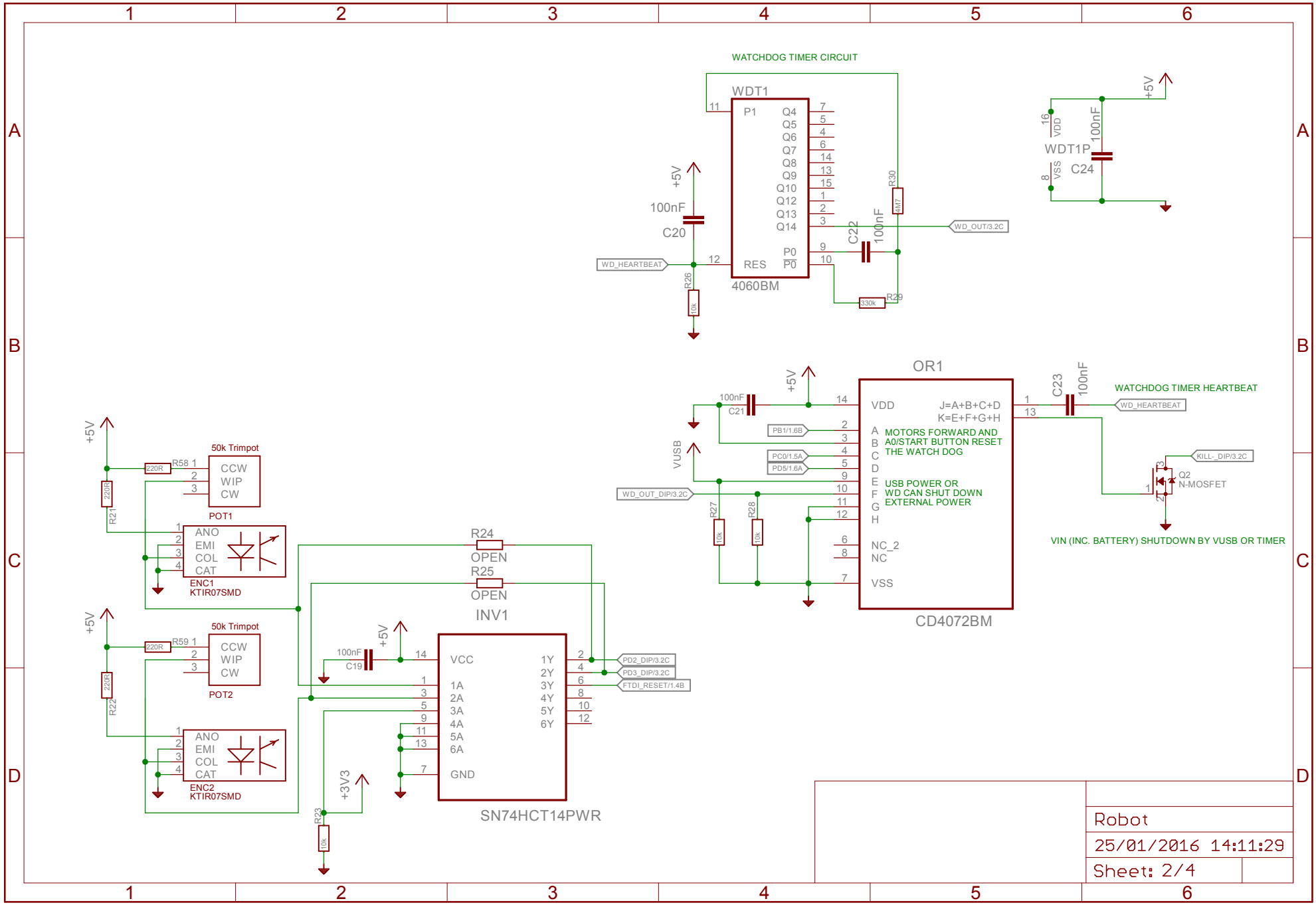
WATCHDOG TIMER CIRCUIT
WDT1
P1
Q4
Q5
Q6
Q7
Q8
Q9
Q10
Q12
Q13
Q14
P0
RES
4060BM
+5V
100nF
C20
WD_HEARTBEAT
R26
10k
R30
4k7
C22
100nF
WD_OUT/3.2C
R29
330k
VDD
VSS
WDT1P
C24
OR1
VDD
J=A+B+C+D
K=E+F+G+H
MOTORS FORWARD AND
A0/START BUTTON RESET
THE WATCH DOG
USB POWER OR
WD CAN SHUT DOWN
EXTERNAL POWER
NC_2
NC
VSS
CD4072BM
C21
PB1/1.6B
PC0/1.5A
PD5/1.6A
VUSB
WD_OUT_DIP/3.2C
R27
R28
C23
WATCHDOG TIMER HEARTBEAT
KILL-_DIP/3.2C
Q2
N-MOSFET
VIN (INC. BATTERY) SHUTDOWN BY VUSB OR TIMER
50k Trimpot
CCW
WIP
CW
POT1
ANO
EMI
COL
CAT
ENC1
KTIR07SMD
R58
220R
R21
R24
OPEN
R25
OPEN
INV1
VCC
1A
2A
3A
4A
5A
6A
GND
1Y
2Y
3Y
4Y
5Y
6Y
SN74HCT14PWR
C19
PD2_DIP/3.2C
PD3_DIP/3.2C
FTDI_RESET/1.4B
R59
POT2
ENC2
KTIR07SMD
R22
+3V3
R23
Robot
25/01/2016 14:11:29
Sheet: 2/4

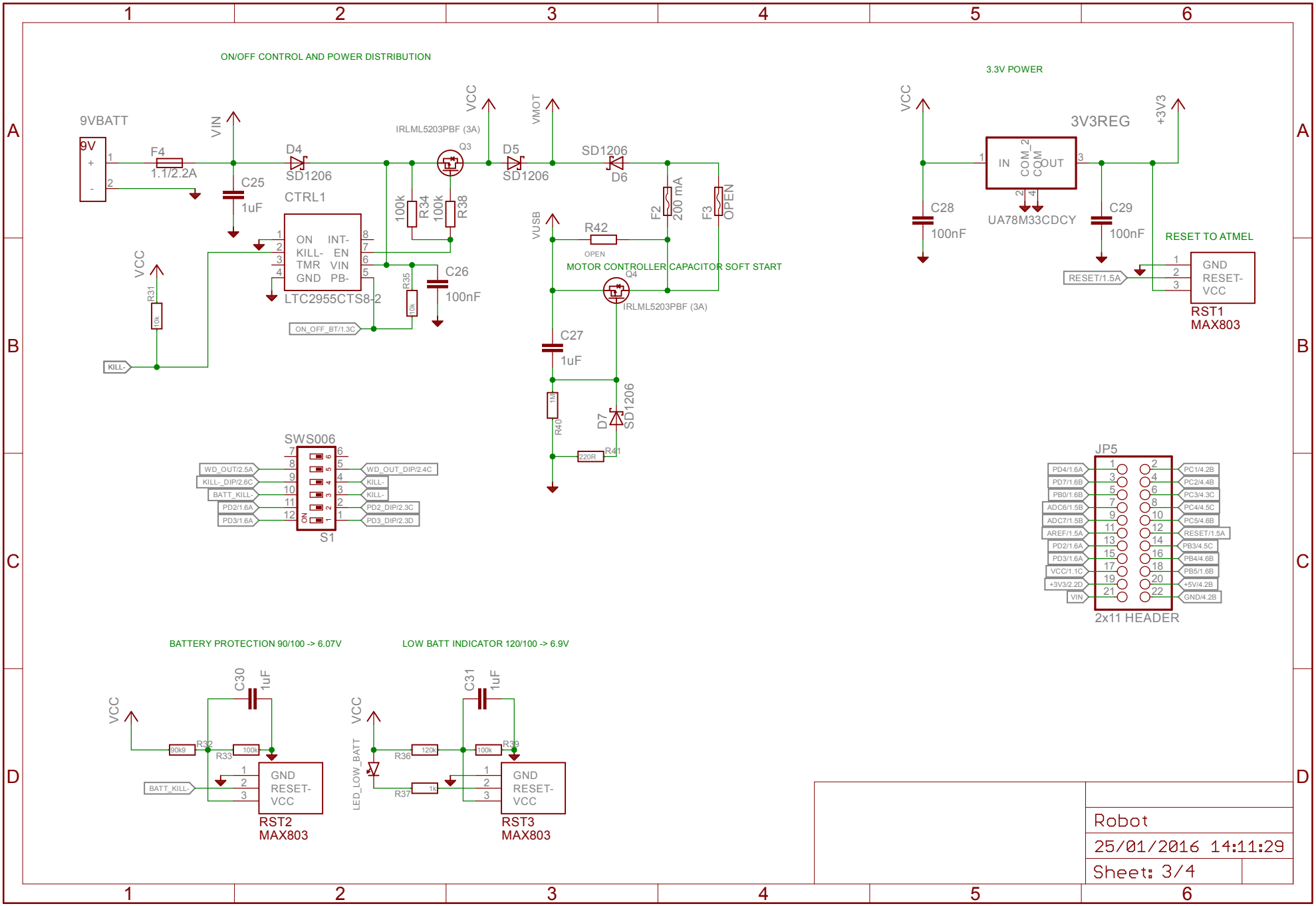
ON/OFF CONTROL AND POWER DISTRIBUTION
9VBATT
9V
F4
1.1/2.2A
VIN
C25
1uF
D4
SD1206
CTRL1
ON
KILL-
TMR
GND
INT-
EN
VIN
PB-
LTC2955CTS8-2
ON_OFF_BT/1.3C
VCC
R31
10k
KILL-
R35
10k
C26
100nF
IRLML5203PBF (3A)
Q3
100k
R34
100k
R38
VCC
D5
SD1206
VMOT
SD1206
D6
F2
200 mA
F3
OPEN
VUSB
R42
OPEN
MOTOR CONTROLLER CAPACITOR SOFT START
Q4
IRLML5203PBF (3A)
C27
1uF
R40
1M
D7
SD1206
R41
220R
3.3V POWER
VCC
3V3REG
IN
COM_2
COM
OUT
UA78M33CDCY
+3V3
C28
100nF
C29
100nF
RESET TO ATMEL
RESET/1.5A
GND
RESET-
VCC
RST1
MAX803
SWS006
WD_OUT/2.5A
KILL-_DIP/2.6C
BATT_KILL-
PD2/1.6A
PD3/1.6A
WD_OUT_DIP/2.4C
KILL-
KILL-
PD2_DIP/2.3C
PD3_DIP/2.3D
S1
JP5
PD4/1.6A
PD7/1.6B
PB0/1.6B
ADC6/1.5B
ADC7/1.5B
AREF/1.5A
PD2/1.6A
PD3/1.6A
VCC/1.1C
+3V3/2.2D
VIN
PC1/4.2B
PC2/4.4B
PC3/4.3C
PC4/4.5C
PC5/4.6B
RESET/1.5A
PB3/4.5C
PB4/4.6B
PB5/1.6B
+5V/4.2B
GND/4.2B
2x11 HEADER
BATTERY PROTECTION 90/100 -> 6.07V
VCC
C30
1uF
90k9
R32
R33
100k
BATT_KILL-
GND
RESET-
VCC
RST2
MAX803
LOW BATT INDICATOR 120/100 -> 6.9V
VCC
C31
1uF
LED_LOW_BATT
R36
120k
R37
1k
100k
R39
GND
RESET-
VCC
RST3
MAX803
Robot
25/01/2016 14:11:29
Sheet: 3/4

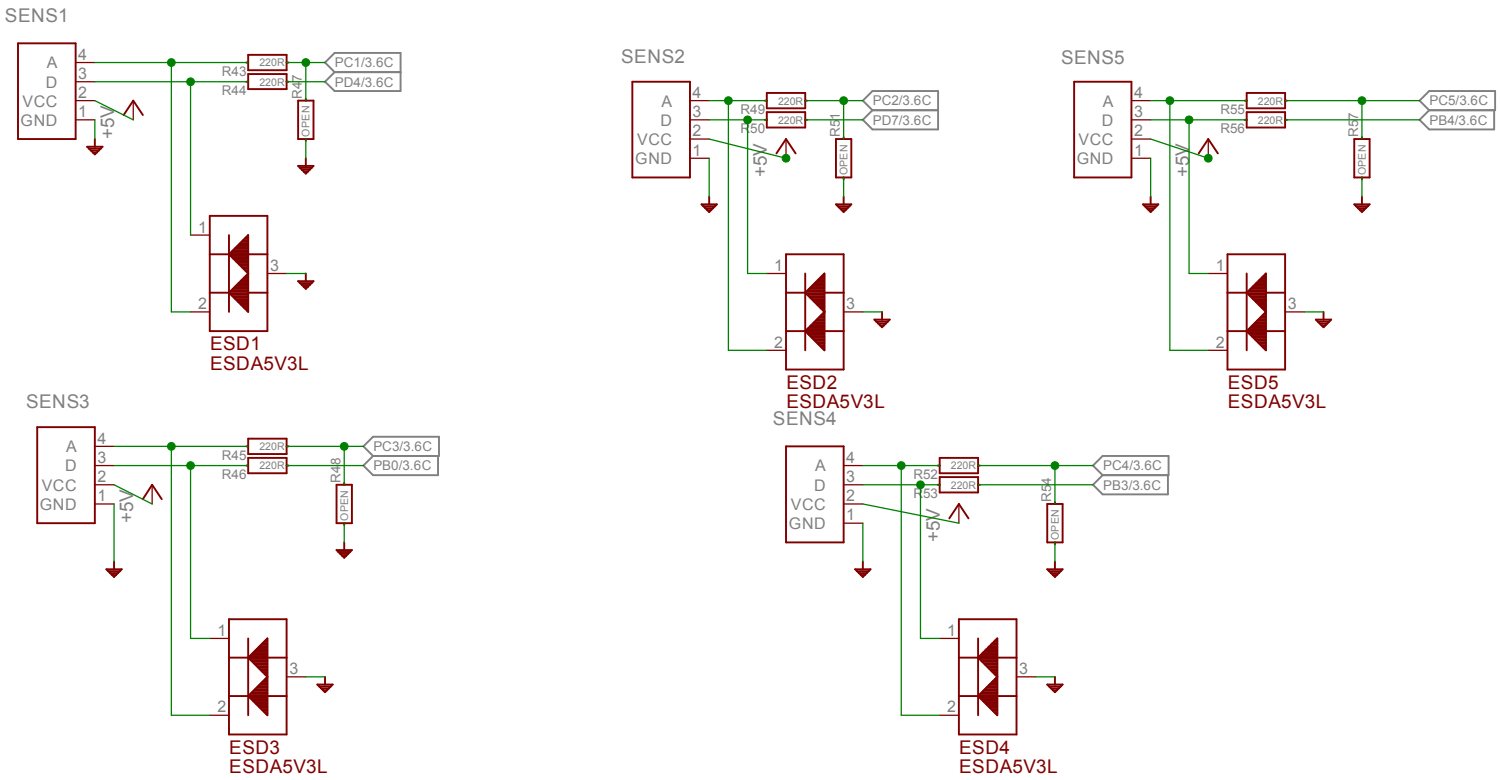

Robot

25/01/2016 14:11:29

Sheet: 4/4