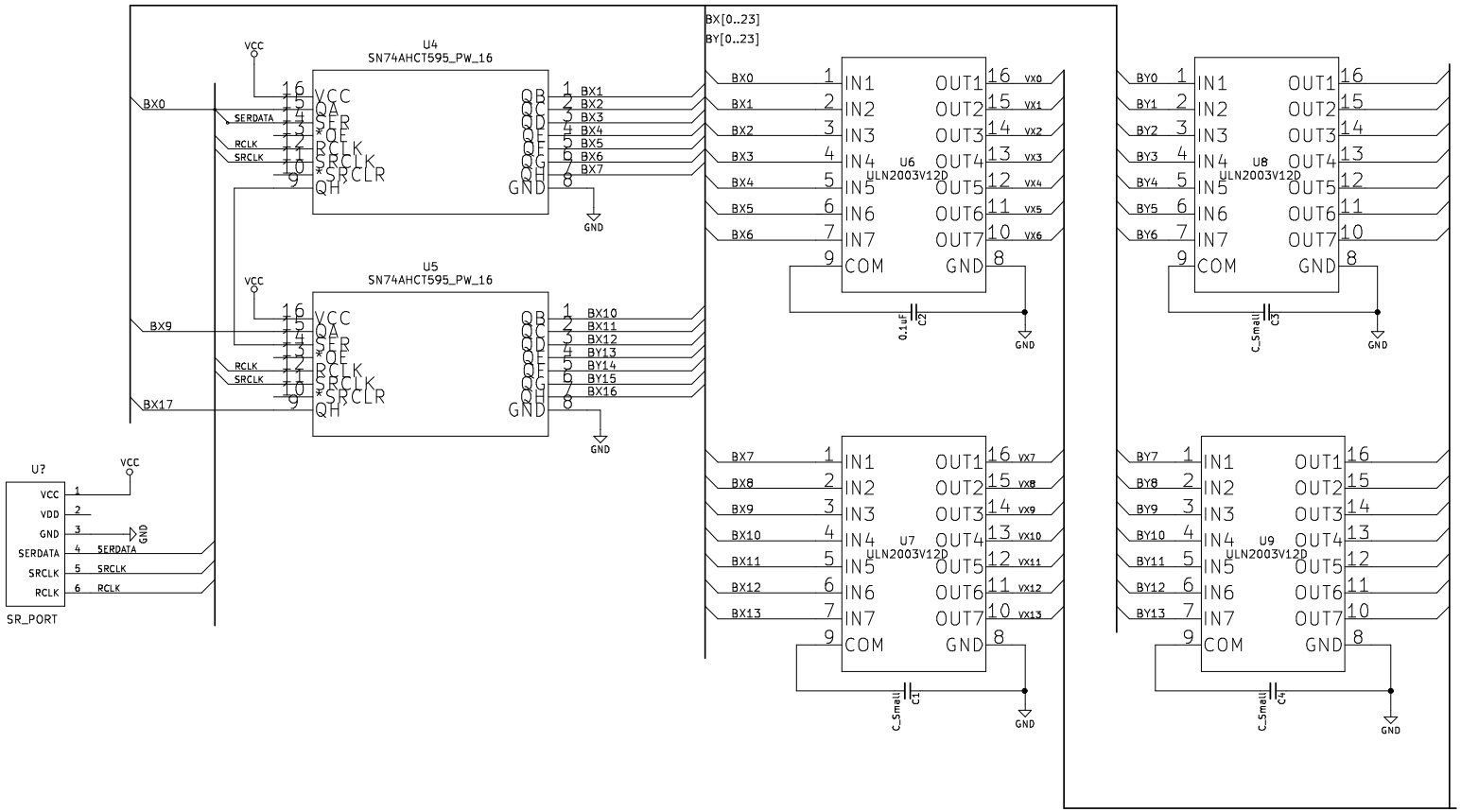

Cendit

Sheet: /

File: PortExpanderShiftRegister.sch

Title: CenditBoard 11713 [modelo reducido]

Size: User	Date: 16 aug 2017	**Rev: rev 1**
KiCad E.D.A. kicad 4.0.5+dfsg1-4bpo8+1		Id: 1/1