Indecision and Delay Are the Parents of Failure

– Towards formal methods for distributed & feedback systems –

Martin Fränzle [1]

jointly with

Thomas Møller Grosen [2], Paul Kröger [1], Kim Guldstrand Larsen [2], Liang Zou [3 1], Mingshuai Chen [4 3 1], Peter Nazier Mosaad [1], Naijun Zhan [3], Xue Bai [3 1], Sarah Winter [5], Yangjia Li [3 1], Martin Zimmermann [2]

[1] Department of Computer Science, Carl v. Ossietzky Universität Oldenburg, Germany
[2] Department of Computer Science, Aalborg University, Aalborg, Denmark
[3] State Key Laboratory of Computer Science, Institute of Software, CAS, Beijing, China
[4] College of Computer Science and Technology, Zhejiang University, Hangzhou, China
[5] Université Paris Cité, Paris, France

Advice by a Wise Man

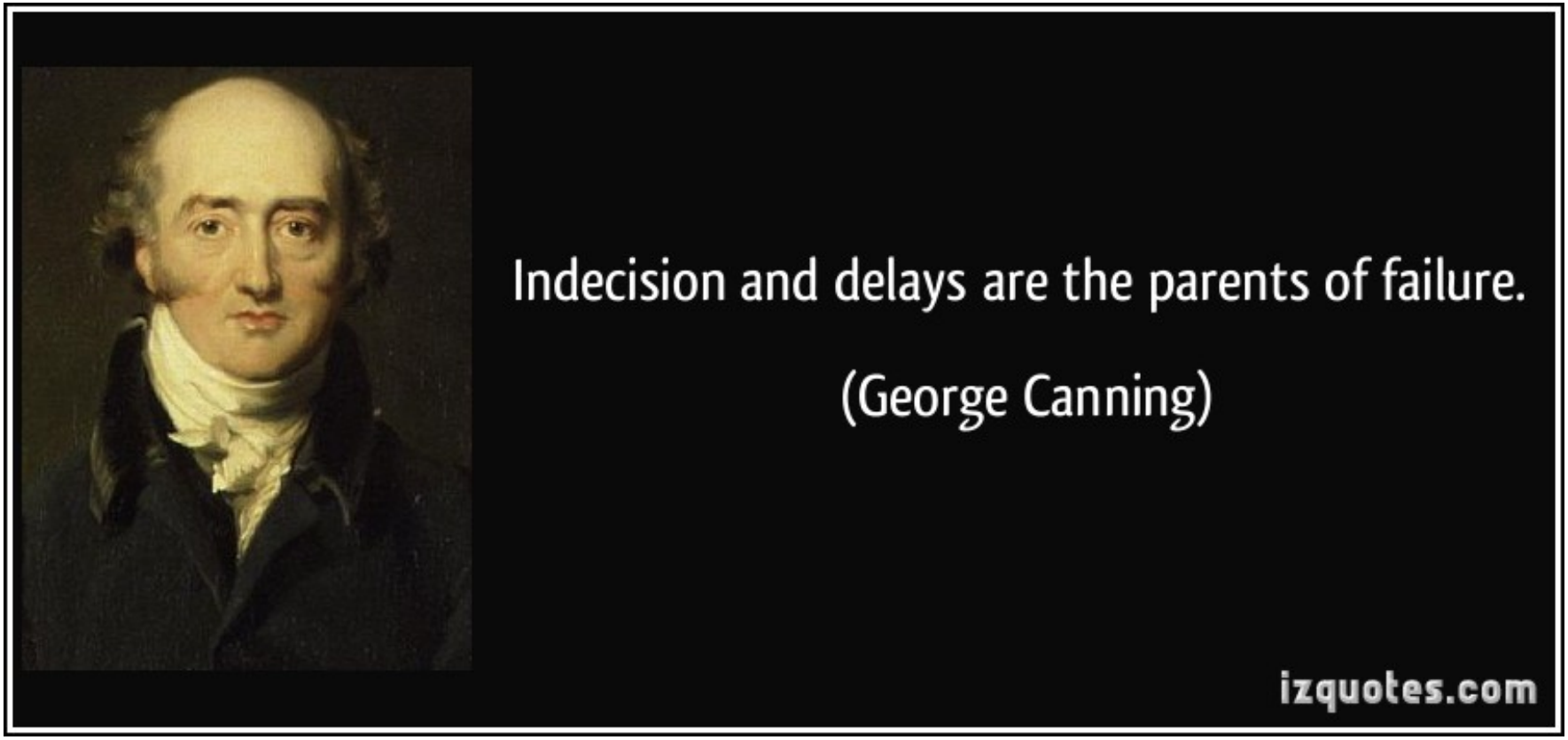

Advice by a Wise Man

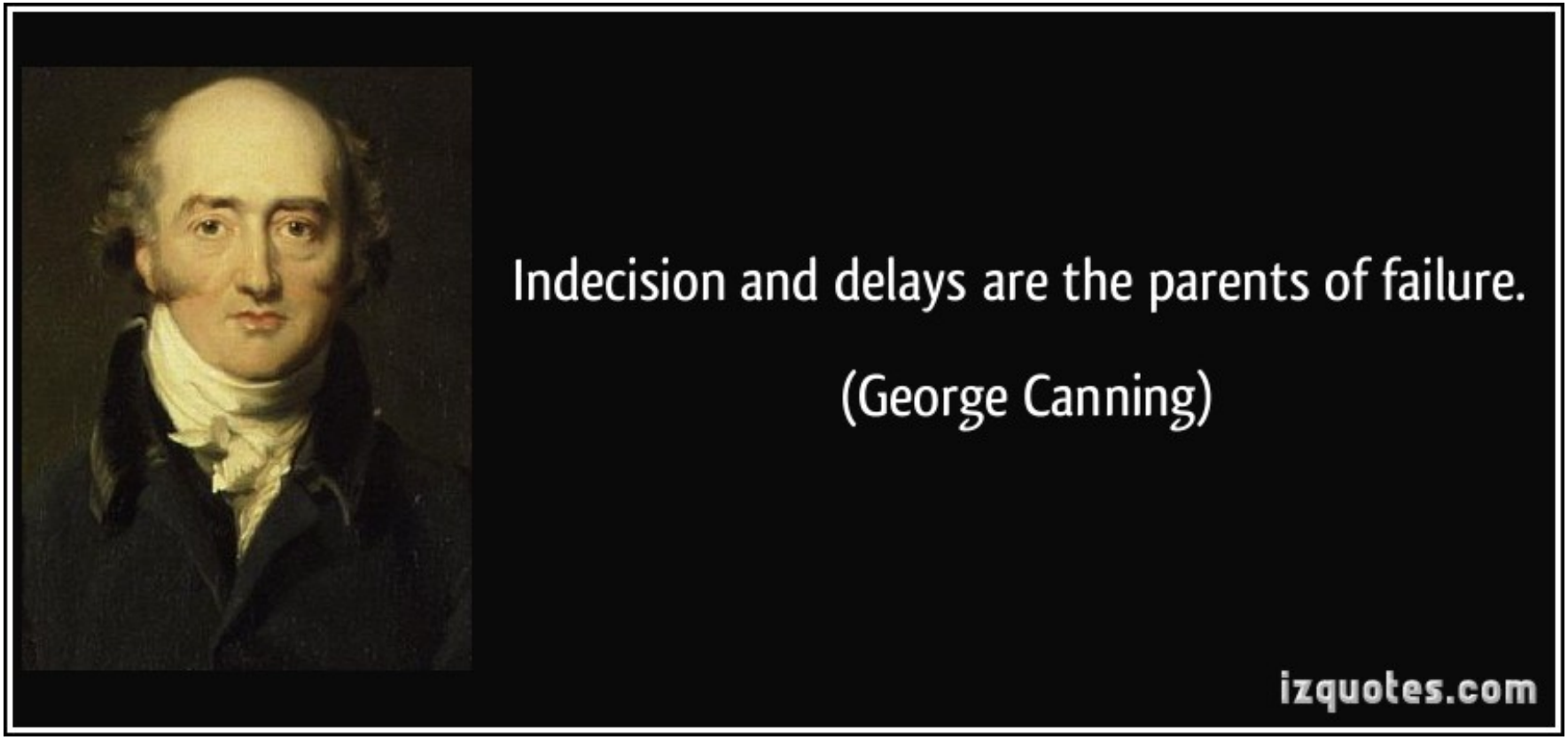

- Only relevant to politicians?
- Or to computer science and control folks, too?

Hybrid Systems

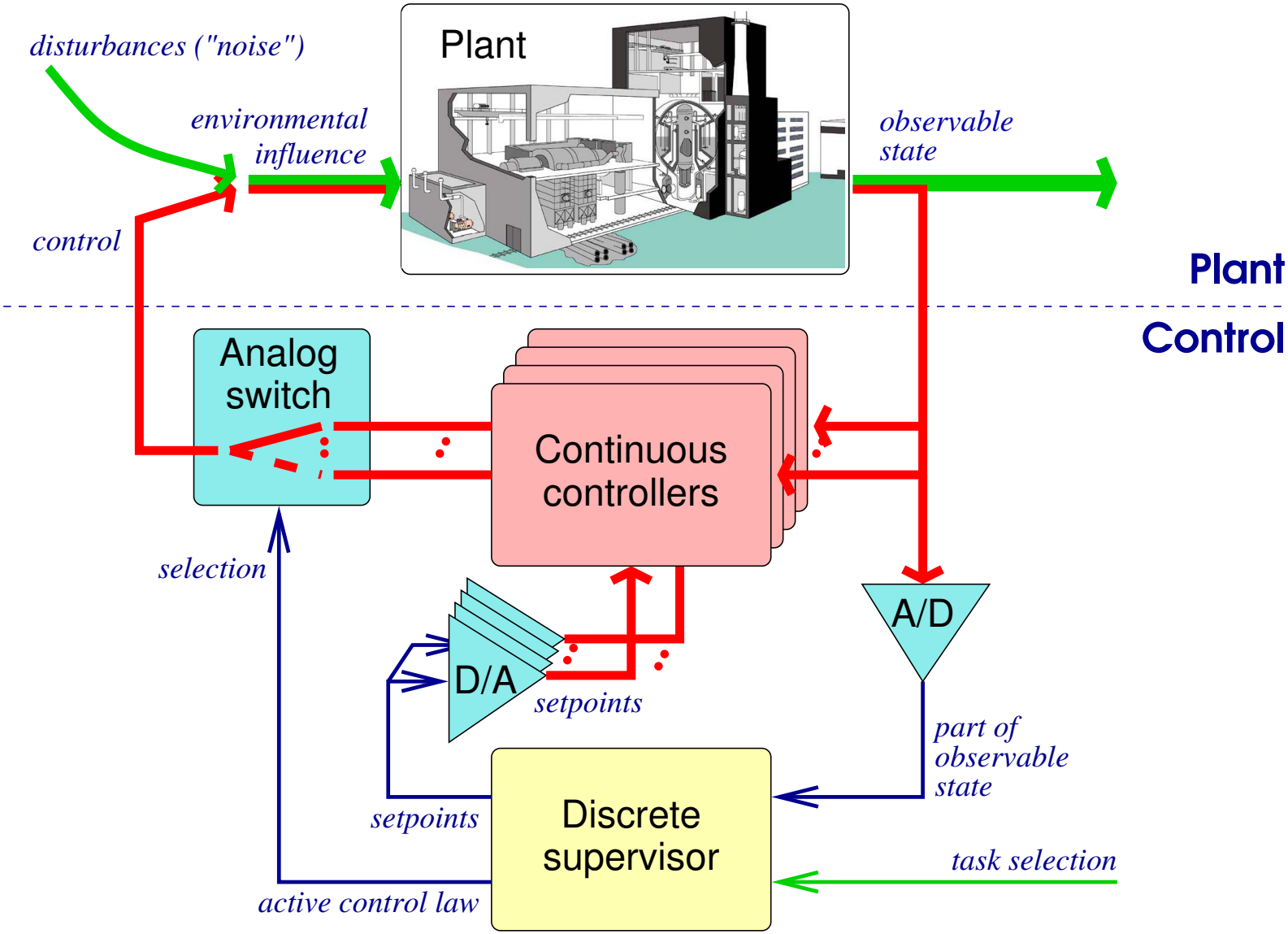

Hybrid Systems

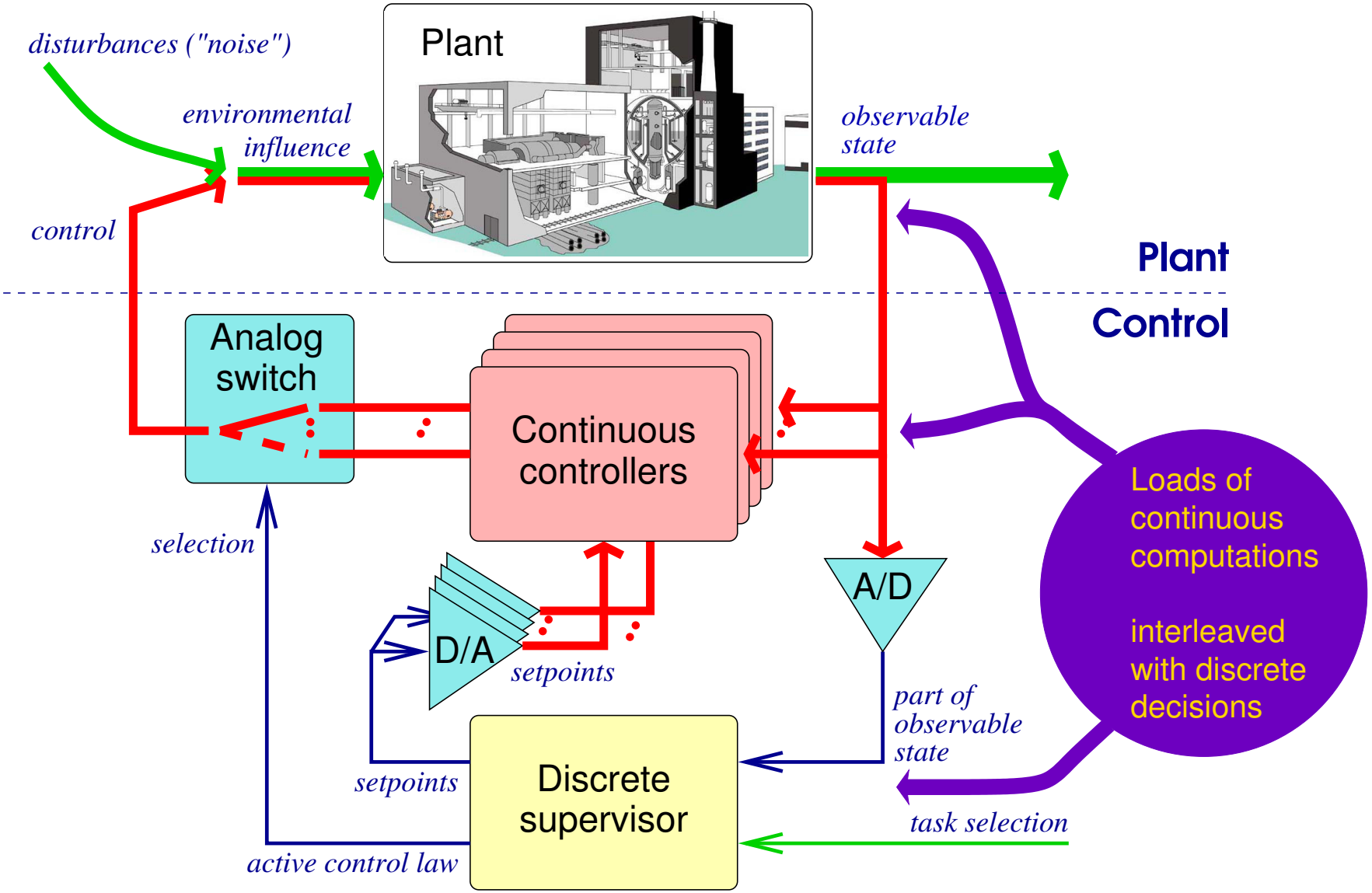

Hybrid Systems

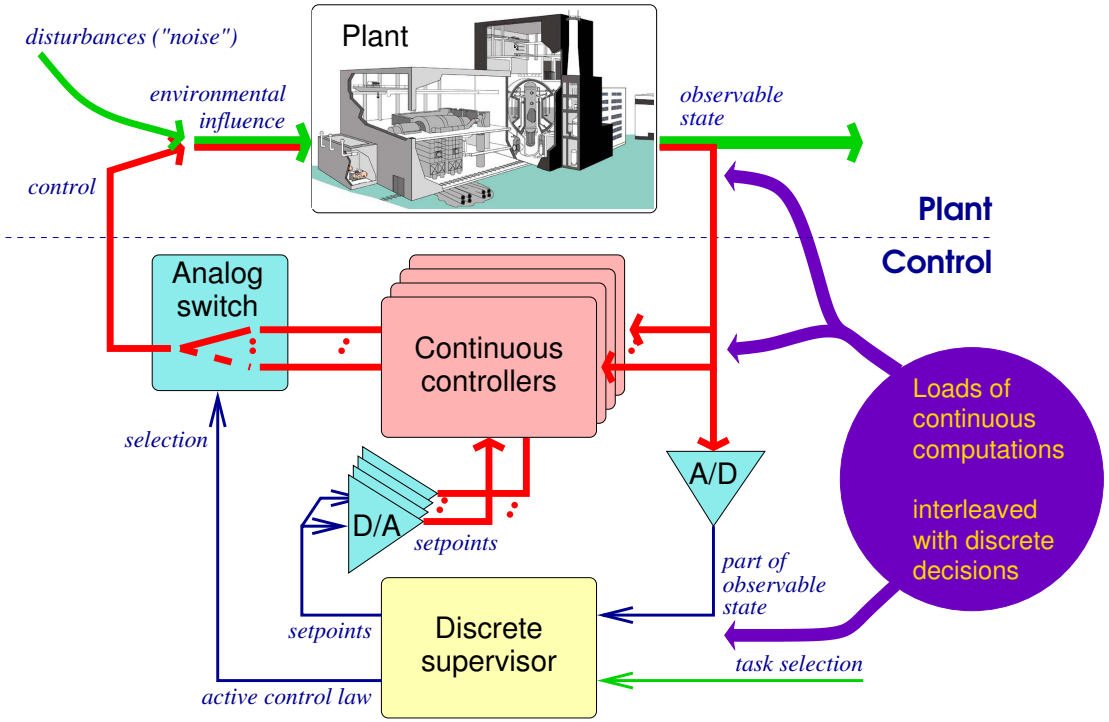

Crucial question:

- How do the controller and the plant interact?

Traditional answer (esp. in formal methods for hybrid systems):

- Coupling assumed to be (or at least modeled as) delay-free.

$\Rightarrow$ Mode dynamics is covered by the conjunction of the individual ODEs.

$\Rightarrow$ Switching btw. modes is an immediate reaction to environmental conditions.

Instantaneous Coupling

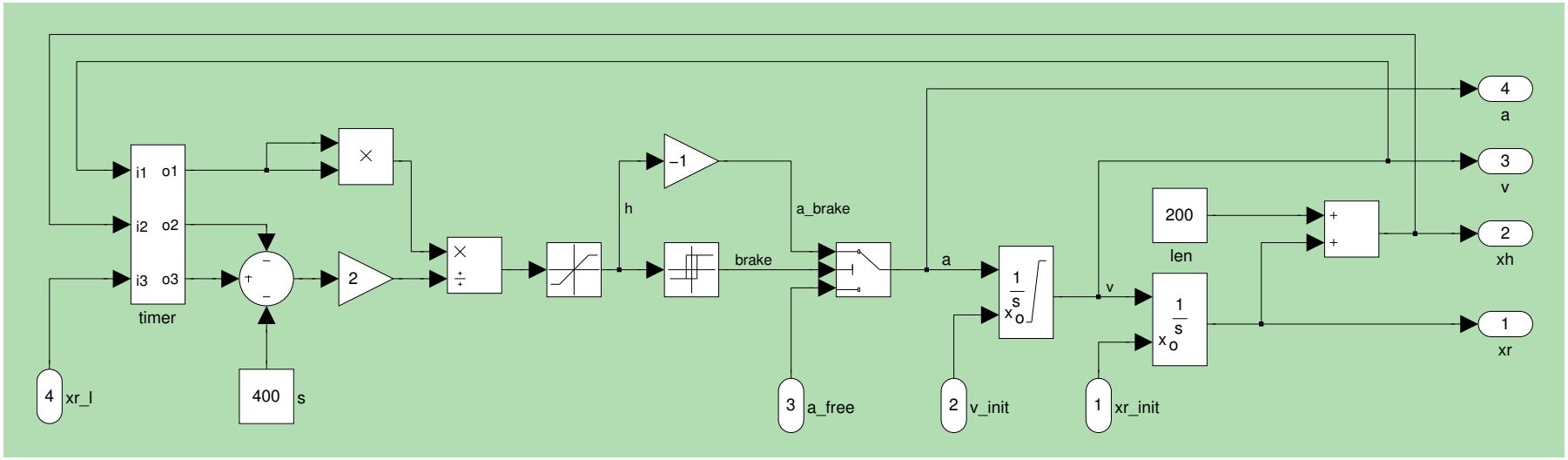

Following the tradition, above (rather typical) Simulink model assumes

- delay-free coupling between all components,
- instantaneous feed-through within all functional blocks.

Central questions:

1. Is this realistic?
2. If not, does it have observable effect on control performance?
3. May that effect be detrimental or even harmful?

Q1: Is Instantaneous Coupling Realistic?

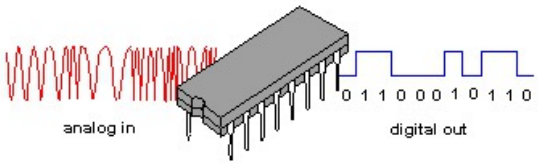

Digital control needs A/D and D/A conversion as well as processing time, which induce latencies in signal forwarding.

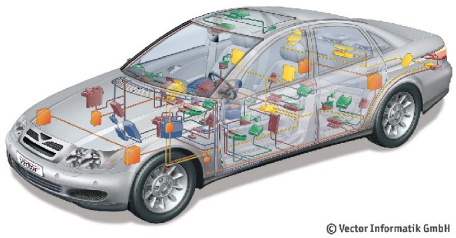

Networked control introduces communication latency into the feedback control loop.

Harvesting, fusing, and forwarding data through sensor networks enlarge the latter by orders of magnitude.

Q1: Is Instantaneous Coupling Realistic?

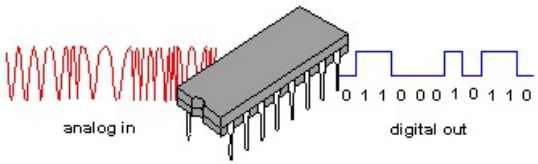

Digital control needs A/D and D/A conversion as well as processing time, which induce latencies in signal forwarding.

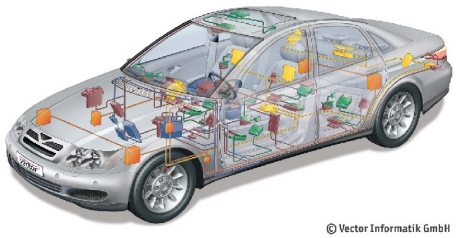

Networked control introduces communication latency into the feedback control loop.

Harvesting, fusing, and forwarding data through sensor networks enlarge the latter by orders of magnitude.

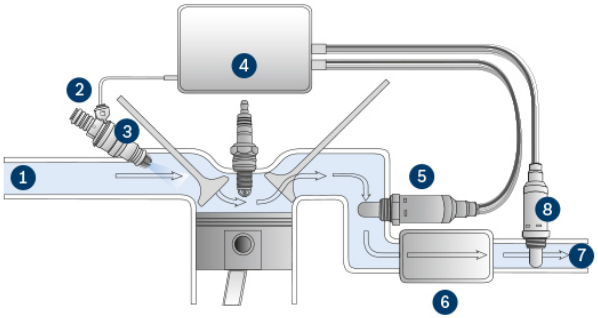

Physical transport delays from actuation to the controlled process and from the process to sensor equipment arise in many control applications.

Q1: Is Instantaneous Coupling Realistic?

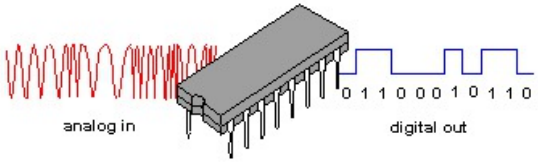

Digital control needs A/D and D/A conversion as well as processing time, which induce latencies in signal forwarding.

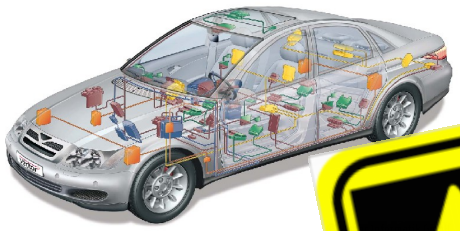

Net[illegible] luces communication [illegible] control loop.

[illegible] rding data through [illegible] latter by orders of [illegible]

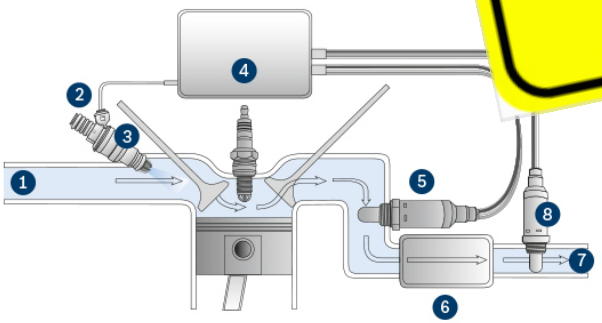

Physical transport delays from actuation to the controlled process and from the process to sensor equipment arise in many control applications.

Q2: Do Delays Have Observable Effect?

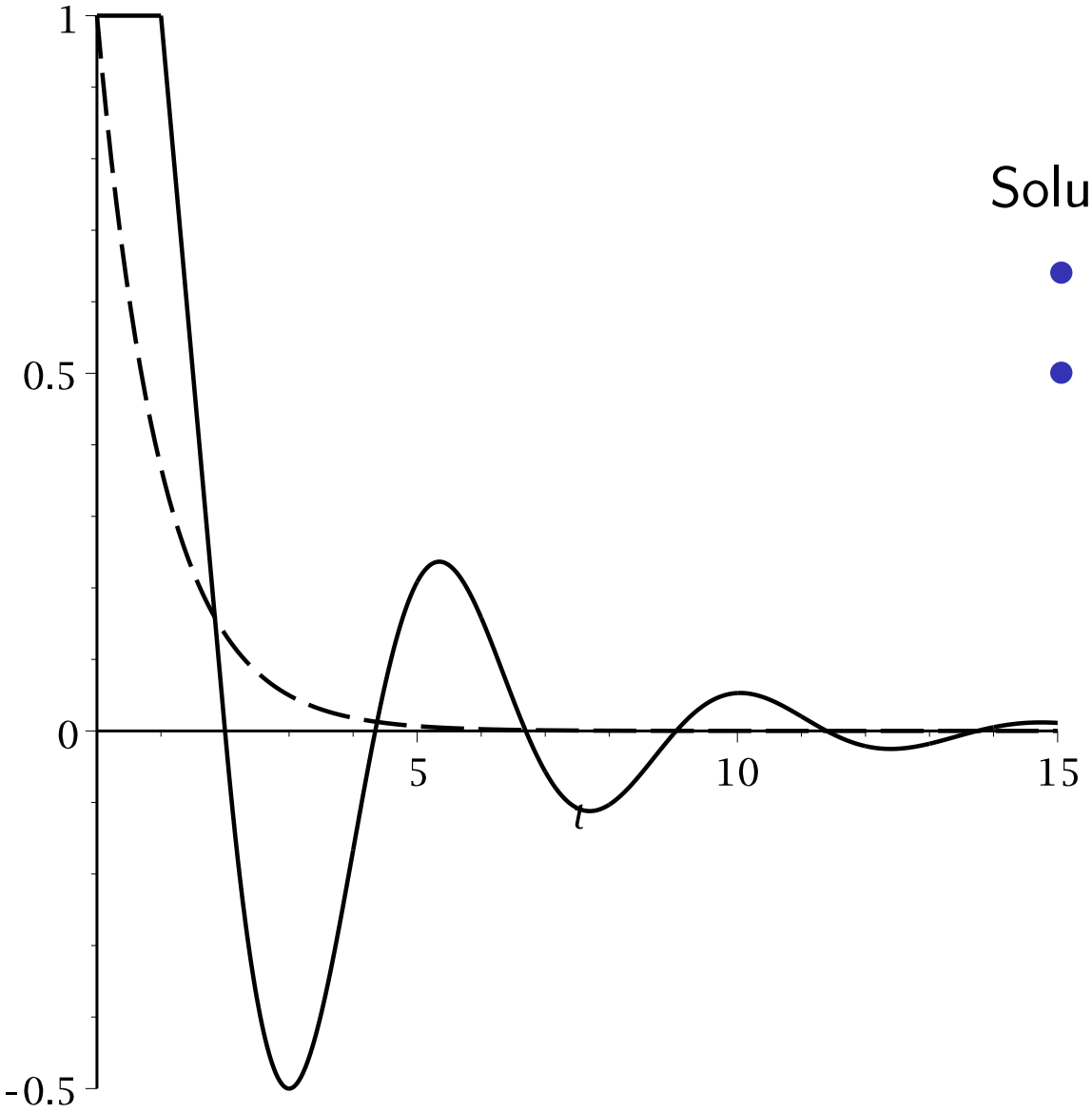

Solutions to

- ODE $\frac{\mathrm{d}}{\mathrm{d}t}x(t) = -x(t)$,
- DDE $\frac{\mathrm{d}}{\mathrm{d}t}x(t) = -x(t-1)$.

Q2: Do Delays Have Observable Effect?

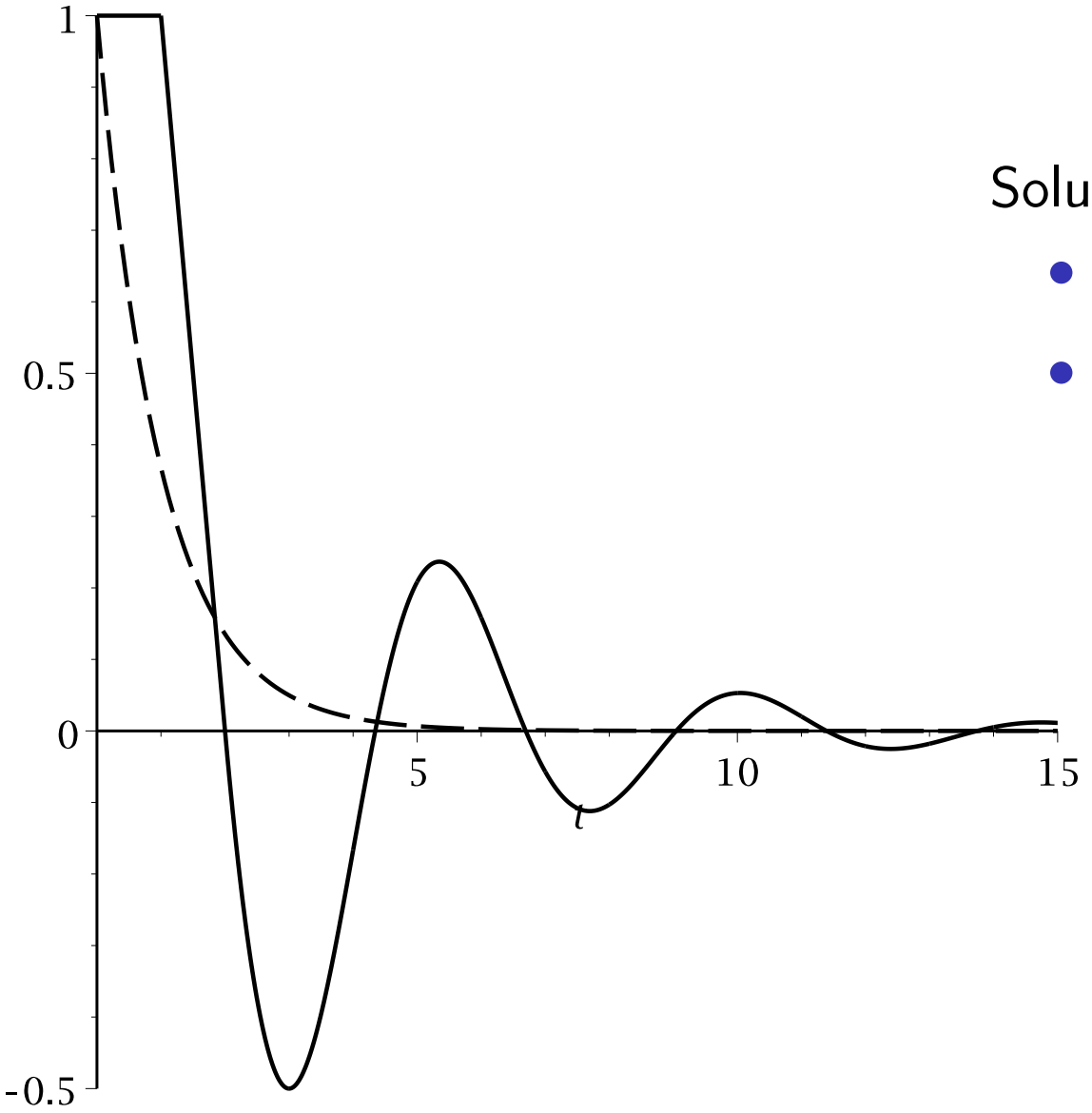

Solutions to

- ODE $\frac{\mathrm{d}}{\mathrm{d}t}x(t) = -x(t)$,
- DDE $\frac{\mathrm{d}}{\mathrm{d}t}x(t) = -x(t-1)$.

Yes, they have!

Q3: May the Effects be Harmful?

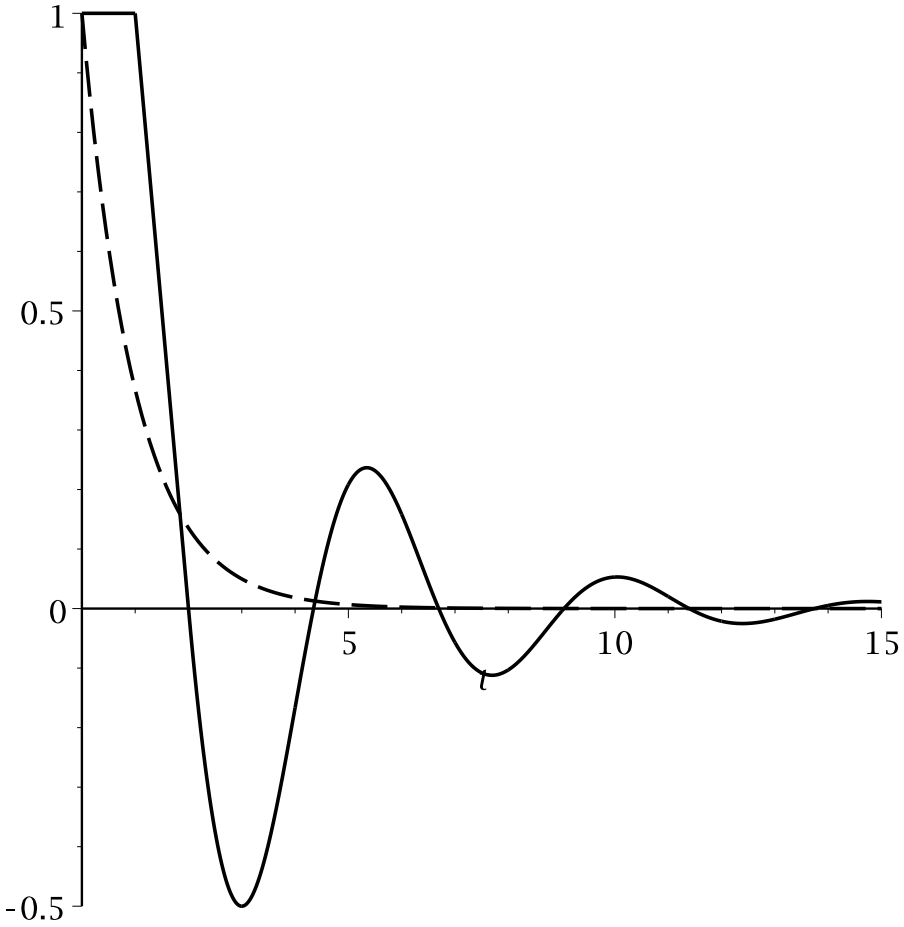

Delays in feedback may lead to

- reachability of otherwise unreachable —potentially harmful— states,
- destabilisation of otherwise stable systems,
- degradation of globally stable systems into only locally stable ones,
- introduction of persistent residual error in feedback control.

Q3: May the Effects be Harmful?

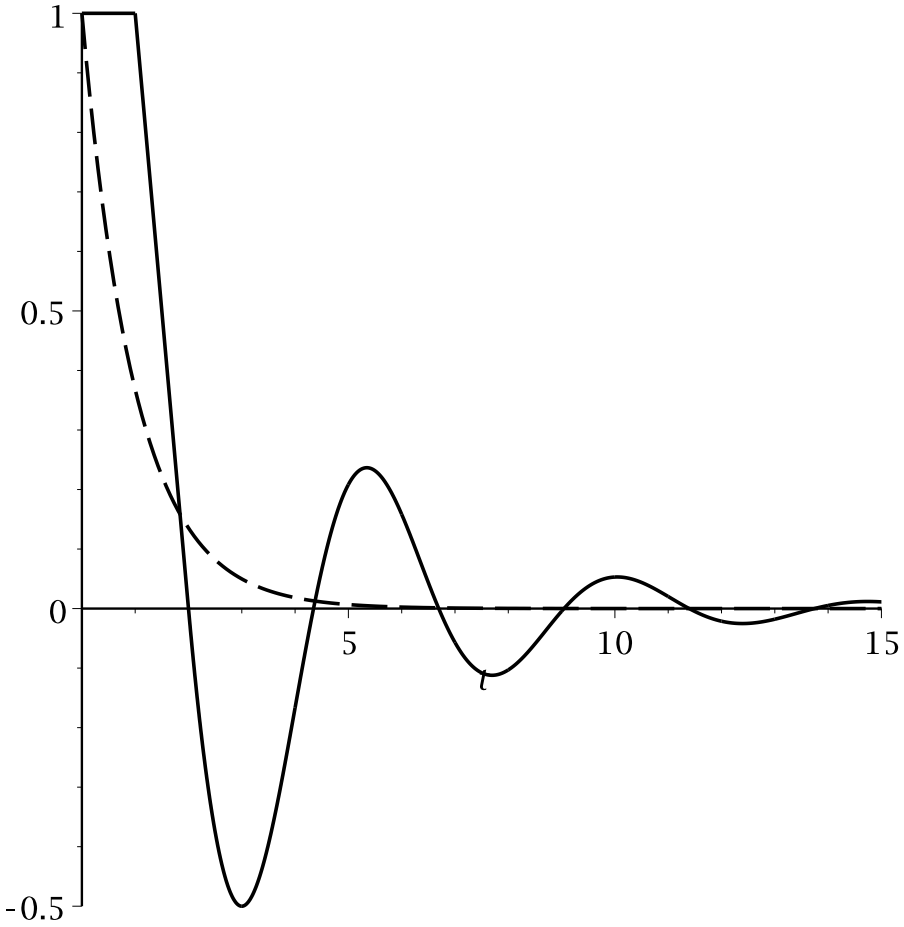

Delays in feedback may lead to

- reachability of otherwise unreachable —potentially harmful— states,
- destabilisation of otherwise stable systems,
- degradation of globally stable systems into only locally stable ones,
- introduction of persistent residual error in feedback control.

Yes, delays may well annihilate control performance.

The Agenda

1. Discrete **safety games under delay**
   - Delayed observation and actuation
   - Reducibility to standard safety games
   - Incremental handling of delays
2. **Delay differential equations**
   - Why they originate from Pandorra's box
   - Safe reduction to discrete-time systems

Discrete Safety Games

Staying safe and reaching an objective
when observation & actuation is confined by delays

Staying Safe

when Observation and Influence Suffer from Serious Delays

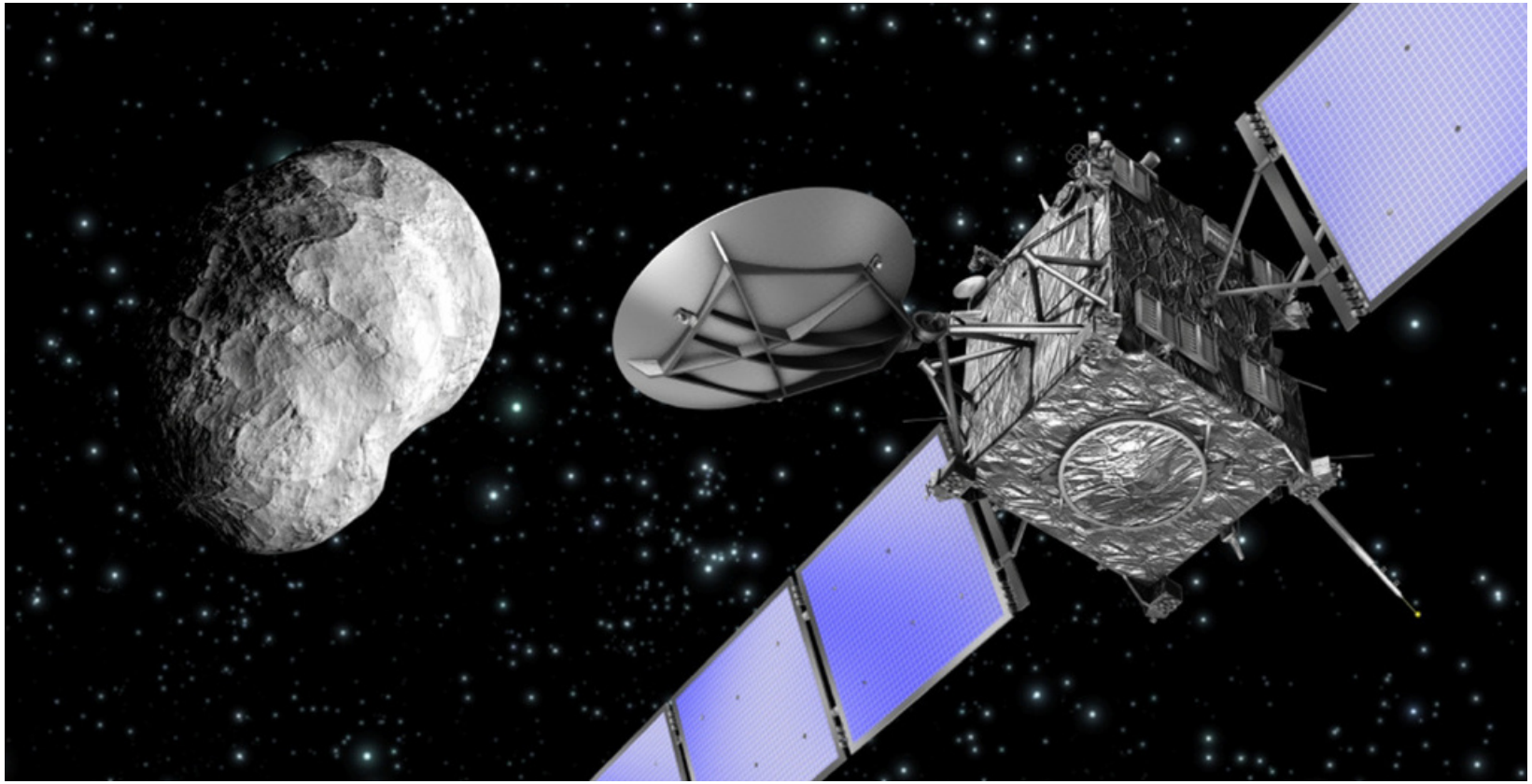

©ESA

- You could move slowly. (Well, can you?)
- You could trust autonomy.
- Or you have to anticipate and issue actions early.

A Trivial Safety Game

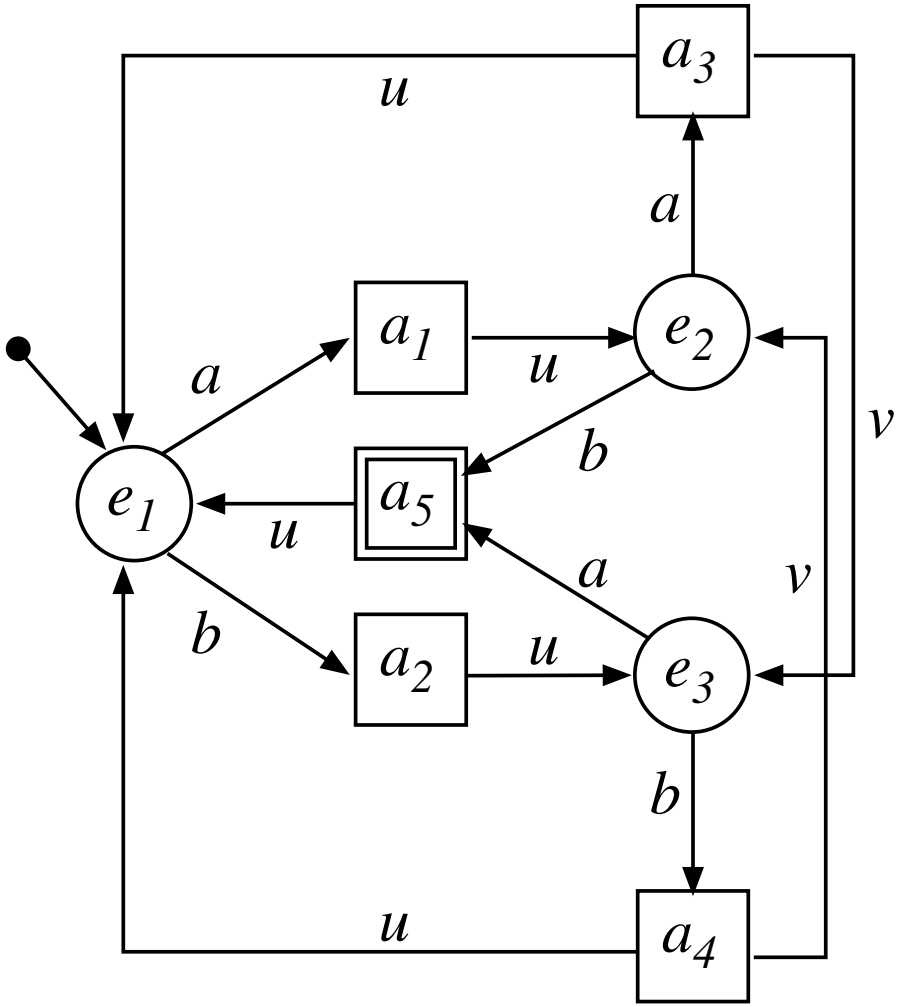

Goal: Avoid a_5 by appropriate actions of player e.

A Trivial Safety Game

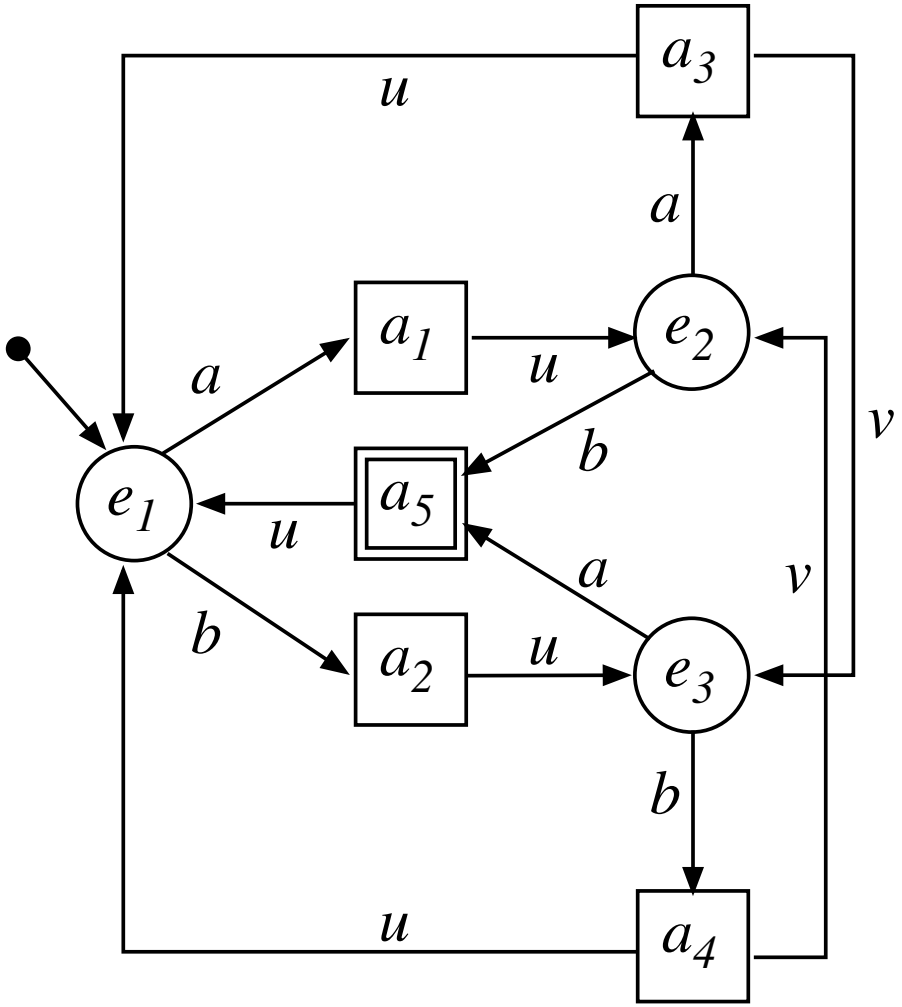

Goal: Avoid a_5 by appropriate actions of player e.

Strategy: May always play "a" except in e_3:

$$\begin{aligned} e_1, e_2 &\mapsto a \\ e_3 &\mapsto b \end{aligned}$$

Playing Subject to Discrete Delay

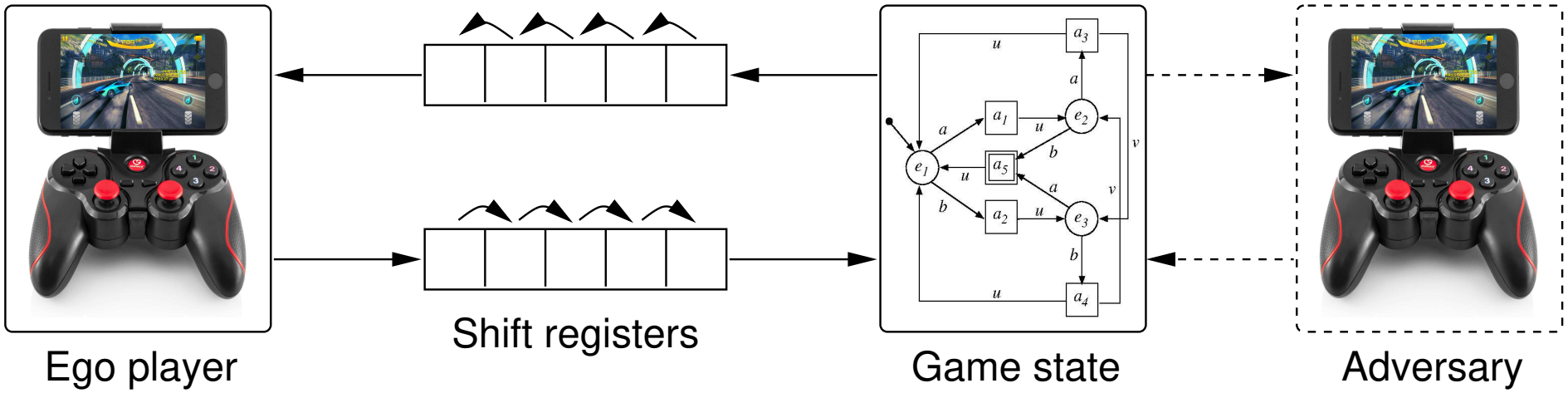

Observation: It doesn't make an observable difference for the joint dynamics whether delay occurs in perception, actuation, or both.

1

Playing Subject to Discrete Delay

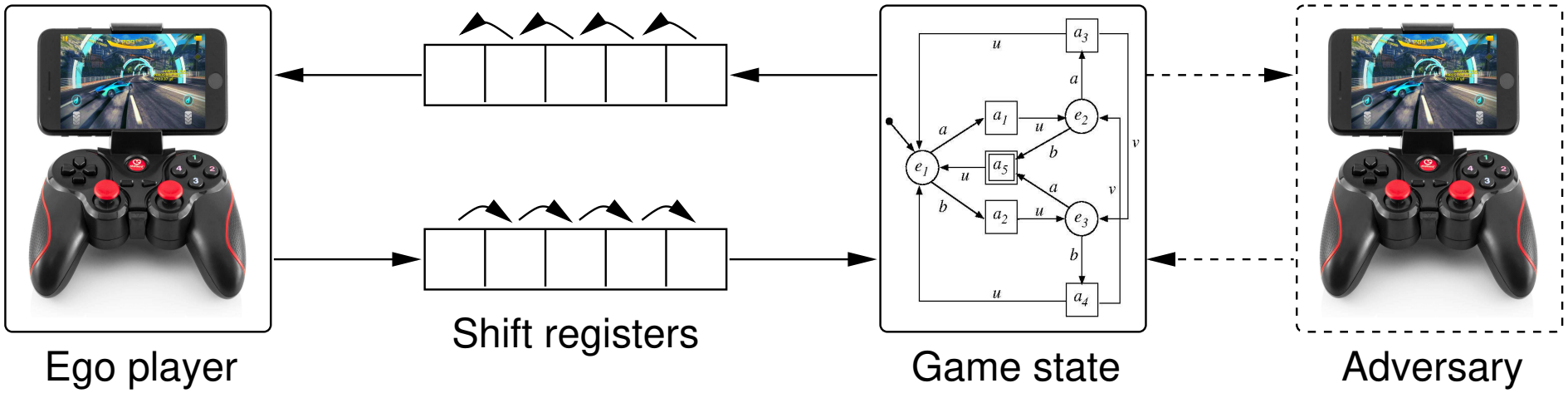

Observation: It doesn't make an observable difference for the joint dynamics whether delay occurs in perception, actuation, or both.

Consequence: There is an[1] obvious reduction to a safety game of perfect information.

[1] In fact, two different ones: The two players have imperfect introspection into their mutual states, *thus play an indetermined game!*

The Reduction

from Ego-Player Perspective

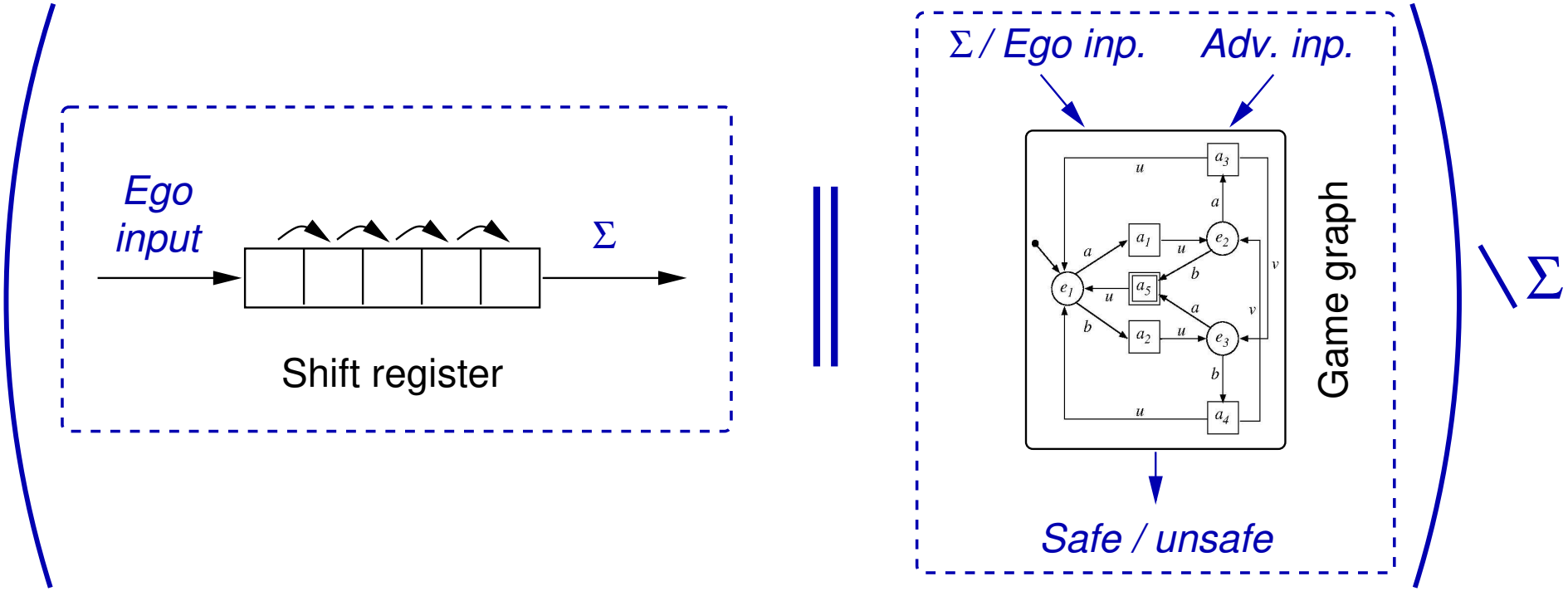

The Reduction

from Ego-Player Perspective

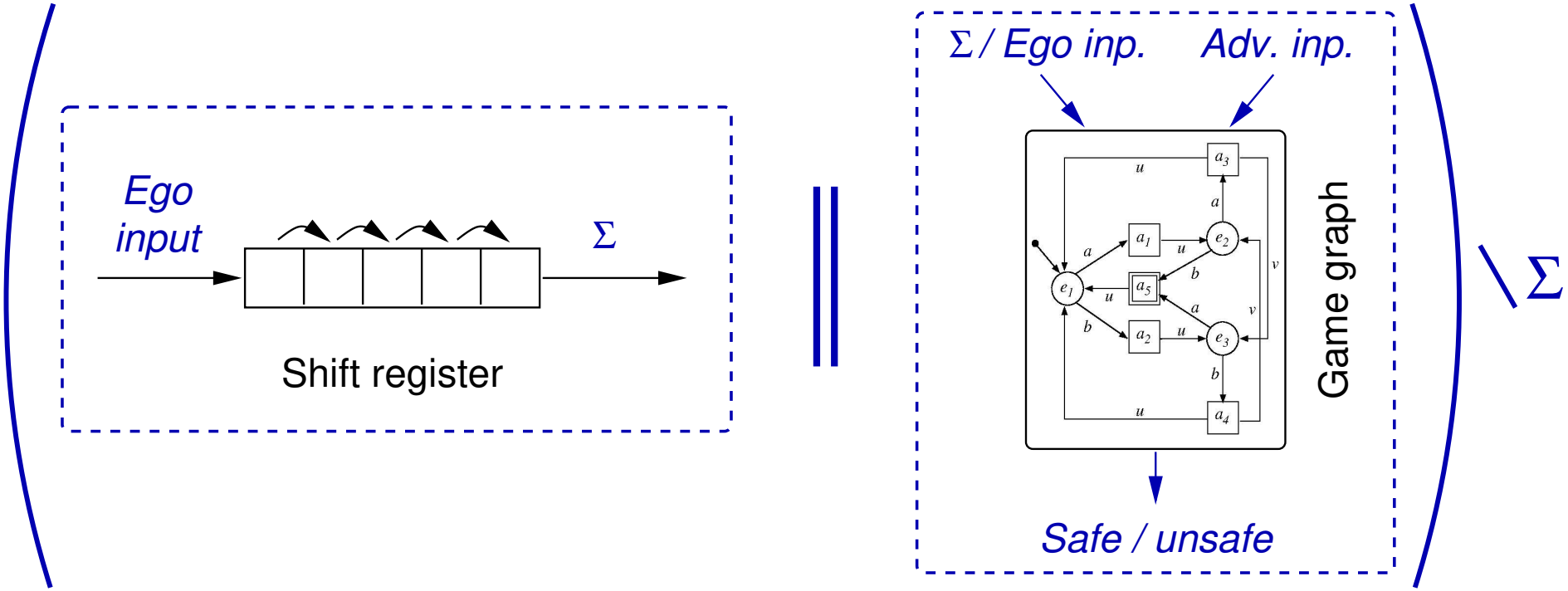

- Safety games w. delay can be solved algorithmically.
- Game graph incurs blow-up by factor $|\text{Alphabet(ego)}|^{\text{delay}}$.

The Simple Safety Game

...but with Delay

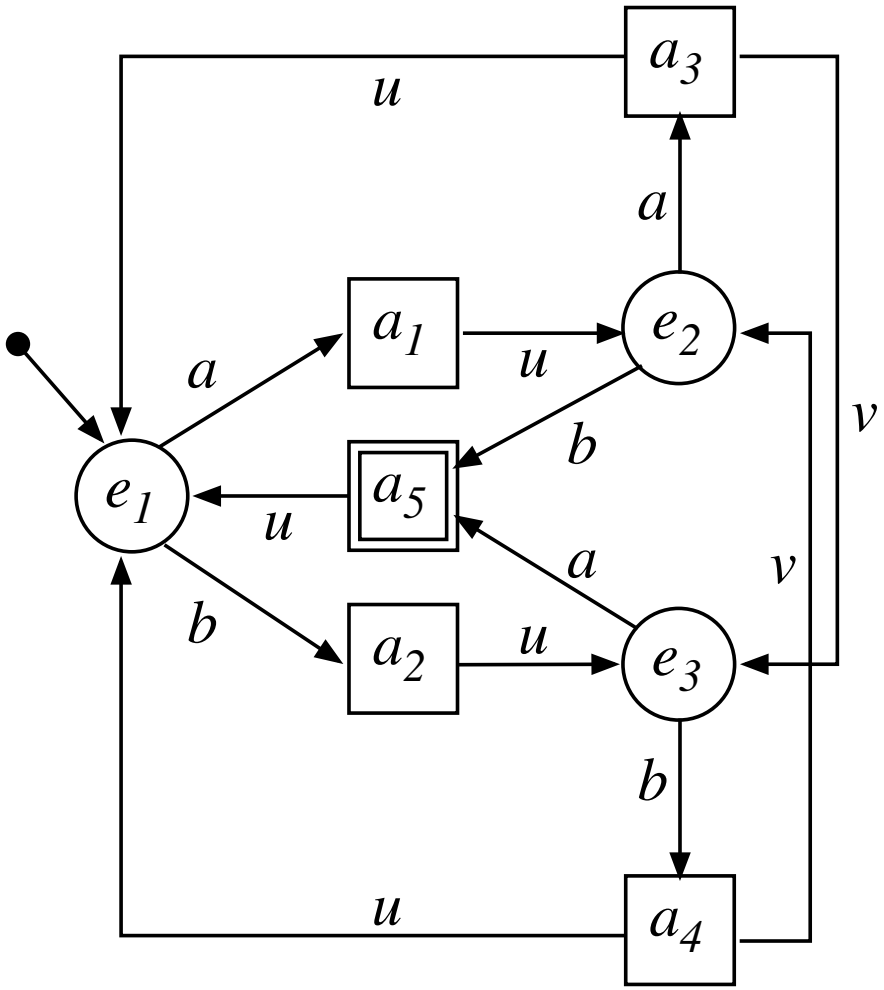

No delay:

$$e_1, e_2 \mapsto a$$
$$e_3 \mapsto b$$

1 step delay: Strategy?

The Simple Safety Game

...but with Delay

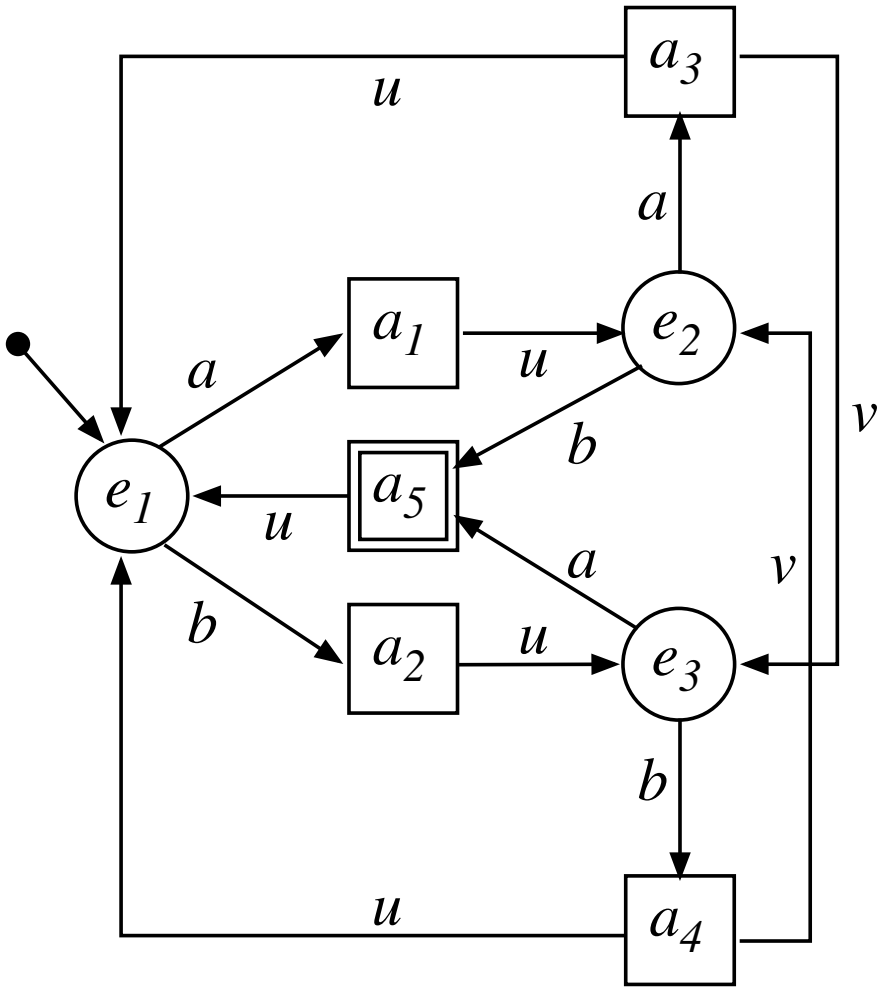

No delay:

$$e_1, e_2 \mapsto a$$
$$e_3 \mapsto b$$

1 step delay: Strategy?

$$a_1, a_4, \mapsto a$$
$$a_2, a_3 \mapsto b$$

The Simple Safety Game

...but with Delay

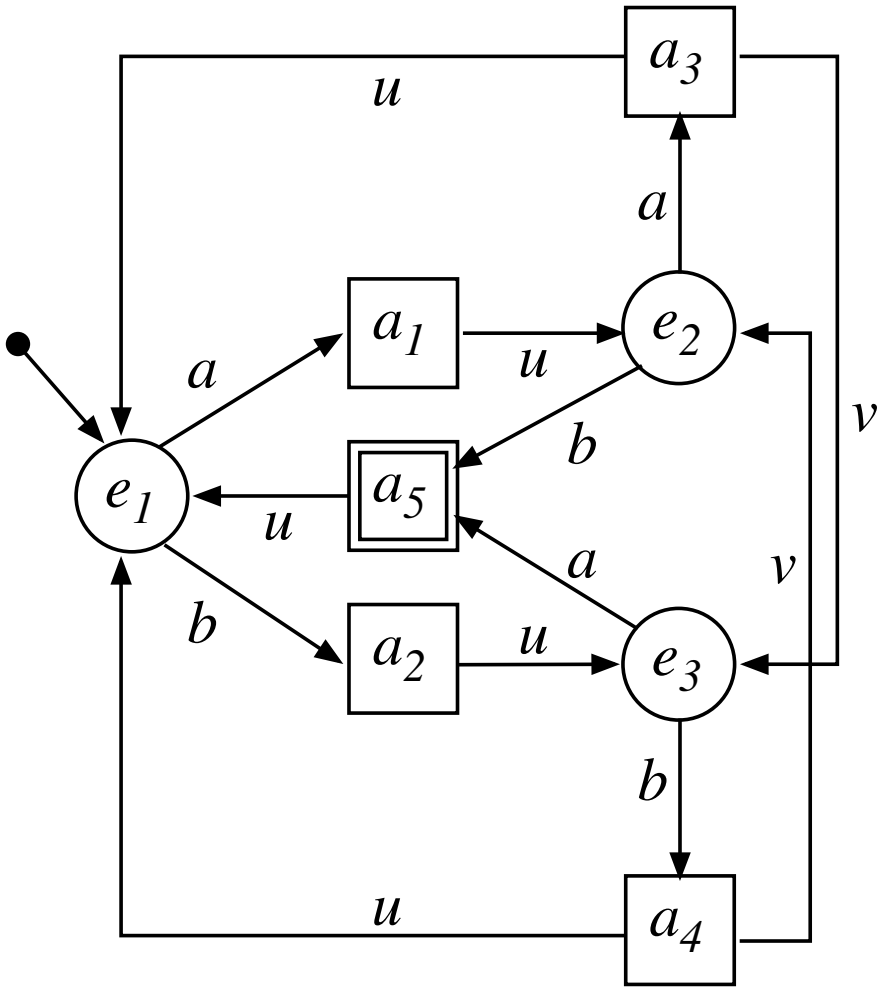

No delay:

$$e_1, e_2 \mapsto a$$
$$e_3 \mapsto b$$

1 step delay: Strategy?

$$a_1, a_4, \mapsto a$$
$$a_2, a_3 \mapsto b$$

2 steps delay: Strategy?

The Simple Safety Game

...but with Delay

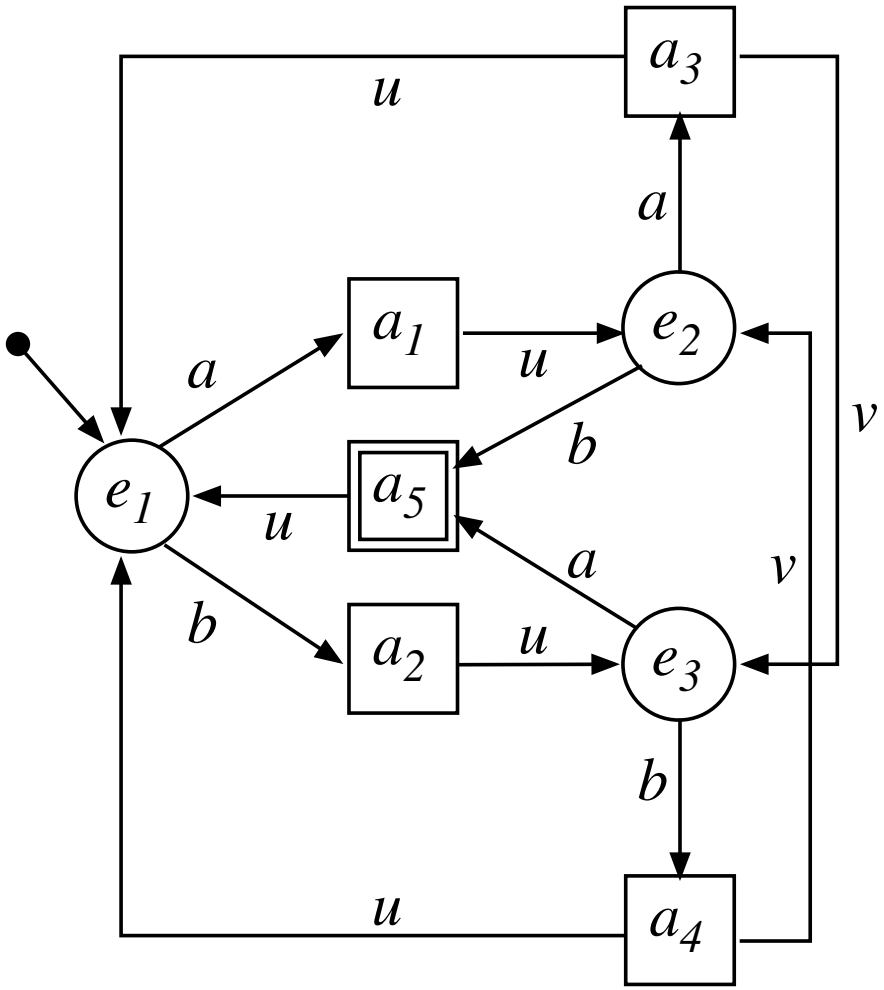

No delay:

$$e_1, e_2 \mapsto a$$
$$e_3 \mapsto b$$

1 step delay: Strategy?

$$a_1, a_4, \mapsto a$$
$$a_2, a_3 \mapsto b$$

2 steps delay: Strategy?

$$e_1 \mapsto \begin{cases} a & \text{if 2 steps back an "}a\text{" was issued} \\ b & \text{if 2 steps back a "}b\text{" was issued} \end{cases}$$

$$e_2 \mapsto b$$
$$e_3 \mapsto a$$

Need memory!

Towards Incremental Synthesis of Delay-Tolerant Strategies

Observation: A winning strategy for delay $k' > k$ can always be utilized for a safe win under delay k.

Consequence: That a position is winning for delay k is a necessary condition for it being winning under delay $k' > k$.

Towards Incremental Synthesis of Delay-Tolerant Strategies

Observation: A winning strategy for delay $k' > k$ can always be utilized for a safe win under delay k.

Consequence: That a position is winning for delay k is a necessary condition for it being winning under delay $k' > k$.

Idea: Incrementally filter out loss states & incrementally synthesize winning strategy for the remaining:

1. Synthesize maximally permissive winning strategy for underlying delay-free safety game.
2. Remove all states which are not winning.
3. For the remaining states, lift strategy from delay k to $k + 1$.
4. Repeat from 2 until either delay-resilience suffices (success) or initial state turns lossy (fail).

Towards Incremental Synthesis of Delay-Tolerant Strategies

Observation: A winning strategy for delay $k' > k$ can always be utilized for a safe win under delay k.

Consequence: That a position is winning for delay k is a necessary condition for it being winning under delay $k' > k$.

Idea: Incrementally filter out loss states & incrementally synthesize winning strategy for the remaining:

1. Synthesize maximally permissive winning strategy for underlying delay-free safety game.
2. Remove all states which are not winning.
3. For the remaining states, lift strategy from delay k to $k + 1$.
4. Repeat from 2 until either delay-resilience suffices (success) or initial state turns lossy (fail).

...reduces state-space to be analyzed to $\approx 0.1\%$–1%.

Solving Delay Differential Equations (DDE)

A formal model of delayed feedback control

DDE — The History

Historical motivation (predating digital control):

> *"Despite [...] very satisfactory state of affairs as far as [ordinary] differential equations are concerned, we are nevertheless forced to turn to the study of more complex equations. Detailed studies of the real world impel us, albeit reluctantly, to take account of the fact that the rate of change of physical systems depends not only on their present state, but also on their past history."*

[Richard Bellman and Kenneth L. Cooke, 1963]

DDE — The History

Historical motivation (predating digital control):

> *"Despite [...] very satisfactory state of affairs as far as [ordinary] differential equations are concerned, we are nevertheless forced to turn to the study of more complex equations. Detailed studies of the real world impel us, albeit reluctantly, to take account of the fact that the rate of change of physical systems depends not only on their present state, but also on their past history."*

[Richard Bellman and Kenneth L. Cooke, 1963]

Mathematical form:

$$\frac{\mathrm{d}}{\mathrm{d}t}\mathbf{x}(t) = f(\mathbf{x}(t), \mathbf{x}(t-\delta_1), \ldots, \mathbf{x}(t-\delta_n)), \text{ with } \delta_n > \ldots > \delta_1 > 0,$$

DDE — The History

Historical motivation (predating digital control):

> *"Despite [...] very satisfactory state of affairs as far as [ordinary] differential equations are concerned, we are nevertheless forced to turn to the study of more complex equations. Detailed studies of the real world impel us, albeit reluctantly, to take account of the fact that the rate of change of physical systems depends not only on their present state, but also on their past history."*

[Richard Bellman and Kenneth L. Cooke, 1963]

Mathematical form:

$$\frac{\mathrm{d}}{\mathrm{d}t}\mathbf{x}(t) = f(\mathbf{x}(t), \mathbf{x}(t-\delta_1), \ldots, \mathbf{x}(t-\delta_n)), \text{ with } \delta_n > \ldots > \delta_1 > 0,$$

Simplest instance (which we will mostly concentrate on in the remainder):

$$\frac{\mathrm{d}}{\mathrm{d}t}\mathbf{x}(t) = f(\mathbf{x}(t-\delta))$$

DDE — Why They are Hard(er)

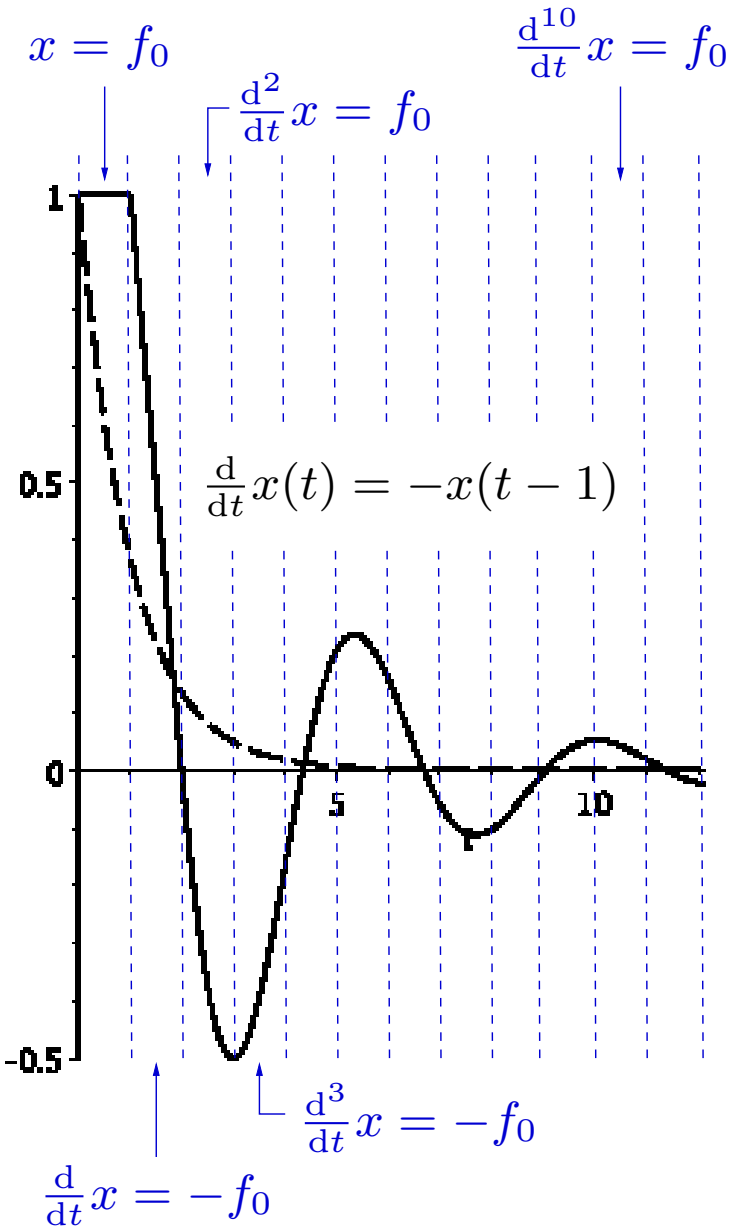

DDE constitute a model of system dynamics beyond "state snapshots":

- They feature "functional state" instead of state in the $\mathbb{R}^n$.
- Thus providing rather infallible, infinite-dimensional memory of the past.

N.B.: More complex DDE apply different transformations to the initial segment f_0, which nevertheless persists indefinitely.

DDE — Why They are Hard(er)

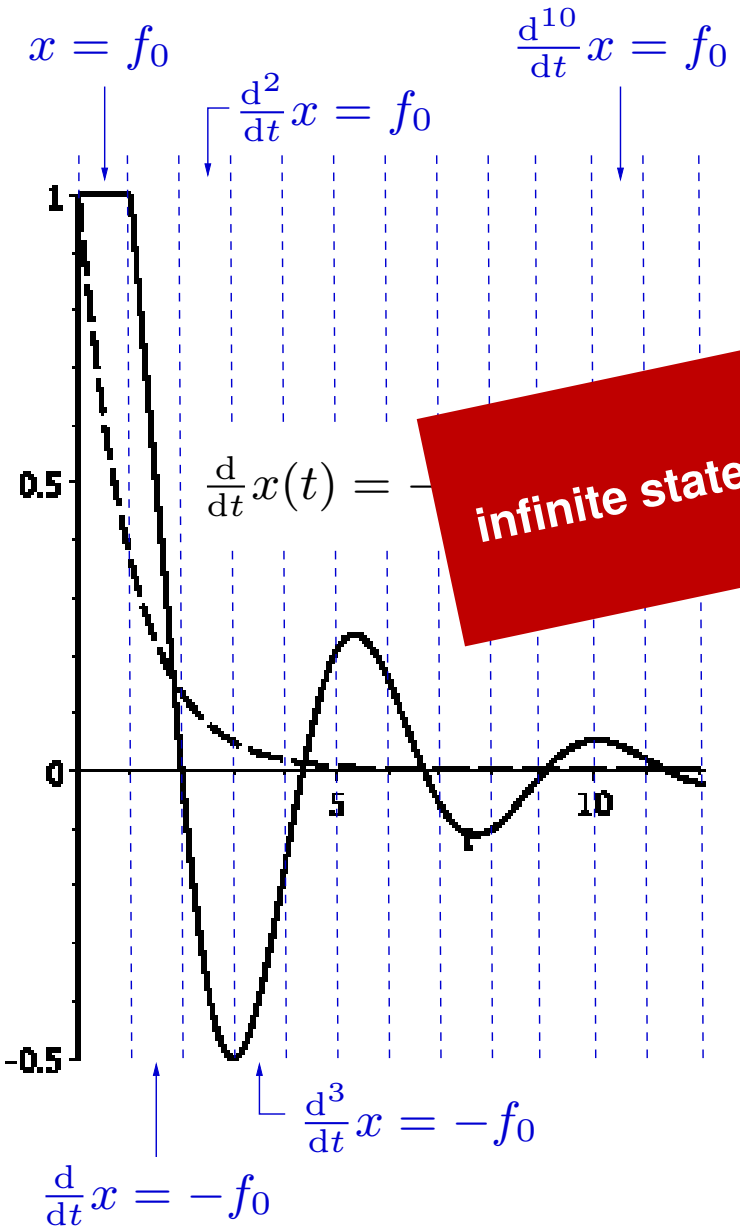

Try only if infinite state no longer is scary enough to you!

a model of system dy-
namics beyond "state snapshots":

- They feature "functional state" instead of state in the $\mathbb{R}^n$.
- Thus providing rather infallible, infinite-dimensional memory of the past.

N.B.: More complex DDE apply different transformations to the initial segment f_0, which nevertheless persists indefinitely.

Unbounded Analysis for DDE $\frac{\mathrm{d}}{\mathrm{d}t}x(t) = f(x(t-\delta))$

Main Ingredients

1. Generate the Taylor series for the segment $x\mid_{[n\delta,(n+1)\delta]}$ by integrating $f(x)\mid_{[(n-1)\delta,n\delta]}$.
   - ☹ Degree of Taylor series grows indefinitely (and rapidly so i.g.).
   - ☹ Computationally intractable.
   - ☹ Lacking means for analysing behaviour over unbounded horizon.

Unbounded Analysis for DDE $\frac{\mathrm{d}}{\mathrm{d}t}x(t) = f(x(t-\delta))$

Main Ingredients

1. Generate the Taylor series for the segment $x\mid_{[n\delta,(n+1)\delta]}$ by integrating $f(x)\mid_{[(n-1)\delta,n\delta]}$.
   - ☹ Degree of Taylor series grows indefinitely (and rapidly so i.g.).
   - ☹ Computationally intractable.
   - ☹ Lacking means for analysing behaviour over unbounded horizon.
2. Overapproximate segments by *interval* Taylor series of fixed degree.
   - ☺ Tractable (if degree low enough).
   - ☺ Thus permits bounded model checking.
   - ☹ Still no immediate means for analysis of unbounded horizon.

Unbounded Analysis for DDE $\frac{\mathrm{d}}{\mathrm{d}t}x(t) = f(x(t-\delta))$

Main Ingredients

1. Generate the Taylor series for the segment $x\,|_{[n\delta,(n+1)\delta]}$ by integrating $f(x)\,|_{[(n-1)\delta,n\delta]}$.
   - ☹ Degree of Taylor series grows indefinitely (and rapidly so i.g.).
   - ☹ Computationally intractable.
   - ☹ Lacking means for analysing behaviour over unbounded horizon.
2. Overapproximate segments by *interval* Taylor series of fixed degree.
   - ☺ Tractable (if degree low enough).
   - ☺ Thus permits bounded model checking.
   - ☹ Still no immediate means for analysis of unbounded horizon.
3. Extract the *time-invariant* polynomial operator computing coefficients of the next ITS from current ones; analyse its properties.
   - ☺ Unbounded safety and stability analysis become feasible.

Summing Up

Summary

Problem: We face

- increasingly wide-spread use of networked distributed sensing and ctrl.,
- substantial feedback delay thus affecting hybrid control schemes,
- delays impact controllability and control performance in both the discrete and the continuous parts.

2

3

4

Summary

Problem: We face

- increasingly wide-spread use of networked distributed sensing and ctrl.,
- substantial feedback delay thus affecting hybrid control schemes,
- delays impact controllability and control performance in both the discrete and the continuous parts.

Status: Developped algorithms

- for efficient control synthesis for discrete safety games under constant or upper-bounded discrete-time delay,
- for veryfing continuous differential dynamics represented as a DDE with a single or multiple small delays,
- for precise monitoring of MITL properties under unknown (up to bounds) delay and jitter.

2

3

4

Summary

Problem: We face

- increasingly wide-spread use of networked distributed sensing and ctrl.,
- substantial feedback delay thus affecting hybrid control schemes,
- delays impact controllability and control performance in both the discrete and the continuous parts.

Status: Developped algorithms

- for efficient control synthesis for discrete safety games under constant or upper-bounded discrete-time delay,[2]
- for veryfing continuous differential dynamics represented as a DDE with a single or multiple small delays,[3]
- for precise monitoring of MITL properties under unknown (up to bounds) delay and jitter.[4]

---

[2] M. Chen, MF, Y. Li, P.N. Mosaad, N. Zhan (2018): *What's to Come is Still Unsure - Synthesizing Controllers Resilient to Delayed Interaction*. ATVA 2018: 56–74

[3] P.N. Mosaad, MF, B. Xue (2017): *Model Checking Delay Differential Equations Against Metric Interval Temporal Logic*. Sci. Ann. Comput. Sci. 27(1): 77-109

[4] MF, T.M. Grosen, K.G. Larsen, M. Zimmermann (2025): *Efficient Runtime Verification of Real-Time Systems under Parametric Communication Delays*, FAC

HURRAY FOR DELAY!

Brussels Dichterscollectief
Le Collectif de Poètes Bruxellois
Brussels Poetry Collective

2011	**27**.03

© Brussels Poetry Collective

HURRAY FOR DELAY!

Brussels Dichterscollectief
Le Collectif de Poètes Bruxellois
Brussels Poetry Collective

2011	**27**.03

© Brussels Poetry Collective

Delays can be inspirational,
especially for people from Benelux!