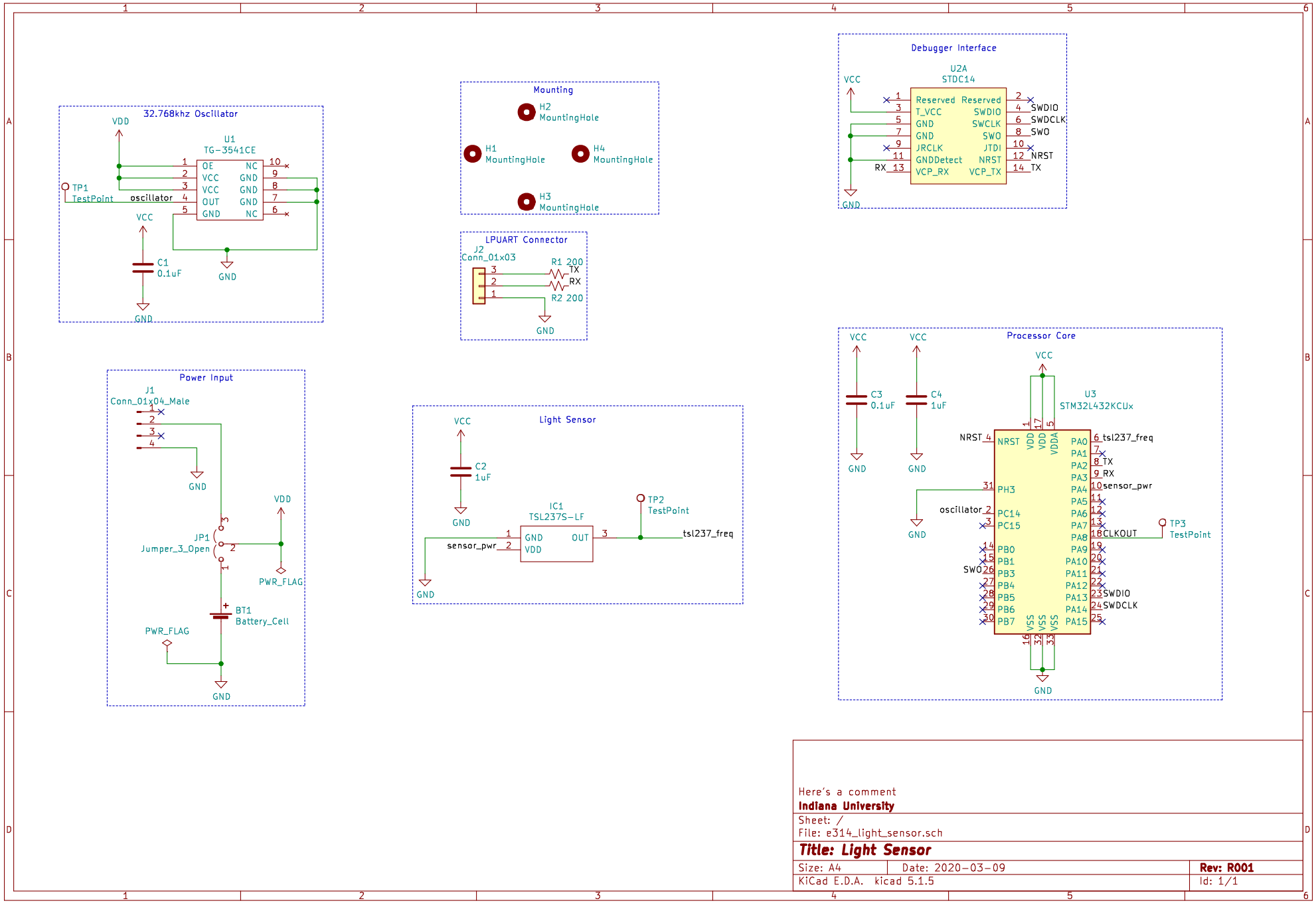

Here's a comment

Indiana University

Sheet: /

File: e314_light_sensor.sch

Title: Light Sensor

Size: A4	Date: 2020-03-09	**Rev: R001**
KiCad E.D.A. kicad 5.1.5		Id: 1/1