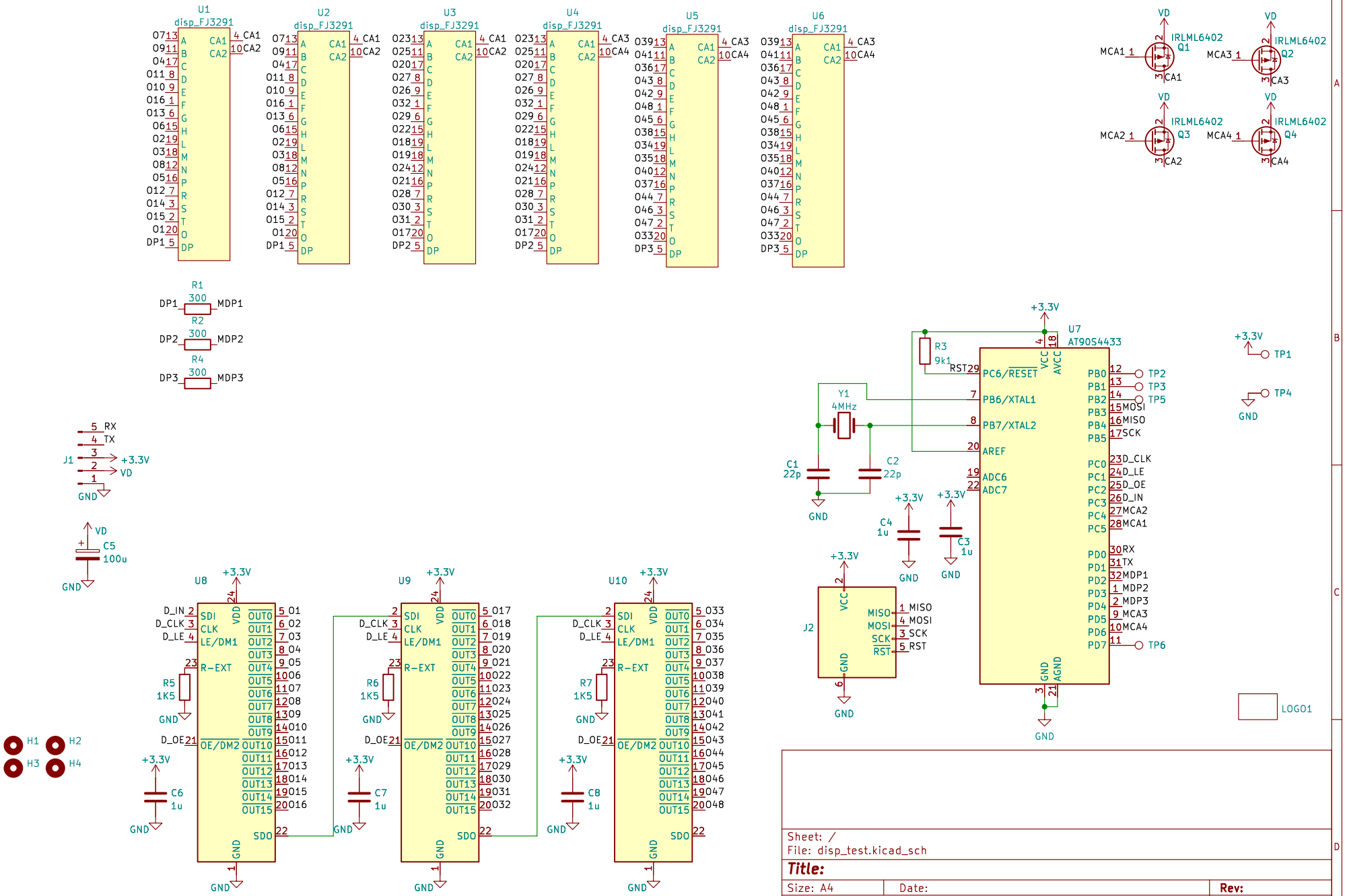

Sheet: /
File: disp_test.kicad_sch

Title:

Size: A4	Date:	Rev:
KiCad E.D.A. kicad 7.0.1-3b83917a11~172~ubuntu20.04.1		Id: 1/1