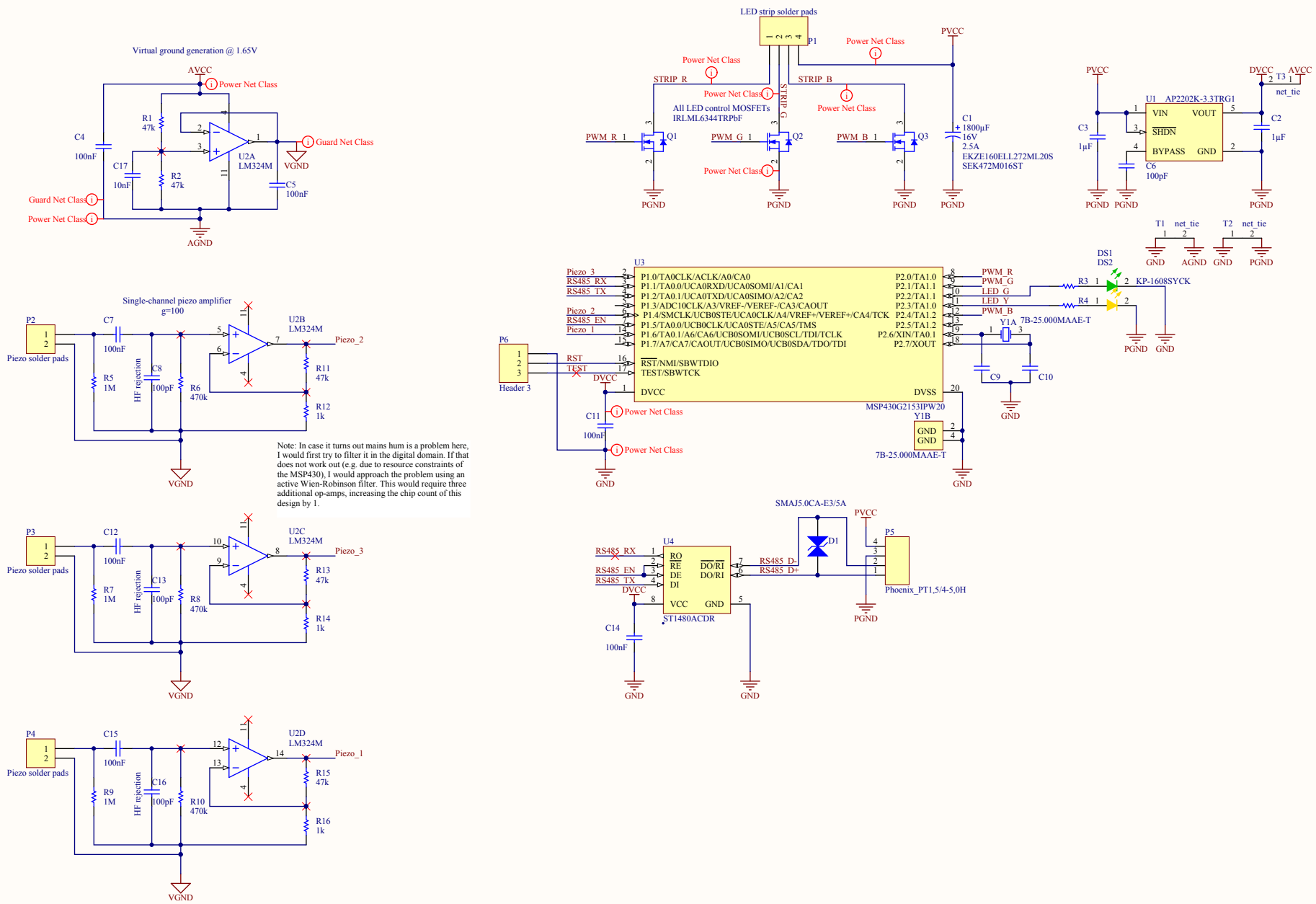

Title		
Size A3	Number	Revision
Date: 12/9/2014		Sheet of
File: C:\Users\..\main.SchDoc		Drawn By:

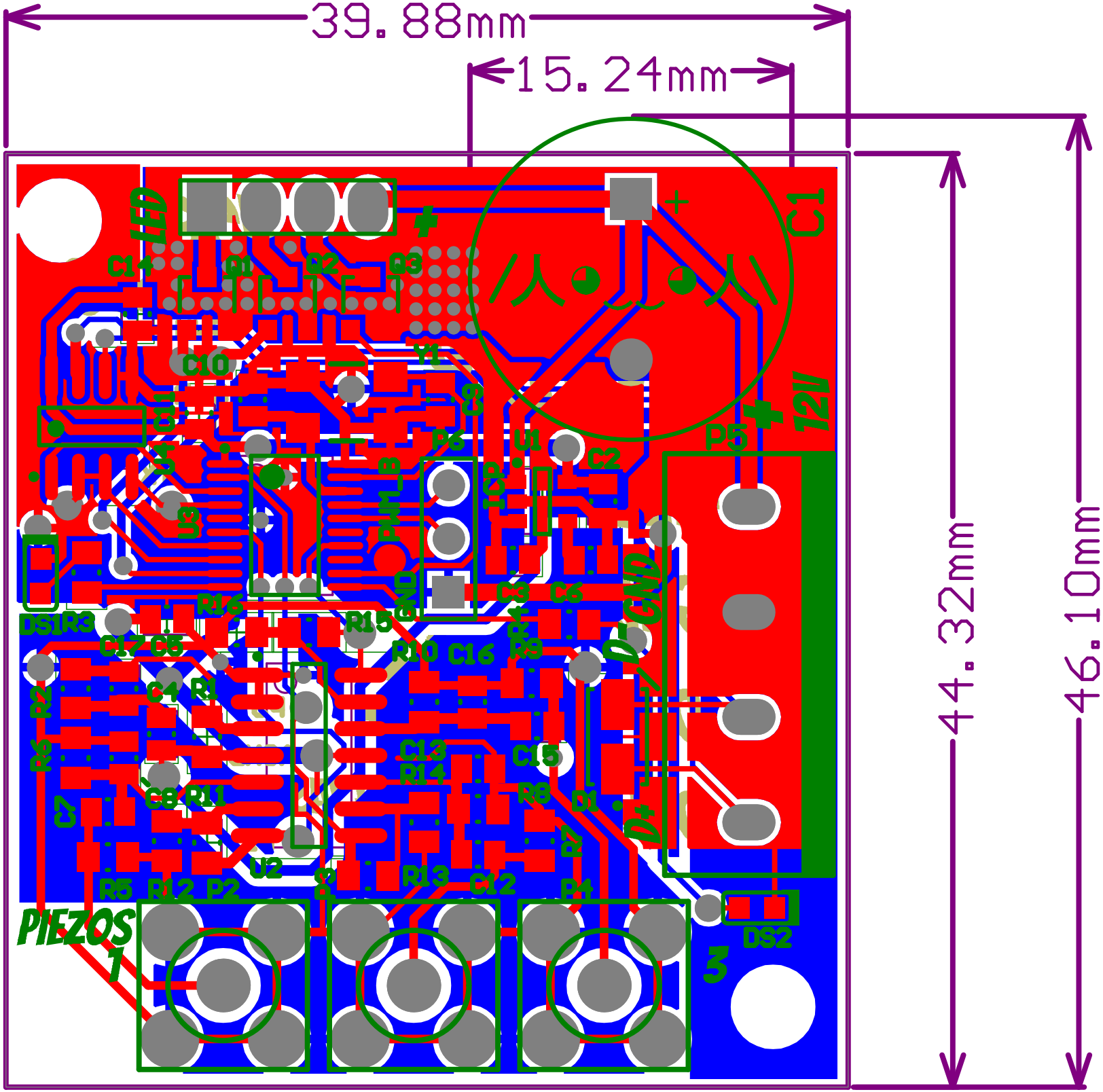
39.88mm
15.24mm
44.32mm
46.10mm
PIEZOS
12V
GND
C1
P5
P6
P4
P2
DS1
DS2
U1
U2
Q1
Q2
Q3
Y1
R15
R16
R10
R14
R13
R12
R11
R9
R6
R5
C16
C15
C13
C12
C10
C8
C6
C5
C4
C3
C2
C17
D1
D2
D3
D4
D5
D6
D7