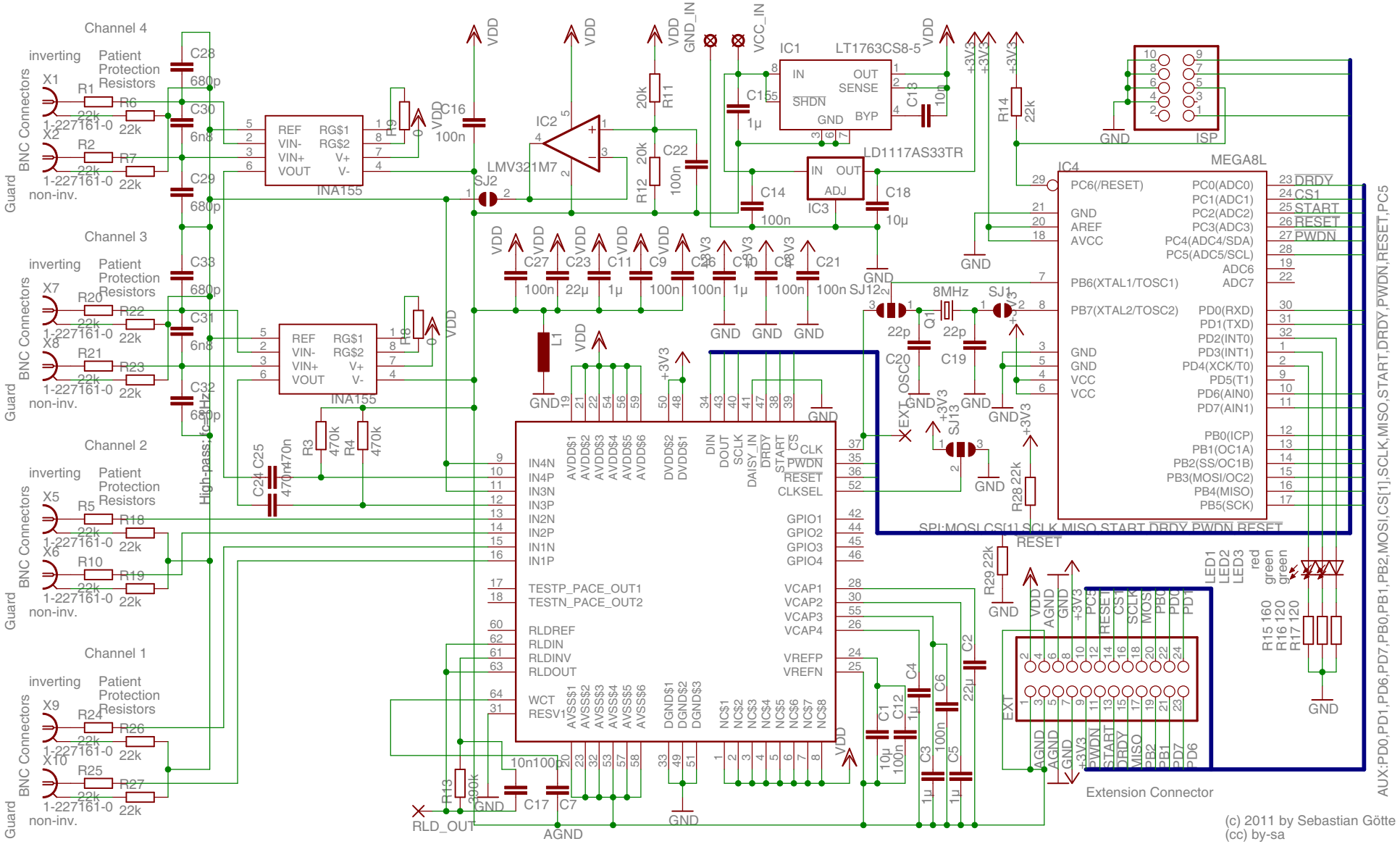
Channel 4
Channel 3
Channel 2
Channel 1
inverting
non-inv.
Patient Protection Resistors
BNC Connectors
Guard
1-227161-0
INA155
LMV321M7
IC1 LT1763CS8-5
LD1117AS33TR
IC4 MEGA8L
ISP
Extension Connector
SPI:MOSI,CS[1],SCLK,MISO,START,DRDY,PWDN,RESET
AUX:PD0,PD1,PD6,PD7,PB0,PB1,PB2,MOSI,CS[1],SCLK,MISO,START,DRDY,PWDN,RESET,PC5
High-pass: fc=3Hz
RLD_OUT
AGND
VDD
GND
VCC_IN
GND_IN
(c) 2011 by Sebastian Götte
(cc) by-sa