Research directions in secure USB devices

Sebastian Götte <secureusb@jaseg.net> @Mori lab, Waseda University

November 19 2018

1 Problem definition

A computer's USB interface is hard to secure. Though overall security is quite good today, the USB interface has not received enough attention. In particular HIDs are a problem, as they are naturally very highly privileged. Off-the-shelf USB HID attack tools exist. In particular from a security point of view extremely bad ideas such as WebUSB[18] are set to increase this already large attack surface even further.

2 State of the art

Several ways to secure the USB interface have been proposed that can be broadly categorized as follows.

- USB firewalls are software or hardware that protects the host from requests deemed invalid similar to a network firewall[15, 1, 5, 14, 8].
- USB device authentication uses some sort of user feedback or public key infrastructure to authenticate the device when it connects[2, 3, 17, 4].
- USB bus encryption encrypts the raw USB payloads to ward off eavesdroppers[9, 19].
- For wireless protocols, every conceivable pairing model has been tried. However, not many have been applied to USB[7, 16, 6, 12].
- Compartmentalized systems such as QubesOS separate vulnerable components with large attack surface such as the USB device drivers into VMs to not inhibit exploitation but mitigate its consequences.

Overall, QubesOS is the only significant practical advance towards securing this interface. Other approaches have not been successful so far. A likely reason for this is large market inertia and necessary backwards-compatibility.

QubesOS approaches the problem by running a separate VM with the USB host controllers mapped through via IOMMU. This VM runs a linux kernel with a small set of white-listed USB device drivers (HID and mass storage device) and a USB-over-IP backend. A set of Qubes services pass through any HID input arriving inside this VM into dom0, and coordinate exporting USB mass storage devices as Xen block devices. Any other USB devices can be

[1] Requires separate USB host controller for HIDs

	Attacks			Eavesdropping		Backwards compatible
	HID	**Host exploit**	**Device exploit**	**Bus-level**	**Physical layer**	
Firewalls	○	△	×	△	×	○
Device authentication	○	×	×	△	×	×
Bus encryption	△	×	×	○	○	×
Plain QubesOS setup[1]	△	△	△	△	×	○
Our work	○	○	○	○	○	○

Table 1: Comparison of approaches to USB security

passed-through to other VMs through USB-over-IP-over-QubesRPC, a Xen vChan-based inter-VM communication system.

QubesOS is still lacking in that it's compartmentalization becomes essentially useless when it is used with a USB HID keyboard that does not have its own dedicated PCIe USB host controller, as any normal desktop and most recent laptop computers. The issue here is that USB HID is neither authenticated nor encrypted, and the untrusted USB VM sits in the middle of this data stream, which thus allows it trivial privilege escalation.

3 Project goal

The goal of SecureHID is to enable the first reasonably secure system using both HID and arbitrary untrusted devices on the same USB host controller, based on QubesOS. SecureHID consists of a USB HID encryption box to be put between keyboard and computer and a piece of software run inside QubesOS. After initial pairing with the host software, the encryption box will encrypt and sign any USB HID input arriving from the keyboard and forward the encrypted data to the host. The host software running outside the untrusted USB VM will receive the encrypted and signed data from the untrusted USB VM, verify and decrypt it, and inject the received HID input events into Qubes's input event handling system.

3.1 Audio and other sensitive USB devices

This system is sufficient to secure any USB setup, especially unmodified desktop PCs or laptops where a USB host controller is shared between both HIDs and other devices. Attack surface is reduced such that a *full compromise* of the system becomes unlikely, since plain HID is no longer supported. The remaining attack surface consists only of a *compromise of the USB VM*. This attack surface is small enough that other sensitive devices such as USB audio devices can safely be connected. A compromise of the USB driver VM no longer gives full system access, but at best allows listening in on the microphone. Since a compromised USB VM does not have network access, such an attack will be mostly harmless in most scenarios. Additionally, the most likely attacking devices would be custom hardware or a smartphone. Custom hardware can easily be outfitted with a microphone, essentially turning it into a bug irrespective of USB functionality, and smartphones already have microphones by definition.

A practical mitigation to this issue would be to simply connect microphones either to a PCIe-based sound card as in most laptops, or to simply unplug the microphone when not used.

3.2 USB physical-level and bus-level attacks

Since sensitive HIDs are isolated from other USB devices effectively on a separate bus, bus-level attacks such as Neugschwandtner, Beitler, and Kurmus [9] are entirely prevented. Even much scarier physical attacks on USB such as Su et al. [13] are prevented given an adequate hardware implementation, which fortunately is no too complicated.

3.3 Diagram of a conventional setup

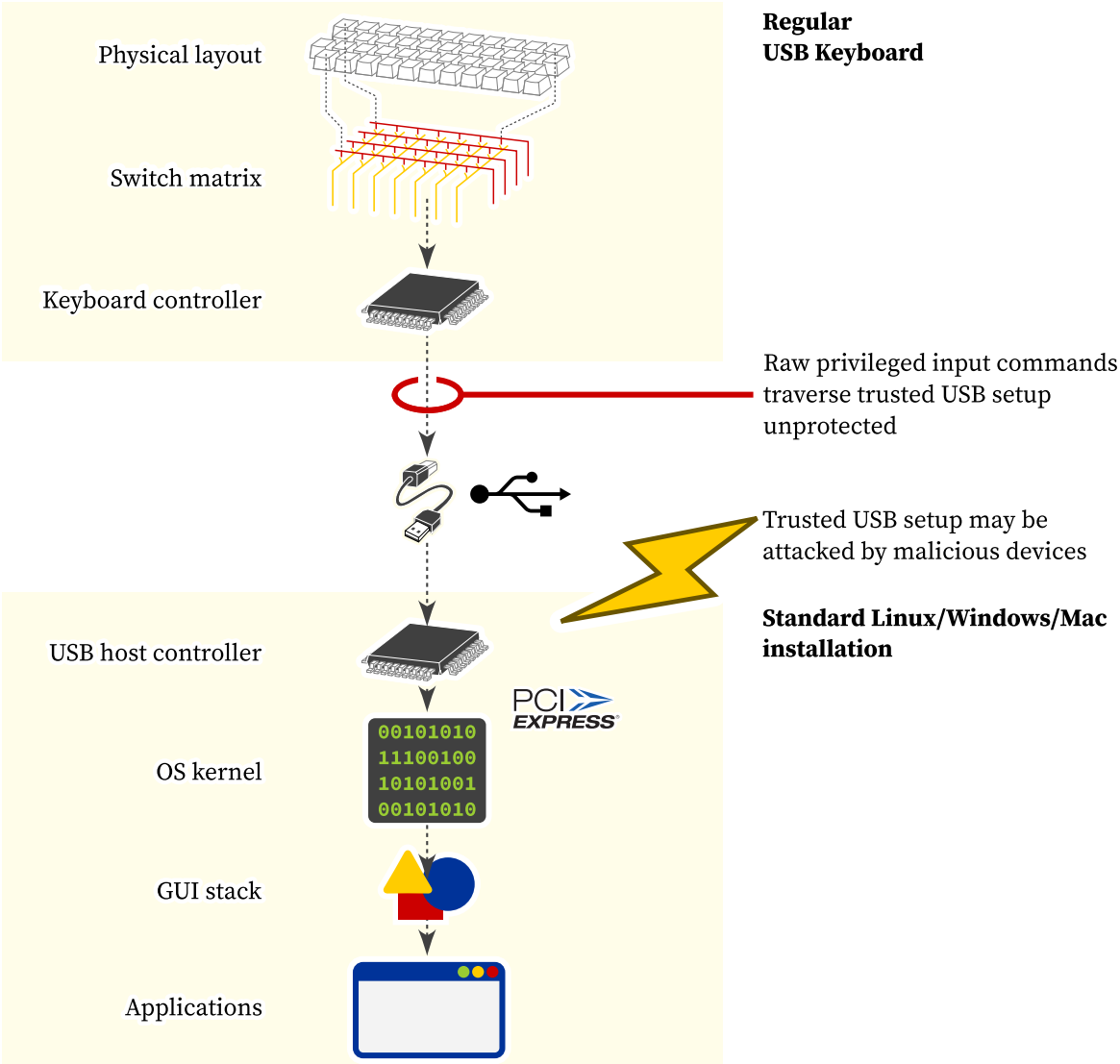

Figure 1: Diagram of a conventional unprotected system

3.4 Diagram of a SecureHID-protected system

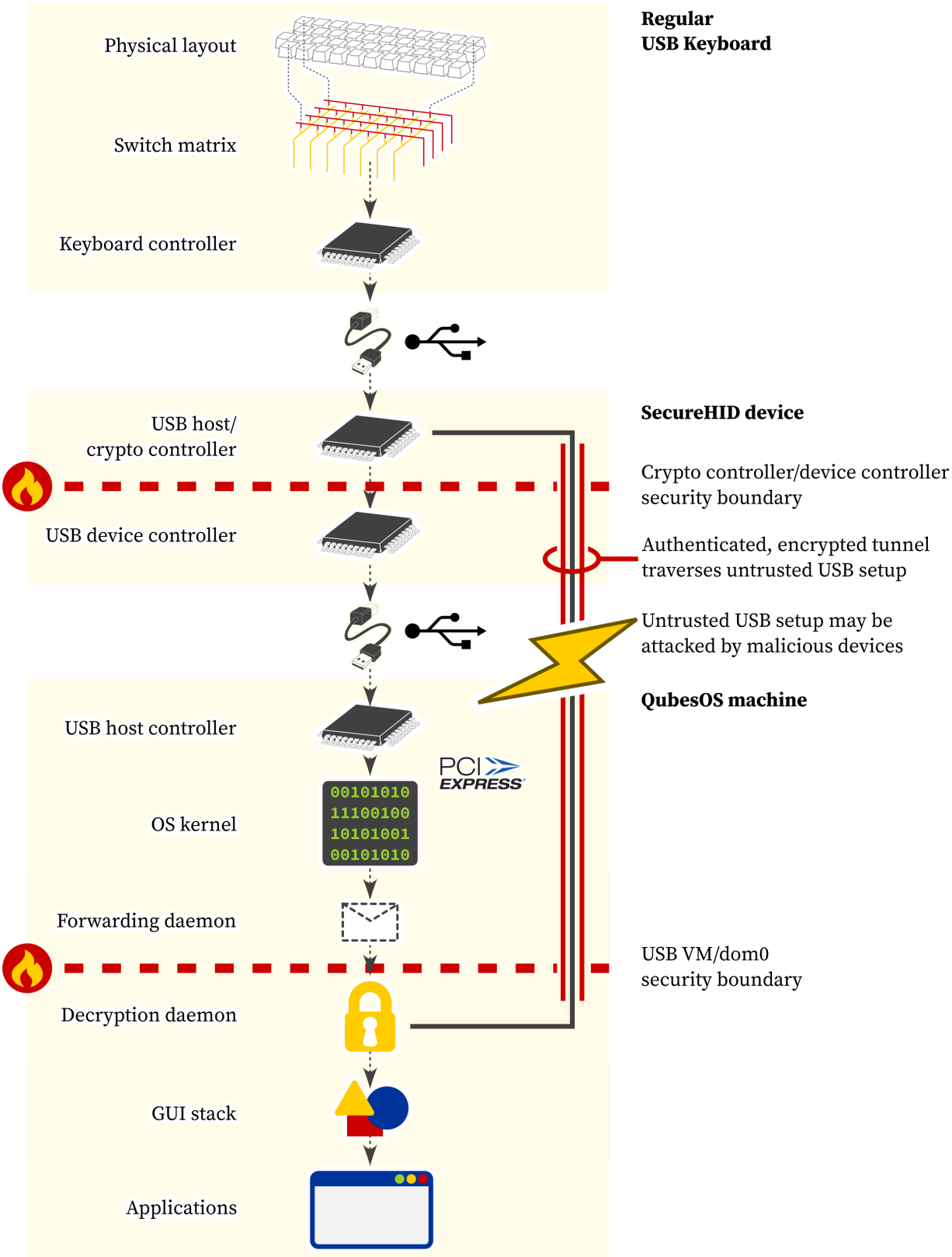

Figure 2: Diagram of a SecureHID-protected system

3.5 Key points

- A practical example of a complete, secure USB system using Qubes
- A novel interactive user-friendly side channel-based cryptographic handshaking scheme
- An example of a secure USB-based protocol

4 Project state

A working prototype has been completed.

4.1 Completed

- Rough protocol design
- Protocol implementation based on Perrin [10] using noise-c (microcontroller) and noiseprotocol (python/host)
- SRAM-based key storage with SRAM wear levelling
- host/device signature checking
- host/device key generation
- proper circuit design because I was bored last weekend (see appendix B)

4.2 Open issues

- Both noise-c and noiseprotocol have poor code and API quality. Since most noise functionality is not needed, just implement the protocol in bare C/python based on cryptographic primitives and scrap higher-level protocol implementations (though they've been useful so far during prototyping).
- Implement HID mouse host support
- Test USB hub support
- Replace the serial link with a custom USB link using an STM32F103 instead of the CH340G USB/serial converter
- Properly integrate prototype host client with qubes infrastructure
- Implement photodiode/monitor-based pairing side-channel

5 Possible directions

- Elaborate handshake security properties
  - Possibly investigate other applications of this type of interactive handshake
  - Possibly contrast to carmera/other backchannel systems
  - IMHO the pairing scheme is the most interesting part of this project from a scientific point of view
- Elaborate overall security properties of QubesOS-based system
- Elaborate possible DisplayPort/HDMI-based display encryption → Bunnie's NeTV2 w/ HDMI/eDP converter
- Elaborate possible encrypted remote input (SSH) setups
  - This might turn out to be really interesting
  - For this to be usable the host needs to tell the device at least which keyslot to use which could turn out to be complex to implement securely
  - Considering complexity, this might turn into its own research project
- Showcase secure hardware interface design, contrast with wireguard protocol design
  - Formally derive handshake security properties
  - Formally derive host/device protocol security properties using noise spec
  - Formally verify and thouroughly unit-test the host/device protocol implementation on all layers
  - IMHO this is the most interesting part of this project from an engineering point of view
- Create custom hardware prototype
- Benchmark cryptography routines (will likely turn out to be "wayyy fast" for HID, fast enough for full-speed USB. High-speed cannot be done with the current architecture as we can't get data out the chip at high-speed data rates. Ravi et al. [11] raise the issue of running crypto on embedded systems, but in this case it turns out with somewhat modern hardware and cryptography there is no problem at all.

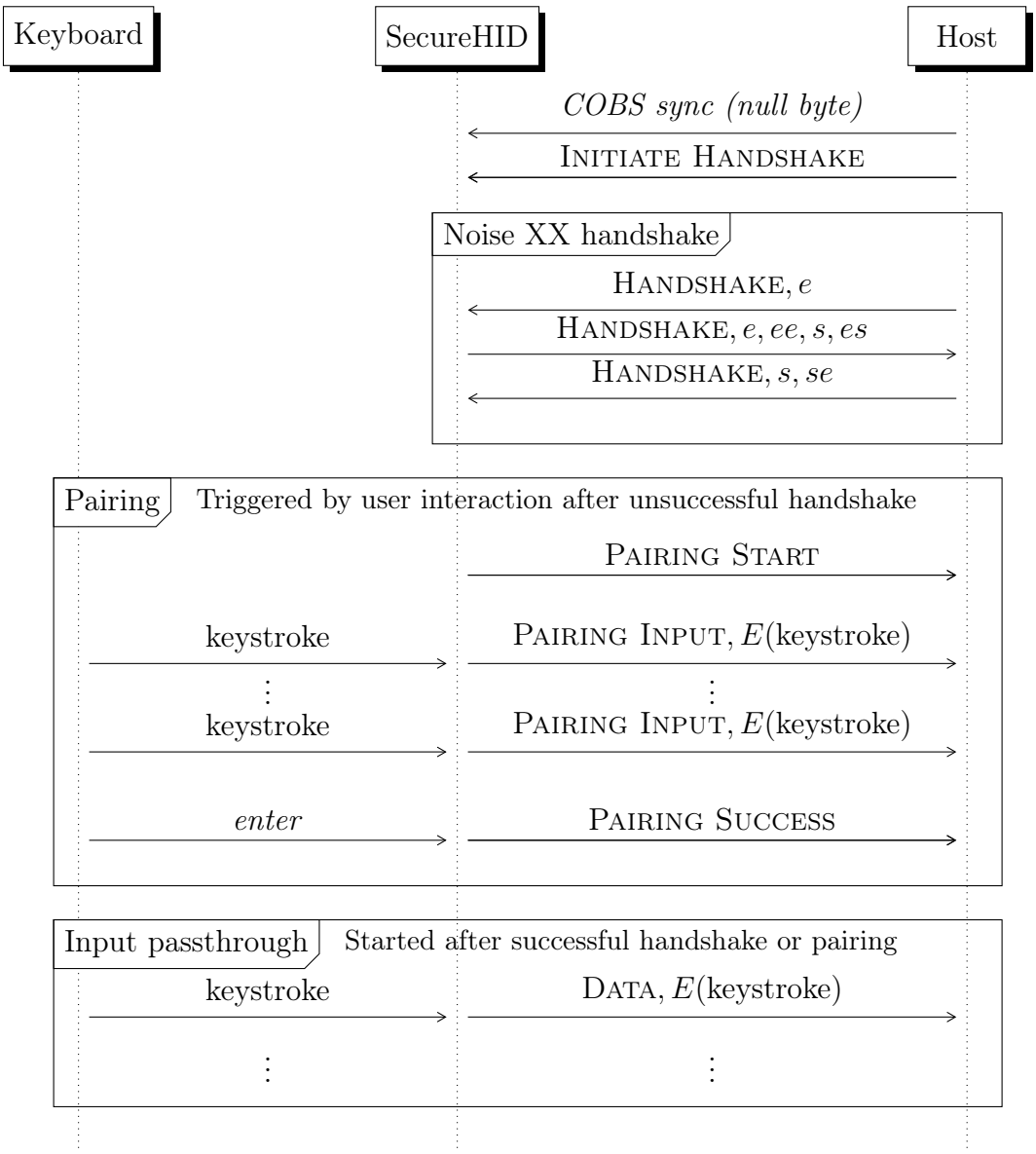

Figure 3: A successful prototype protocol pairing

A High-level protocol design

A.1 Protocol description

The basic protocol consists of two stages: PAIRING and DATA. When the device powers up, it enters PAIRING state. When the host enumerates a new device, it enters PAIRING state. If any fatal communication errors occur, both host and device re-enter PAIRING state. To make the implementation robust against host software crashing, devices being unplugged etc. without opening it up to attacks, the host can request the device to re-enter PAIRING state a limited number of times after powerup.

PAIRING state consists of a number of substates as set by Perrin [10]. The device runs noise's XX scheme, i.e. both host and device each contribute both one ephemeral key e and one static key s to the handshake, and the public halves of the static keys are transmitted during handshake encrypted by the emphemeral keys.

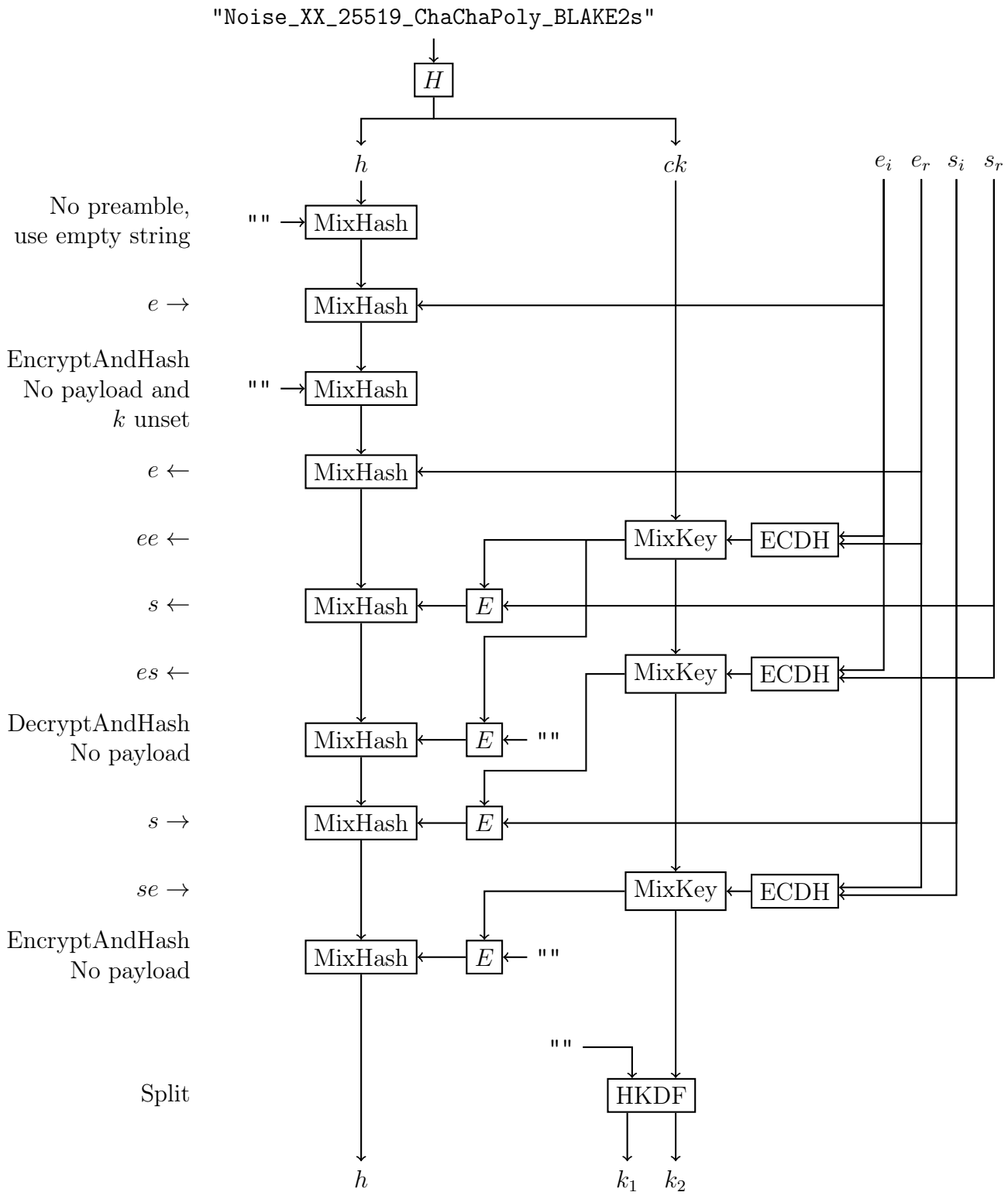

Figure 4: Cryptographic flowchart of Noise XX handshake

The cryptographic primitives instantiated in the prototype are X25519 for the ECDH primitive, BLAKE2s as a hash and ChaCha20-Poly1305 as AEAD for the data phase. ECDH instead of traditional DH was chosen for its small key size and fast computation. Since no variant of RSA is used, key generation is fast. An ad-hoc prototype device-side random number generator

has been implemented based on BLAKE2s and the STM32's internal hardware RNG.

A successful protocol run always starts like this:

1. **Handshake.** DEVICE is connected to HOST
2. HOST initiates pairing by sending INITIATE HANDSHAKE to device
3. DEVICE and HOST follow noise state machine for XX handshake
4. After the handshake completes, both DEVICE and HOST have received each other's static public key rs and established a shared secret connection key. At this point, the possibility of an MITM attacker having actively intercepted the handshake remains.
5. **Channel binding.** Both DEVICE and HOST calculate the *handshake hash* as per noise spec[10]. This hash uniquely identifies this session and depends on both local and remote ephemeral and static keys le, re, ls, rs. Both parties encode a 64-bit part of this hash into a sequence of english words by dictionary lookup. This sequence of words is called the *fingerprint* of the connection.
6. HOST prompts the user to enter the *fingerprint* into a keyboard connected to DEVICE.
7. As the user enters the *fingerprint*, DEVICE relays any input over the yet-unauthenticated encrypted noise channel to HOST. HOST displays the received user input in plain text in a regular input field in the pairing GUI. This display is only for user convenience and not relevant to the cryptographic handshake. A consequence of this is that a MITM could observe the *fingerprint*[2].
8. When the user has completed entering the fingerprint, the device checks the calculated fingerprint against the entered data. If both match, the host is signalled SUCCESS and DATA phase is entered. If they do not match, the host is signalled FAILURE[3] and PAIRING state is re-entered unless the maximum number of tries since powerup has been exceeded. Failure is indicated to the user by DEVICE through a very annoying beep accompanied by angrily flashing LEDs.
9. **Data phase.** HOST asks the user for confirmation of pairing *in case the device did not sound an alarm* by pressing a button on the GUI. When the user does this, the host enters DATA state and starts input passthrough.

Roughly speaking, this protocol is secure given that the only way to MITM a (EC)DH key exchange is to perform two (EC)DH key exchanges with both parties, then relay messages. Since both parties have different static keys, the resulting two (EC)DH sessions will have different handshake hashes under the noise framework. The channel binding step reliably detects this condition through an out-of-band transmission of the HOST handshake hash to DEVICE.

The only specialty here is that this OOB transmission is relayed back from DEVICE to HOST allowing the MITM to intercept it. This is only done for user convenience absent a MITM and the result is discarded by HOST. Since the handshake hash does as a hash does not leak

[2]A MITM could also modify the fingerprint information sent from DEVICE to HOST. This would be very obvious to the user, since the fingerprint appearing on the HOST screen would differ from what she types.

[3]Note that this means a MITM could intercept the FAILURE message and forge a SUCCESS message. This means both are just for user convenience *absent* an attacker. If an attacker is present, she will be caught in the next pairing step.

any sensitive information about the keys used during the handshake, it being exposed does not impact protocol security.

A.2 Protocol verifictation

According to Perrin [10] and proven by **kobeissi01** Noise's XX pattern provides strong forward-secrecy, sender and receiver authentication and key compromise impersonation resistance. Strong forward secrecy means an attacker can only decrypt messages by compromising the receivers private key and performing an active impersonation.

Strong forward secrecy rules out both physical and protocol-level eavesdropping attacks by malicious USB devices and implies that an attacker can never decrypt past protocol sessions. An implication of the static key checks done on both sides of the connection is that an attacker would need to compromise both host and device in order to remain undetected for e.g. keylogging. Compromising only one party the worst that can be done is impersonating the SecureHID device to perform a classical HID attack. In this case, the attacker cannot read user input. The user would notice this by SecureHID indicating a not connected status and no input being accepted.

To verify that these security properties extend to the overall SecureHID protocol it suffices to show that the SecureHID implementation adheres to Noise XX, i.e. the handshake is correctly performed, both sides' static keys are verified and all data is encapsulated in Noise messages after the handshake has ended.

B PCB design renderings

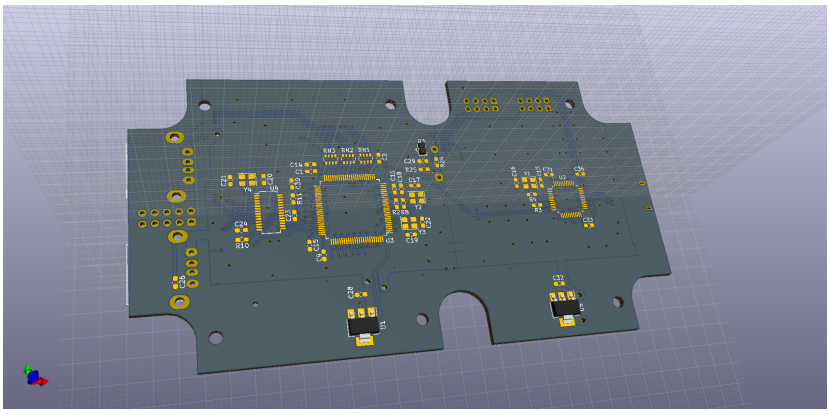

(a) PCB front

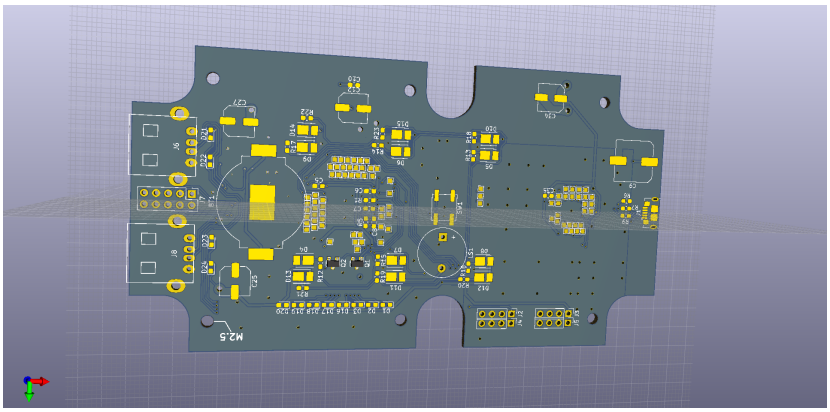

(b) PCB back

Figure 5: PCB design 3D renderings

Figure 6: Off-the-shelf enclosure the PCB is made to fit

References

[1] Sebastian Angel et al. "Defending against Malicious Peripherals with Cinch". In: *Proceedings of the 25th USENIX Security Symposium* (Aug. 2016), pp. 397–414.

[2] Bob Dunstan, Abdul Ismail, and Stephanie Wallick, eds. *Universal Serial Bus Type-C Authentication Specification*. 2017.

[3] Federico Griscioli, Maurizio Pizzonia, and Marco Sacchetti. "USBCheckIn: Preventing BadUSB Attacks by Forcing Human-Device Interaction". In: (2017).

[4] Debiao He et al. "Enhanced Three-factor Security Protocol for Consumer USB Mass Storage Devices". In: *IEEE Transactions on Consumer Electronics* 60.1 (Feb. 2014), pp. 30–37.

[5] Myung Kang and Hossein Saiedian. "USBWall: A novel security mechanism to protect against maliciously reprogrammed USB devices". In: *Information Security Journal "A Global Perspective"* 26.4 (2017), pp. 166–185.

[6] Alfred Kobsa et al. "Serial Hook-ups: A Comparative Usability Study of Secure Device Pairing Methods". In: *Symposium on Usable Privacy and Security (SOUPS)* (July 2009).

[7] Arun Kumar et al. "Caveat Emptor: A Comparative Study of Secure Device Pairing Methods". In: (2009).

[8] Edwin Lupito Loe et al. "SandUSB: An Installation-Free Sandbox For USB Peripherals". In: (2016).

[9] Matthias Neugschwandtner, Anton Beitler, and Anil Kurmus. "A Transparent Defense Against USB Eavesdropping Attacks". In: *EUROSEC'16* (Apr. 2016).

[10] Trevor Perrin. *The Noise Protocol Framework*. Tech. rep. Rev. 34. July 2018.

[11] Srivaths Ravi et al. "Security in Embedded Systems: Design Challenges". In: *ACM Transactions on Embedded Computing Systems* 3.3 (Aug. 2004), pp. 461–491.

[12] Nitesh Saxena et al. "Secure Device Pairing based on a Visual Channel". In: *Proceedings of the 2006 IEEE Symposium on Security and Privacy (S&P'06)* (2006).

[13] Yang Su et al. "USB Snooping Made Easy: Crosstalk Leakage Attacks on USB Hubs". In: *Proceedings of the 26th USENIX Security Symposium* (Aug. 2017), pp. 1145–1161.

[14] Dave (Jing) Tian, Adam Bates, and Kevin Butler. "Defending Against Malicious USB Firmware with GoodUSB". In: *ACSAC* (Dec. 2015).

[15] Dave Tian et al. *Making USB Great Again with USBFILTER*. Austin, Texas, Aug. 2016.

[16] Ersin Uzun, Kristiina Karvonen, and N. Asokan. *Usability Analysis of Secure Pairing Methods*. Tech. rep. Helsinki, Finland: Nokia Research Center, 2007.

[17] Zhaohui Wang, Ryan Johnson, and Angelos Stavrou. "Attestation & Authentication for USB Communications". In: (2012).

[18] *WebUSB API*. 2018. URL: `https://wicg.github.io/webusb/`.

[19] David Weinstein, Xeno Kovah, and Scott Dyer. "SeRPEnT: Secure Remote Peripheral Encryption Tunnel". In: (2012).