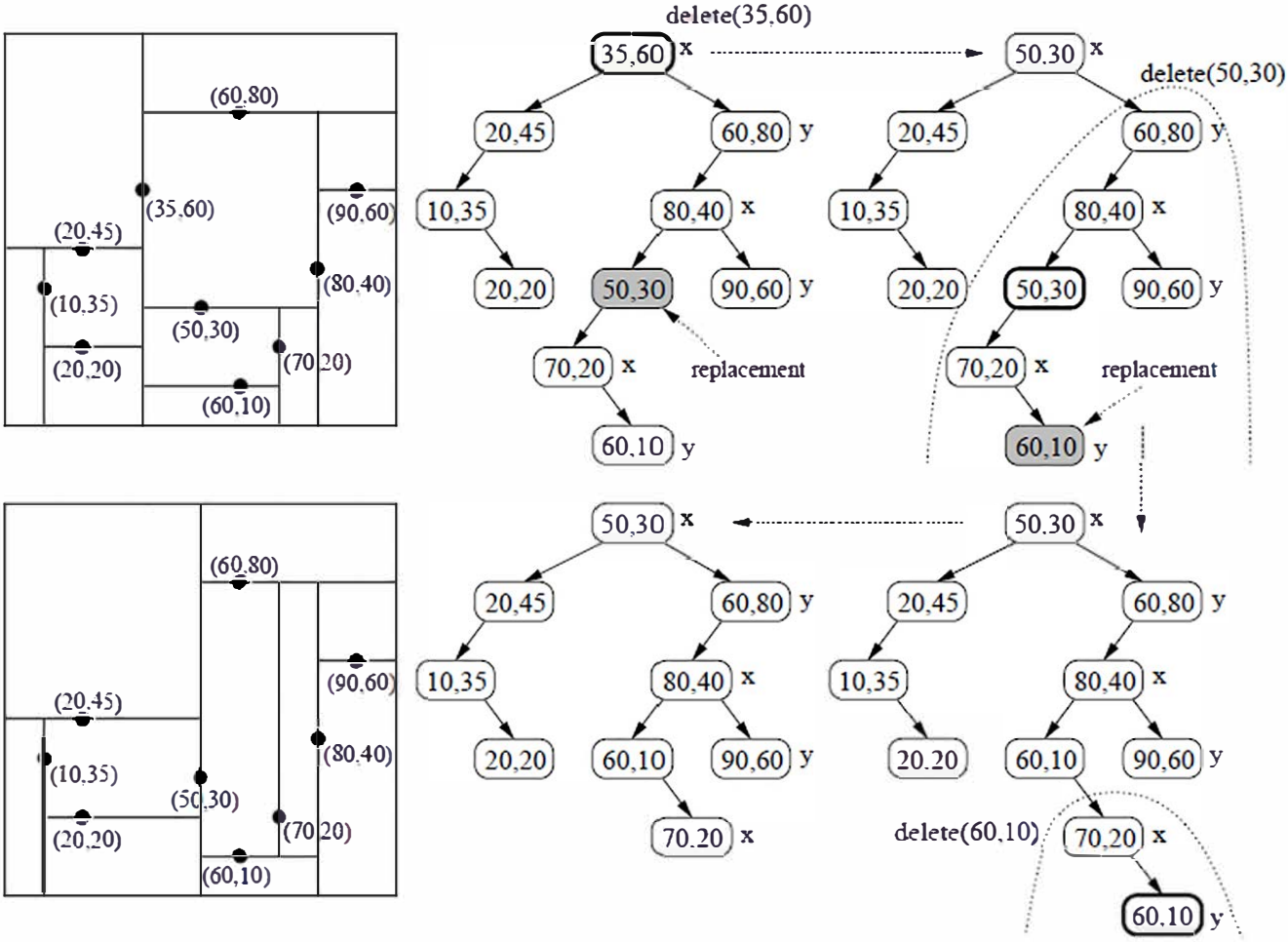

Example: Deletion from a kd-tree.