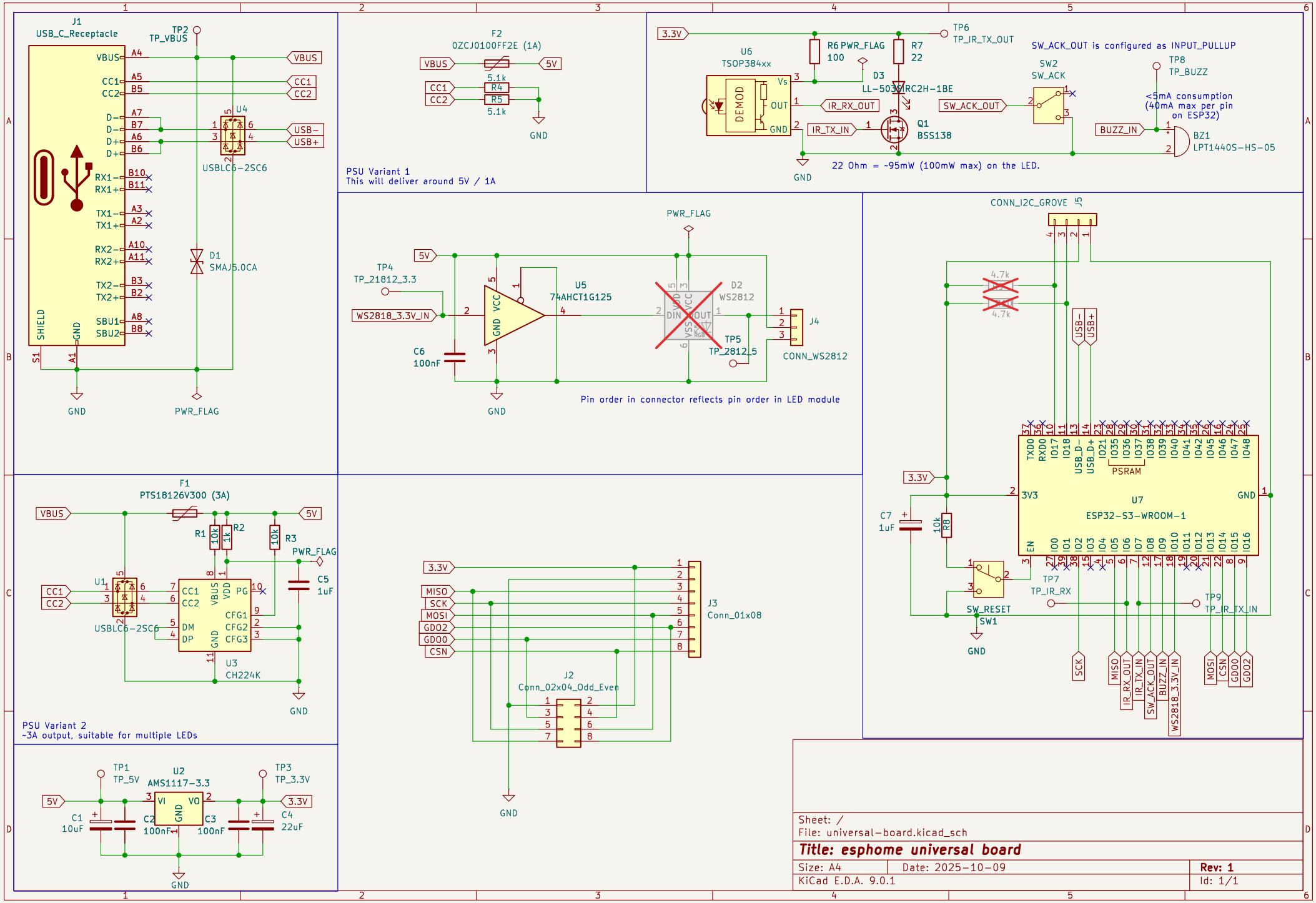
J1
USB_C_Receptacle
TP2
TP_VBUS
VBUS
CC1
CC2
D−
D+
RX1−
RX1+
TX1−
TX1+
RX2−
RX2+
TX2−
TX2+
SBU1
SBU2
SHIELD
GND
S1
A1
U4
USBLC6−2SC6
USB−
USB+
D1
SMAJ5.0CA
GND
PWR_FLAG
F2
0ZCJ0100FF2E (1A)
5V
5.1k
R4
R5
PSU Variant 1
This will deliver around 5V / 1A
3.3V
U6
TSOP384xx
DEMOD
Vs
OUT
R6 PWR_FLAG
100
R7
22
D3
LL-5035IRC2H-1BE
TP6
TP_IR_TX_OUT
SW_ACK_OUT is configured as INPUT_PULLUP
SW2
SW_ACK
TP8
TP_BUZZ
<5mA consumption
(40mA max per pin
on ESP32)
IR_RX_OUT
IR_TX_IN
Q1
BSS138
BUZZ_IN
BZ1
LPT1440S−HS−05
22 Ohm = ~95mW (100mW max) on the LED.
PWR_FLAG
TP4
TP_21812_3.3
WS2818_3.3V_IN
U5
74AHCT1G125
VCC
C6
100nF
D2
WS2812
DIN
DOUT
TP5
TP_2812_5
J4
CONN_WS2812
Pin order in connector reflects pin order in LED module
CONN_I2C_GROVE
J5
4.7k
USB−
USB+
F1
PTS18126V300 (3A)
R1
10k
R2
1k
R3
10k
PWR_FLAG
C5
1uF
U1
USBLC6−2SC6
CC1
CC2
VBUS
VDD
PG
DM
DP
CFG1
CFG2
CFG3
U3
CH224K
PSU Variant 2
~3A output, suitable for multiple LEDs
MISO
SCK
MOSI
GDO2
GDO0
CSN
J3
Conn_01x08
J2
Conn_02x04_Odd_Even
U7
ESP32−S3−WROOM−1
TXD0
RXD0
USB_D−
USB_D+
PSRAM
3V3
EN
GND
C7
1uF
R8
10k
SW_RESET
SW1
TP7
TP_IR_RX
TP9
TP_IR_TX_IN
IR_RX_OUT
IR_TX_IN
SW_ACK_OUT
BUZZ_IN
WS2818_3.3V_IN
TP1
TP_5V
U2
AMS1117−3.3
VI
VO
C1
10uF
C2
100nF
C3
100nF
TP3
TP_3.3V
C4
22uF
Sheet: /
File: universal−board.kicad_sch
Title: esphome universal board
Size: A4
Date: 2025−10−09
Rev: 1
KiCad E.D.A. 9.0.1
Id: 1/1