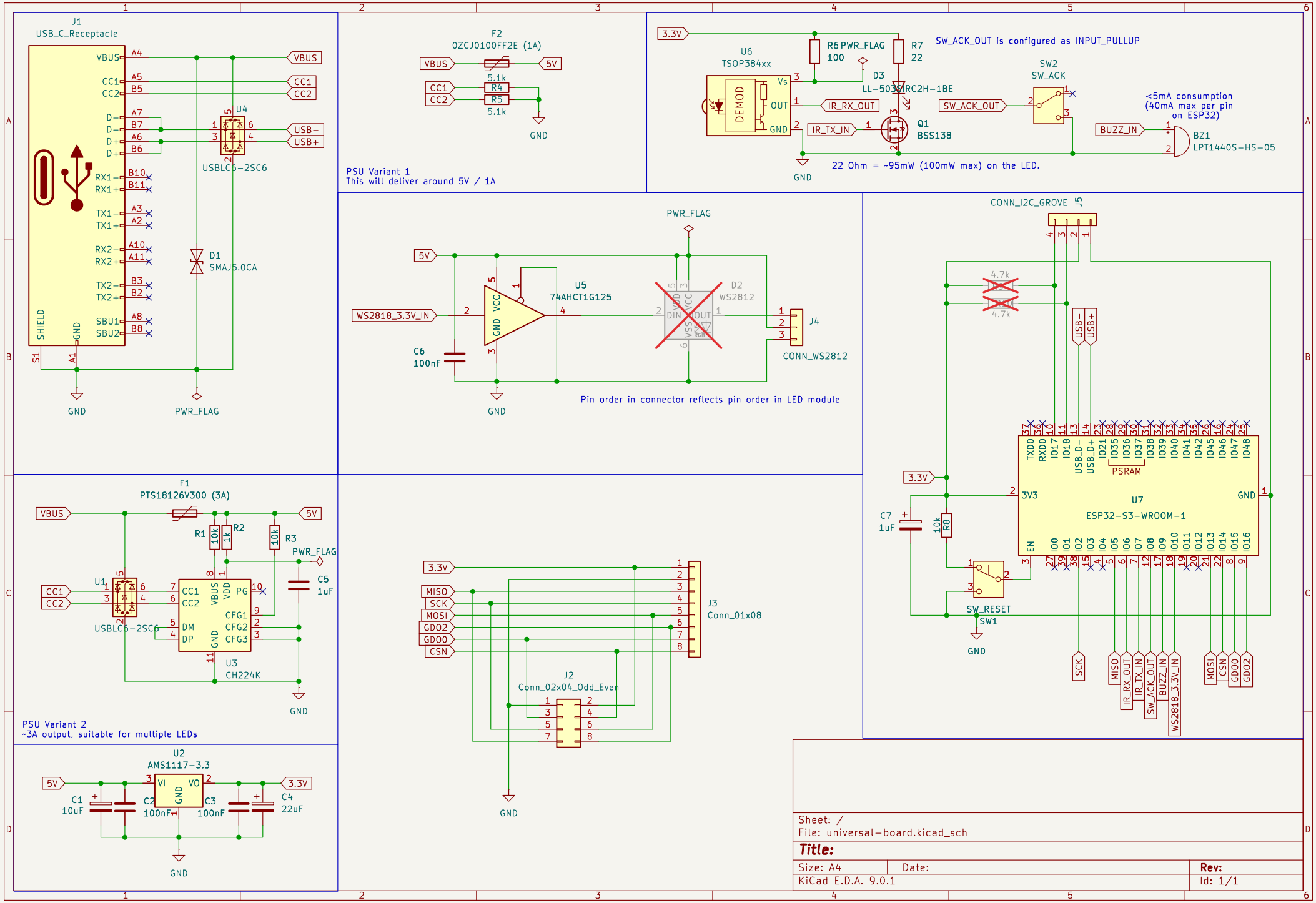
J1
USB_C_Receptacle
VBUS
CC1
CC2
D−
D+
RX1−
RX1+
TX1−
TX1+
RX2−
RX2+
TX2−
TX2+
SBU1
SBU2
SHIELD
GND
S1
A1
A4
A5
B5
A7
B7
A6
B6
B10
B11
A3
A2
A10
A11
B3
B2
A8
B8
U4
USBLC6−2SC6
USB−
USB+
D1
SMAJ5.0CA
PWR_FLAG
F2
0ZCJ0100FF2E (1A)
5V
5.1k
R4
R5
PSU Variant 1
This will deliver around 5V / 1A
3.3V
U6
TSOP384xx
DEMOD
Vs
OUT
R6 PWR_FLAG
100
R7
22
D3
LL-5036IRC2H-1BE
IR_RX_OUT
IR_TX_IN
Q1
BSS138
SW_ACK_OUT is configured as INPUT_PULLUP
SW2
SW_ACK
<5mA consumption
(40mA max per pin
on ESP32)
BUZZ_IN
BZ1
LPT1440S-HS-05
22 Ohm = ~95mW (100mW max) on the LED.
U5
74AHCT1G125
WS2818_3.3V_IN
C6
100nF
D2
WS2812
DIN
OUT
VDD
VSS
J4
CONN_WS2812
Pin order in connector reflects pin order in LED module
CONN_I2C_GROVE
J5
4.7k
USB−
USB+
U7
ESP32-S3-WROOM-1
3V3
EN
GND
TXD0
RXD0
USB_D−
USB_D+
PSRAM
C7
1uF
10k
R8
SW_RESET
SW1
SCK
MISO
IR_RX_OUT
IR_TX_IN
SW_ACK_OUT
BUZZ_IN
WS2818_3.3V_IN
MOSI
CSN
GDO0
GDO2
F1
PTS18126V300 (3A)
R1
10k
R2
1k
R3
10k
C5
1uF
U1
USBLC6−2SC6
CC1
CC2
VBUS
VDD
PG
DM
DP
CFG1
CFG2
CFG3
U3
CH224K
PSU Variant 2
~3A output, suitable for multiple LEDs
J3
Conn_01x08
J2
Conn_02x04_Odd_Even
U2
AMS1117-3.3
VI
VO
C1
10uF
C2
100nF
C3
100nF
C4
22uF
Sheet: /
File: universal-board.kicad_sch
Title:
Size: A4
Date:
Rev:
KiCad E.D.A. 9.0.1
Id: 1/1