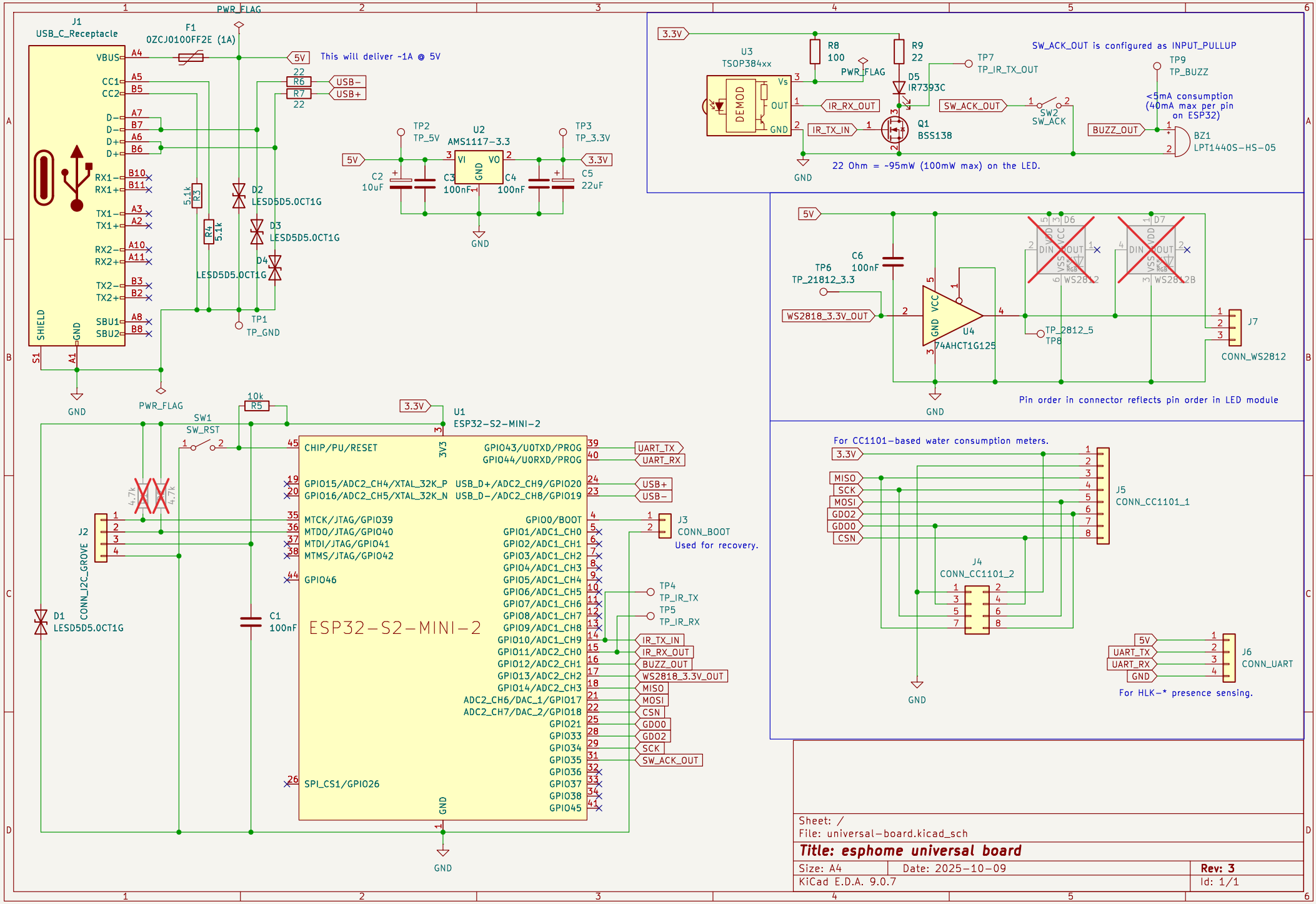

Sheet: /
File: universal−board.kicad_sch

Title: esphome universal board

Size: A4	Date: 2025−10−09	**Rev: 3**
KiCad E.D.A. 9.0.7		Id: 1/1