MagicPairing: Apple's Take on Securing Bluetooth Peripherals

Dennis Heinze
Secure Mobile Networking Lab
TU Darmstadt, Germany
dheinze@seemoo.de

Jiska Classen
Secure Mobile Networking Lab
TU Darmstadt, Germany
jclassen@seemoo.de

Felix Rohrbach
Cryptoplexity
TU Darmstadt, Germany
felix.rohrbach@cryptoplexity.de

ABSTRACT

Device pairing in large Internet of Things (IoT) deployments is a challenge for device manufacturers and users. Bluetooth offers a comparably smooth trust on first use pairing experience. Bluetooth, though, is well-known for security flaws in the pairing process.

In this paper, we analyze how *Apple* improves the security of Bluetooth pairing while still maintaining its usability and specification compliance. The proprietary protocol that resides on top of Bluetooth is called *MagicPairing*. It enables the user to pair a device once with *Apple's* ecosystem and then seamlessly use it with all their other *Apple* devices.

We analyze both the security properties provided by this protocol as well as its implementations. In general, *MagicPairing* could be adapted by other IoT vendors to improve Bluetooth security. Even though the overall protocol is well-designed, we identified multiple vulnerabilities within *Apple's* implementations using over-the-air and in-process fuzzing.

CCS CONCEPTS

• **Security and privacy** → **Systems security**; *Software security engineering*; Software reverse engineering; • **Networks** → **Application layer protocols**.

KEYWORDS

Bluetooth, Pairing, Security

ACM Reference Format:
Dennis Heinze, Jiska Classen, and Felix Rohrbach. 2020. MagicPairing: Apple's Take on Securing Bluetooth Peripherals. In *13th ACM Conference on Security and Privacy in Wireless and Mobile Networks (WiSec '20), July 8–10, 2020, Linz (Virtual Event), Austria.* ACM, New York, NY, USA, 11 pages. https://doi.org/10.1145/3395351.3399343

1 INTRODUCTION

Bluetooth device pairing has a long history of security flaws [1, 2, 6, 15, 25, 26, 29]. While most issues were fixed in the Bluetooth 5.2 specification [7], it is reasonable to assume that even this version is not bullet-proof. Adding further layers of encryption within the applications using Bluetooth is one solution many IoT developers chose [10]—but this leads to their devices being incompatible in communicating with third-party applications and drains battery. Thus, encrypting data twice is no satisfying solution to this problem.

Looking back into the history of Bluetooth security issues, it is not the encryption itself that has been exploited frequently. Most problems originated from the initial key negotiation and connection setup. In Bluetooth, trust is established on first use by generating a permanent key. This permanent key protects device authenticity, message integrity, and message confidentiality [7, p. 269]. It is established individually between each pair of devices and only changes when a user manually deletes and reestablishes a pairing. In Classic Bluetooth, the permanent key is called Link Key (LK), while it is called Long Term Key (LTK) in Bluetooth Low Energy (BLE)—however, they can be converted into each other [7, p. 280]. For the duration of each Bluetooth connection, a session key is derived from the permanent key. Thus, if a device is out of reach or switched off, this invalidates a session key.

In modern IoT deployments, Bluetooth device pairing has two major shortcomings: *(1)* It does not scale for pairing to many devices within an existing infrastructure, and *(2)* once the permanent key is leaked, all security assumptions break for past and future connections. The permanent key can either be attacked by an active Machine-in-the-Middle (MITM) during pairing [6, 15, 25] or by Remote Code Execution (RCE) vulnerabilities within the chip [9].

Apple solves both challenges by introducing a protocol called *MagicPairing*. It pairs *AirPods* once and then enables the user to instantly use them on all their *Apple* devices. Security is improved by generating fresh "permanent" keys based on the user-specific *iCloud* keys for each session. Seamless ecosystem integration and security are imperative, since *AirPods* are able to interact with the *Siri* assistant.

Despite being a proprietary extension, *MagicPairing* is specification-compliant to the Host Controller Interface (HCI), and thus, can use off-the-shelf Bluetooth chips. The general logic of *MagicPairing* could be integrated into any cloud-based IoT ecosystem, increasing relevance for the security community in general. Our contributions on research of *MagicPairing* are as follows:

- We reverse-engineer the *MagicPairing* protocol.
- We analyze the security aspects provided by this protocol and their applicability to other wireless ecosystems.
- We document the proprietary *iOS*, *macOS*, and *RTKit* Bluetooth stacks.
- We manually test *MagicPairing* for logical bugs and automatically fuzz its three implementations.
- We responsibly disclosed multiple vulnerabilities.

While the overall idea of *MagicPairing* is new and solves shortcomings of the Bluetooth specification, we found various issues in *Apple's* implementations. As *MagicPairing* is available prior to pairing and encryption, it poses a large zero-click wireless attack

Permission to make digital or hard copies of all or part of this work for personal or classroom use is granted without fee provided that copies are not made or distributed for profit or commercial advantage and that copies bear this notice and the full citation on the first page. Copyrights for components of this work owned by others than ACM must be honored. Abstracting with credit is permitted. To copy otherwise, or republish, to post on servers or to redistribute to lists, requires prior specific permission and/or a fee. Request permissions from permissions@acm.org.
WiSec '20, July 8–10, 2020, Linz (Virtual Event), Austria
© 2020 Association for Computing Machinery.
ACM ISBN 978-1-4503-8006-5/20/07…$15.00
https://doi.org/10.1145/3395351.3399343

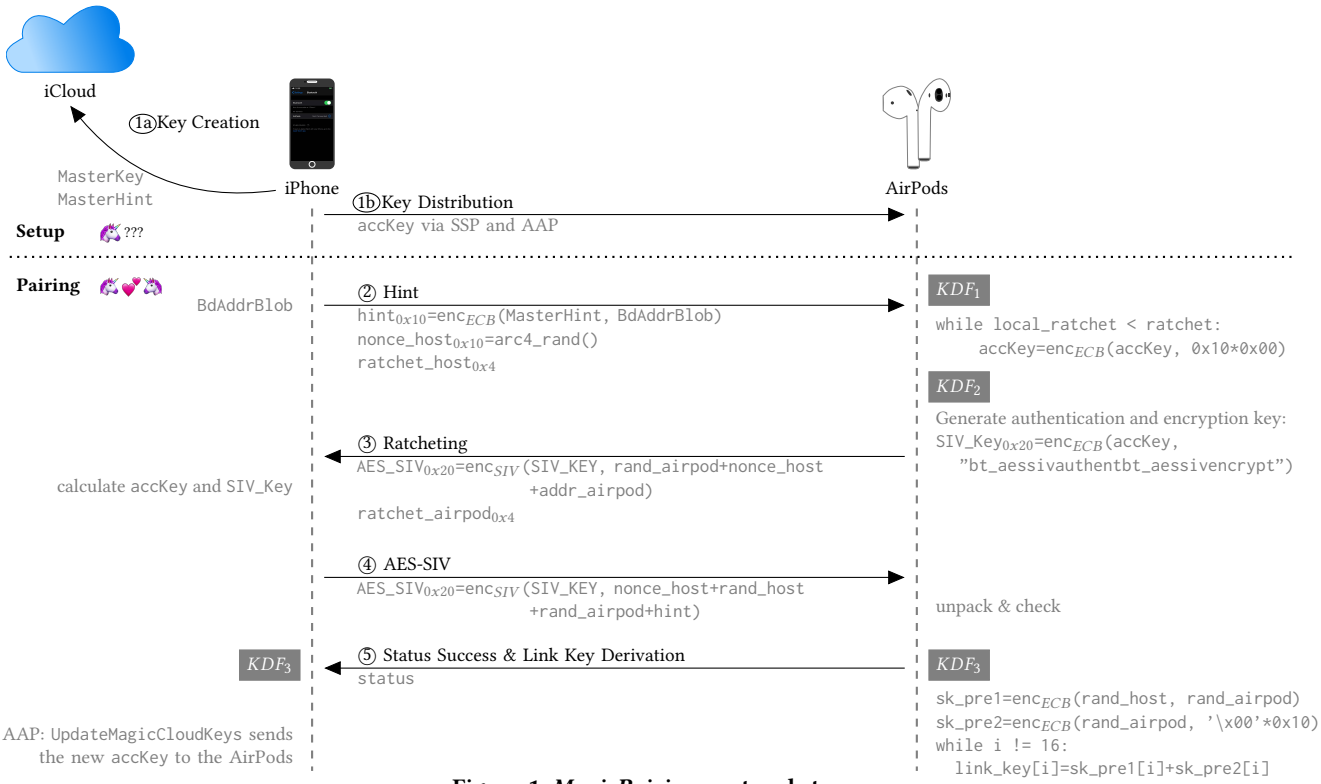

Figure 1: *MagicPairing* protocol steps.

surface. We found that all implementations have different issues, including a lockout attack and a Denial of Service (DoS) causing 100 % CPU load. We identified these issues performing both generic over-the-air testing and *iOS* in-process fuzzing.

Our fuzzing techniques can also be used to test other Bluetooth stacks and protocols. The Proof of Concepts (PoCs) for the identified vulnerabilities as well as the over-the-air fuzzing additions are available within the *InternalBlue* project on *GitHub*. The *ToothPicker* in-process fuzzer part that integrates into *InternalBlue* will follow soon, but has to be slightly delayed due to further findings [13].

This paper is structured as follows: Section 2 gives an overview of the reverse-engineered *MagicPairing* protocol. Its security properties are explained in Section 3. Implementation internals regarding *Apple's* Bluetooth stacks as well as *MagicPairing*-specific details are provided in Section 4. Then in Section 5, we explain our fuzzing setup used to identify the vulnerabilities explained in Section 6. We conclude our work in Section 7.

2 THE MAGICPAIRING PROTOCOL

MagicPairing is a proprietary protocol providing seamless pairing capabilities, for instance between a user's *AirPods* and all their *Apple* devices. This is achieved by synchronizing keys over *Apple's* cloud service *iCloud*. The ultimate goal of the *MagicPairing* protocol is to derive a Bluetooth Link Key (LK) that is used between a single device and the *AirPods*. A fresh LK is created for each connection, which significantly reduces the lifetime of this LK.

When a new or reset pair of *AirPods* is initially paired with an *Apple* device belonging to an *iCloud* account, Secure Simple Pairing (SSP) is used [7, p. 271ff]. All subsequent connections between the *AirPods* and devices connected to that *iCloud* account will use the *MagicPairing* protocol as pairing mechanism. *MagicPairing* involves multiple keys and derivation functions. It relies on Advanced Encryption Standard (AES) in Synthetic Initialization Vector (SIV) mode for authenticated encryption [11].

The protocol mainly consists of five phases. The protocol flow is visualized in Figure 1 and explained in the following. *MagicPairing* depends on a shared secret between the two participants. Therefore, the first phase establishes and exchanges a secret, followed by phases of the actual protocol. As the protocol is not publicly documented, our naming relies on debug output and strings found in the respective components, i.e., the Bluetooth daemon `bluetoothd` for *iOS* and *macOS*, as well as the *AirPod* firmware. Further implementation and Bluetooth stack details follow later in Section 4.

2.1 Phase 1: Key Creation and Distribution

MagicPairing relies on a shared secret between the *AirPods* and a user's *iCloud* devices, the *Accessory Key* (also `accKey`). This key is created by the first device pairing *AirPods* for a specific *iCloud* account. After establishing an encrypted Bluetooth connection using SSP, the *Accessory Key* needs to be transmitted to the *AirPods*. *Apple* is using the *AAP Protocol*[1] for the *Accessory Key* transfer. In

[1] *AAP* is used for communication between a device and *AirPods*. While it is only used with the abbreviation *AAP*, it might stand for *Apple AirPod Protocol*. Its services all revolve around configuring *AirPods* and obtaining information from them, such as firmware updates, getting and setting tapping actions, or exchanging key material.

addition to the *Accessory Key*, the host also creates an *Accessory Hint*, which uniquely identifies the connection between an *iCloud* account and the target device. The initiating device uses the *iCloud* account's *Master Key* and *Master Hint* to create the *Accessory Key* and the *Accessory Hint*. In case these *Master* credentials do not exist yet, the device initializes them with random bytes. Another component that is needed to create the *Accessory Key* and *Accessory Hint* is the so-called *Bluetooth Address Blob*, which is a deterministic mutation of the Bluetooth address of the targeted device, as shown in Listing 1. The *Bluetooth Address Blob* is then encrypted with the *Master Key* using AES in ECB mode to create the *Accessory Key*. The *Accessory Hint* is created by encrypting the *Bluetooth Address Blob* with the *Master Hint*, respectively.

After the initial setup, both devices share the same *Accessory Key*. All devices logged into the *iCloud* account can generate the same *Accessory Key*. In the following example, the device connects to the *AirPods*, but all steps could also happen in the opposite direction.

```
BdAddrBlob[1:5] = address[5:0]
BdAddrBlob[6:9] = address[1:4] ^ address[0:3]
```

Listing 1: Creating a *Bluetooth Address Blob*.

2.2 Phase 2: Hint

The first repeating phase in the *MagicPairing* protocol is the *Hint* phase. It ensures that both sides will agree on the same fresh session key in the end that belongs to the correct device. The device initiates the pairing by sending a *Hint* message. The *Hint* message includes three entries: the `hint`, a random nonce generated by the initiating host, and a *Ratchet*. The *Ratchet* is a counter used in later steps of the pairing process to rotate keys.

The receiving end performs a local *Accessory Key* table lookup for the connecting device. The *AirPods* use the `hint` that is included in the *Hint* message as a reference, *iOS* and *macOS* devices use the connecting device's Bluetooth address to look up the key. If no key is found, the protocol is aborted with a *Status Message* indicating that the initiating device is unknown.

2.3 Phase 3: Ratcheting

The *Ratcheting* phase is essentially a key rotation and derivation phase. The goal of *Ratcheting* is to renew and maintain short-lived session keys [21]. First, the *Accessory Key* is rotated and then a *SIV Key* is derived from the rotated key. The *Accessory Key* is rotated by encrypting a buffer of 16 null-bytes with the current *Accessory Key* using AES in Electronic Codebook (ECB) mode. After one rotation step, the current counter, or *Ratchet*, is incremented. This is done until the local *Ratchet* equals the *Hint's Ratchet*. Then, the *SIV Key* is derived from the *Accessory Key* by encrypting the static 32 B string `bt_aessivauthentbt_aessivencrypt` with the *Accessory Key* using AES in ECB mode. Next, an *AES-SIV* value is created. For this, the device creates a local random value, concatenates it with the received nonce and its own Bluetooth address, and encrypts it with the *SIV Key*. This time, AES is used in SIV mode without a nonce or any additional data. At the end of this phase, a *Ratchet AES-SIV* message is sent back to the initiating device. It contains the local *Ratchet* value, as well as the *AES-SIV* value. The initiating device executes the same key derivation steps as mentioned above using the received *Ratchet* value. This leads to both devices having the same updated *Accessory Key* and *SIV Key*. Using the derived *SIV Key*, the initiating device can now decrypt the *AES-SIV* value to unpack the random value of the responding device.

2.4 Phase 4: AES-SIV

The initiating device will now create another *AES-SIV* value. However, this one is different from the one that the responding device created before. First, the device creates a new random value. Then it concatenates its nonce value, the new random value, the previously received *AirPods* random value, and the `hint` value. This 64 B value is then encrypted with the derived *SIV Key* using AES in SIV mode and sent to the responding device. If the *AirPods* can decrypt the received data, they send a *MagicPairing Status* success message.

2.5 Phase 5: Link Key Derivation

Finally, a Bluetooth-compliant connection LK is derived. First, two *Session Pre Keys* are created and XORed. The *Session Pre Key 1* is created by encrypting the responding device's random value with the initiating device's random value as key using AES. The *Session Pre Key 2* is created by encrypting a 16 B null-byte buffer with the responding device's random value using AES.

It is important to note that even though *MagicPairing* is a custom key derivation protocol, the further usage of this key is still compliant to the Bluetooth specification and does not require any modifications to the Bluetooth chip. When establishing an encrypted connection, the chip sends an HCI command to ask the host for the stored LK [7, p. 1948]. In case of *MagicPairing*, the LK is not taken from the host's storage but freshly created, which is completely transparent to the chip. In either case, the LKs is stored on the host. However, it is only short-lived within *MagicPairing*, while it is permanent for a normal Bluetooth pairing.

3 SECURITY PROPERTIES

The security goals of the *MagicPairing* protocol seem to be to provide authentication and a fresh shared key for each connection. It uses a symmetric ratcheting algorithm and authenticated encryption to achieve these goals.

The idea of ratcheting was introduced by Borisov, Goldberg, and Brewer [8]. They introduced a continuous Diffie-Hellman key exchange providing forward and post-compromise secrecy within a session. Marlinspike and Perrin [21] extended this notion in the *Double Ratchet* algorithm to include a second, symmetric ratchet that updates the key while one party is offline. The symmetric version only provides forward secrecy, but no post-compromise secrecy.

The *MagicPairing* protocol uses the symmetric ratcheting and therefore does not provide post-compromise secrecy. However, the usage of no expensive public-key cryptography makes this protocol feasible for usage with IoT devices like the *AirPods*. Further, note that *MagicPairing* uses ratcheting in a slightly different way than the previous work: Instead of creating a new key per message, the protocol creates a new key per Bluetooth connection. What is defined in the *Double Ratchet* algorithm as message key is therefore a connection key in this protocol.

In the *Double Ratchet* algorithm, the symmetric ratchet consists of a Key Derivation Function (KDF) that, given a chain key, produces a new chain key and an independent message key. This is done for each new message, so each new message gets encrypted with a new key. As the KDF cannot be inverted, the knowledge of the chain key at some point only allows to calculate future chain and message keys, but no previous chain and message keys. Further, the knowledge of a message key does not enable an adversary to calculate any of the chain keys. *MagicPairing* uses two separate KDFs to accomplish the same goal: The first KDF,

$$\mathrm{KDF}_1(k) = \mathrm{enc}_{ECB}(k, 0^{16}),$$

is used to update the chain key. By using plain AES keyed with the old chain key to encrypt a constant (here: the bit string consisting of only zeros), it uses the Pseudo-Random Function (PRF) property of AES, which guarantees that without knowledge of the old chain key k, the new chain key is indistinguishable from a random key. The second KDF,

$$\mathrm{KDF}_2(k) = (\mathrm{enc}_{ECB}(k, c_1), \mathrm{enc}_{ECB}(k, c_2)),$$

where c_1 is the string `bt_aessivauthent` and c_2 the string `bt_aessivencrypt`, produces a connection key, which itself consists of two different key parts, an authentication and an encryption part. By the same argument as for KDF_1, the chain key cannot be calculated from the produced key and both key parts are independent.

The ratchet is initialized with the account key and the position in the ratchet is synchronized by the values `ratchet_host` and `ratchet_airpod` (see Figure 1).

For the encryption of the messages between the host and the *AirPod*, AES is used in the SIV mode of operation. SIV, an authenticated encryption mode, was introduced by Rogaway and Shrimpton [24] and standardized in the combination with AES in RFC5297 [11]. It is used without any headers in *MagicPairing*, which is secure as long as the entropy of each message is high enough. As all messages encrypted with AES-SIV contain a new random number, the entropy is sufficient.

Finally, *MagicPairing* uses a third KDF to generate the key used for the Bluetooth connection, based on two random values, one generated by the host and one generated by the *AirPod*:

$$\mathrm{KDF}_3(r_h, r_a) = \mathrm{enc}_{ECB}(r_h, r_a) \oplus \mathrm{enc}_{ECB}(r_a, 0^{16})$$

Again, this uses the PRF property of plain AES to generate a key that is indistinguishable from random as long as not both random values are known.

Knowledge of the final key implies knowledge of the SIV key, which in turn implies the knowledge of the account key, which identifies the party as being connected to the *iCloud* account. Further, for each connection a new key is used in a forward-secret manner. Therefore, the protocol meets the security goals of authentication and forward secrecy.

4 IMPLEMENTATION DETAILS

In the following, we discuss *Apple*-specific implementation details, which impact our security analysis. Section 4.1 compares the three Bluetooth stacks. As all of them differ significantly, the attack surface as well as bugs in their implementations vary. Section 4.2 lists the *MagicPairing* message formats, which are relevant for fuzzing the protocol as well as for understanding the fuzzing attacks and results. Section 4.3 explains the advertisements sent by *AirPods*, and based on these, connections are initiated. Finally, we spot many spelling mistakes, as shown in Section 4.4, which outline the *MagicPairing* code quality.

4.1 Apple's Bluetooth Stacks

Apple uses three fundamentally different Bluetooth stacks in their recent devices. Each stack is for an individual device type and supports a subset of features. Thus, the protocols they support have multiple implementations. While this circumstance helps us to reverse engineer these protocols, it increases maintenance overhead for *Apple*. From a security perspective, this results in different issues in these stacks, as shown later in Section 6.

RTKit is a separate framework for resource-constrained embedded devices. While this separation to reduce features makes sense, *iOS* and *macOS* also have individual Bluetooth stacks. As they are closed-source and there is only little public documentation, we provide an overview in the following. Figure 2 compares all stacks.

4.1.1 macOS. The most recent version of the *macOS* Bluetooth stack was investigated and documented previously to integrate *InternalBlue* [28]. The *macOS* kernel exposes a user-space `IOKit` device-interface for Bluetooth [4]. `IOKit` communicates using a Mach port with the `IOBluetoothFamily` driver, which supports

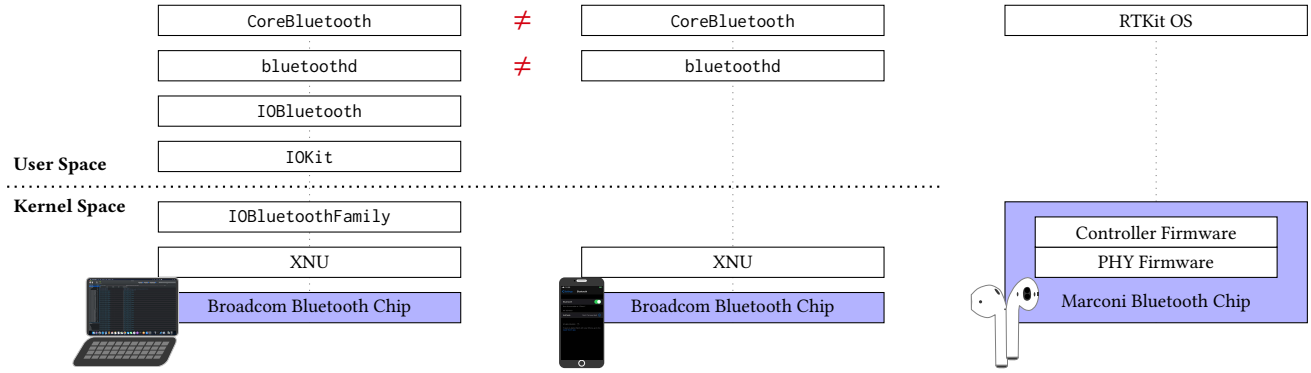

Figure 2: *Apple's* Bluetooth stacks: *macOS, iOS,* and *RTKit.*

connectivity to USB, Universal Asynchronous Receiver-Transmitter (UART), and PCIe chips. User-space applications can connect to Bluetooth devices using the `IOBluetooth` private Application Programming Interface (API), which exposes methods to access the chip via HCI and send Asynchronous Connection-Less (ACL) data. The *macOS* `bluetoothd` manages all Bluetooth logic and connects to other daemons such as `bluetoothaudiod` for music streaming. The public API to access Bluetooth on *macOS* is `CoreBluetooth`, which communicates with `bluetoothd` via Cross-Process Communication (XPC) and further abstracts the methods exposed by `IOBluetooth`.

4.1.2 iOS. *Apple's* mobile operating system is *iOS*, with derivatives called *iPadOS*, *tvOS*, and *watchOS*. On *iOS*, the Bluetooth chip is exposed as a serial character device[2] to user space. On initialization, `bluetoothd` directly connects to the exposed Bluetooth socket of this character device. Then, `bluetoothd` offers Bluetooth-related functionality as an XPC service. Similar to *macOS*, this XPC service is accessed by the public `CoreBluetooth` API. However, *iOS* `CoreBluetooth` does not allow apps to create and use Classic Bluetooth connections, which is slightly different from *macOS*. Instead, it offers a higher-level application protocol called *External Accessory* that can be used in combination with Made for iPhone/iPad/iPod (MFi) certified Bluetooth devices [5].

Even though HCI is not openly accessible, it is needed by system components. `bluetoothd` exposes a Mach port for features like HCI, which can only accessed by system components. This private framework is called `MobileBluetooth`.

4.1.3 RTKit and Marconi. For embedded devices, *Apple* is using a real-time operating system based on the *RTKit* framework. *RTKit* is used on multiple embedded controllers and in all recent Bluetooth peripherals, such as the *AirPods 1*, *2*, and *Pro*, *Siri Remote 2*, *Apple Pencil 2*, and *Smart Keyboard Folio*. While *RTKit* is not well-known, it has an incredibly high market share. For example, *AirPods* are accounted for 60 % of the global wireless earbud market [23]. Moreover, *RTKit* powers a number of other devices and chips in the *Apple* ecosystem, such as the Always-On Processor (AOP) firmware included in most of *Apple's* mobile devices like the *iPhone* and *AppleWatch*.

The *RTKit* framework lacks public documentation by *Apple* but has been briefly mentioned by other researchers [17]. The newest *AirPod Pro* firmware strings reveal version information, such as `RTKitAudioFrameworkW2`, `RTKitOSPlatform-620.60.2616`, and `RTKit2.2.Internal.sdk`. The latter lets us conclude that *Apple* has an internal Software Development Kit (SDK) used to develop *RTKit* applications.

We consolidate all these peripherals into a single Bluetooth stack, however, their firmware is very different due to their technologies and use cases. The *Siri Remote*, *Apple Pencil*, and *Smart Keyboard* only use BLE, while the *AirPods* rely on both BLE and Classic Bluetooth. Nonetheless, the basic *RTKit* code is the same.

On the *AirPods*, the communication to the Bluetooth chip is provided via the Apple Controller Interface (ACI) instead of the specification-compliant Host Controller Interface (HCI). This is because the *AirPods* use *Apple's* new Bluetooth chip *Marconi*. An older version of *Apple*'s proprietary Bluetooth *PacketLogger* contains a file `ACI_HCILib.xml`, which names and partially describes all ACI commands. Some of these are *AirPod*-specific, such as synchronization of a pair of *AirPods* and primary to secondary switching. The *Marconi* Bluetooth chip firmware itself is also based on the *RTKit* framework, as it is just another peripheral.

Note that it is very complex to debug root causes for crashes on the *AirPods*. As they are an embedded device, they reboot within approximately 2 s. Thus, a Bluetooth connection reset is indistinguishable from a device reboot when performing wireless tests.

4.2 MagicPairing Messages

The general layout of a *MagicPairing* message is shown in Figure 3a. It starts with a 2 B header followed by data depending on the type of the message. In general, there are two different types of messages with a slightly different structure. The first type, a *Key Message*, contains key material (such as the *AES SIV*, *Ratchet*, or *Hint* data). The second type, a *Short Message*, contains just one byte of data after the header. The data in the *Key Message* is in a Type Length Value (TLV) structure, as shown in Figure 3b. The number of keys is encoded after the header. The *Short Message* contains a fixed amount of data after the header.

The *MagicPairing Ping* message can initiate the protocol. When a device receives a *Ping* message, it replies with a *Hint* message. While the *Ping* message does not necessarily need any additional data, it is still 3 B with the data set to `0x00`. The *Status* message indicates success or, in case of an error, the reason for failing. The *Ratchet* type message seems to be currently unused, as its reception handler implementation is empty on *iOS* and *macOS* `bluetoothd`.

4.3 MagicPairing AirPods Advertisements

In addition to the pairing mechanism provided by *MagicPairing*, it also offers the capability to decrypt BLE advertisements sent by the *AirPods*. These advertisements have been shown to be linkable to *AirPods* in general [20]. Advertisements notify other *Apple* devices of the presence of the *AirPods* and encode battery state information. When an *iOS* device receives advertisements for a pair of *AirPods* that belong to the same *Apple* ID as the *iOS* device, a pop-up shows an *AirPod* image, the name of the *AirPods*, and the current battery state. The encrypted part constitutes the *MagicPairing* data. A new key is introduced, which is called *MagicPairing EncryptionKey*.

4.4 Code Quality

The *MagicPairing* implementations on *iOS* and *macOS* contain various spelling mistakes in logging messages, and in case of the *macOS* `bluetoothd` also in function names. For example, the words *Ratchet* and *Upload* were spelled differently various times. As these mistakes vary with the stack, each stack was probably implemented by a different developer. While spelling mistakes are not directly related to flaws in an implementation, they leave the impression the code was not extensively reviewed, and development probably outsourced.

[2] A character device is exposed for all *Broadcom* UART chips, which are at least present in the *iPhone 6*, *SE*, *7*, *8*, *X*, *XR*, and various *iPads*. *iOS* also supports *Marconi* (newer *AppleWatches*) and *Broadcom* PCIe (*iPhone XS* and *11*) Bluetooth chips.

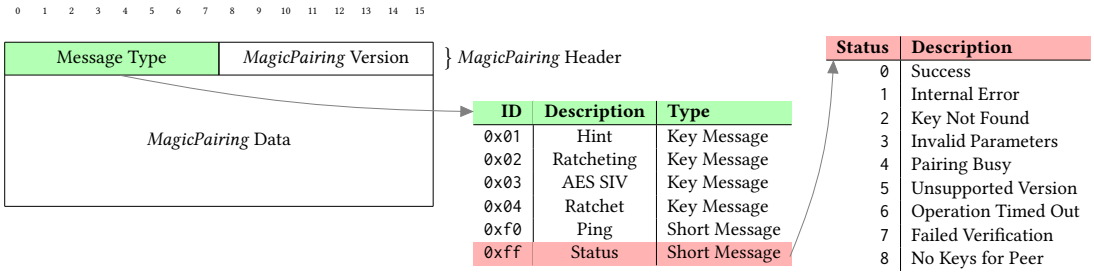

(a) *MagicPairing* message format.

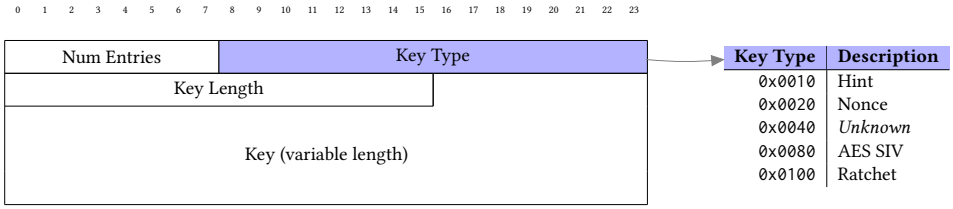

(b) *MagicPairing* key message data.

Figure 3: *MagicPairing* packet formats.

5 FUZZING WITH TOOTHPICKER

The wireless attack surface of *MagicPairing* is rather large. First of all, it is available prior to pairing—it provides a connection via the Logical Link Control and Adaptation Protocol (L2CAP), which is used for all kinds of data transfer within Bluetooth [7, p. 252]. Second, the *MagicPairing* attack surface is further enlarged by the different implementations for *iOS*, *macOS*, *RTKit*. Instead of using a common library, the *macOS* implementation is written in *Objective C*, the *iOS* implementation is based on *C/C++*, and the *RTKit* firmware on the *AirPods* is a slightly feature-restricted variant written in *C* [13]. Last, *MagicPairing* is always available on all *Apple* devices with Bluetooth enabled, no matter if the user owns *AirPods*.

Based on our knowledge about *MagicPairing* and its implementations, we perform further tests. We implement both a generic over-the-air fuzzer (Section 5.1) and an *iOS* in-process fuzzer (Section 5.2). While the over-the-air fuzzer is platform-independent and required to confirm vulnerabilities, it is limited in speed and does not provide coverage. In contrast, the *iOS* in-process fuzzer is faster and not limited by connection resets, but needs a lot of platform-specific tuning. Our overall setup is explained in Section 5.3. As we apply a rather specific tooling to enable *iOS* in-process fuzzing with FЯIDA, we further describe it in Section 5.4

5.1 Over-the-Air Fuzzing

An over-the-air fuzzer runs independently of the target system. Still, the protocol needs to be re-implemented to fuzz inputs. Our fuzzer extends *InternalBlue*, which already provides a generic interface to add custom protocols on top of existing Bluetooth stacks, including *iOS* and *macOS* [19]. This approach has two main advantages that cannot be reached with in-process fuzzing:

- **(+) Platform Independence** The fuzzer is independent of the target device's operating system or Bluetooth stack.
- **(+) Few False Positives** The fuzzer behaves just like any other Bluetooth peripheral. Anything found can be used comparatively easily for a PoC.

However, wireless Bluetooth fuzzing has various limitations that motivate us to also perform in-process fuzzing:

- **(-) Connection Termination** The connection is terminated once a few invalid packets are received. Thus, a lot of time is spent on reconnecting to the target. Moreover, it is difficult to nearly impossible to distinguish between a terminated connection and a crashed Bluetooth daemon.
- **(-) Speed** The fuzzer's speed is limited by the physical connection to the target.
- **(-) Coverage** Without collecting information from the target, the input cannot be adapted to trigger missing code paths.

As the *MagicPairing* protocol has low complexity, we implement a generation-based fuzzer, which randomly generates valid and invalid messages based on the reverse-engineered protocol definition. Apart from connecting to the target device, no further setup is required for fixed L2CAP channels. The fuzzer keeps sending the generated L2CAP payloads until it receives an `HCI_Disconnection_Complete` event (see [7, p. 2296]). This indicates that the target device either disconnected due to multiple invalid received messages or due to a crash. The fuzzer then tries to reconnect to the device.

The target device is additionally monitored using the *PacketLogger*, which is available for *macOS* and also on mobile devices since *iOS 13* with a *Bluetooth Profile* [3]. This enables us to determine if the device crashed and when the connection was terminated. A crash can be detected by searching for the message *"Connection to the iOS device has been lost."*

In practice, the `HCI_Disconnection_Complete` event is quite unreliable. In multiple occasions the connection was terminated, but the fuzzer did not receive the event. This lowers the efficiency of the fuzzer as it needs to estimate when a connection is terminated

in case it did not receive the disconnection event. Moreover, to reliably send packets and confirm events, we restricted the fuzzer speed to 1–2 packets/s. Despite the mentioned issues, the fuzzer ended up finding multiple bugs in the protocol implementations.

5.2 In-Process Fuzzing

An in-process, coverage-guided fuzzer improves the efficiency when fuzzing the reception handlers of interesting L2CAP-based protocols. While the throughput of messages and the stability of the payload delivery is much higher than in the over-the-air implementation, the in-process fuzzer comes with a different set of drawbacks.

- **(-) Many False Positives** The usual operation of the Bluetooth daemon is altered, which can lead to unexpected behavior or crashes that are related to the fuzzing operation itself.
- **(-) Platform Dependence** Injecting and preparing the fuzzer inside the target process differs significantly for different operating systems. Even within the same Bluetooth stack, function addresses and implementation details change with updated versions and need to be adapted.

We reduce the false positives by minimizing the amount of crashes related to the injected fuzzing code. This is done by observing any side-effects during fuzzing and patching the affected functions.

RTKit currently cannot be altered, thus, only the *macOS* and jailbroken *iOS* Bluetooth stack remain for in-process fuzzing. As *iOS* jailbreaks were comparably rare in the past but became available with *checkm8* and *checkra1n* recently [16], we implement an in-process fuzzer for *iOS*.

In practice, the *iOS* in-process fuzzer's speed varies between 5–30 packets/s. Though, as connections are not dropped with in-process fuzzing, the overall speedup is much higher.

5.3 Setup Overview

Figure 4 shows the fuzzing setup, with a main focus on the specialized in-process fuzzer. The in-process fuzzer is divided into two components: *(1)* The manager running on a computer, and *(2)* the fuzzing harness running on the target device.

The manager starts and maintains the fuzzing process. It injects the fuzzing harness into the target process and handles the communication with it. Additionally, it maintains a set of crashes occurred during fuzzing, a corpus to derive inputs, and coverage information collected during fuzzing. The manager generates new inputs by sending entries to the corpus of the input mutation component, which randomly mutates the input based on a seed.

The fuzzing harness is divided into two sub-components. The first component is a general fuzzing harness, which is responsible for the overall fuzzing of `bluetoothd`. It creates virtual connections and applies patches ensuring a stable fuzzing process. Moreover, it collects code coverage and receives fuzzing input from the manager. The second component, the specialized fuzzing harness, is specific to the target function and protocol to be fuzzed, such as *MagicPairing*. It is responsible for preparing the received input and calling the function handler, as well as any other preparation needed to fuzz the protocol-specific reception handler function.

The fuzzer is initialized with an initial corpus of valid protocol messages, i.e., function arguments. It then collects the initial coverage by sending the initial corpus to the fuzzing harness. The specialized harness executes the payloads. The collected coverage is returned to the manager.

Once the initial coverage is collected, the actual fuzzing begins. The manager picks one of the entries in the corpus and a seed value. These are passed to the input mutator, which mutates the input and sends it back to the manager. The manager sends the mutated input to the specialized fuzzing harness. If desired, the specialized fuzzing harness further mutates the input—which is required for fields that require deterministic values or length fields. In this case, the specialized fuzzing harness first reports the modified input back to the manager before calling the function under test. This ensures that the additional mutation is saved, even when the injected harness crashes together with the target. While the function is called, the harness collects basic block coverage. There are three possible results of the function call:

- **Ordinary Return** The function was executed successfully and returns. The collected coverage is reported to the manager.
- **Exception** The function results in an exception, which is returned to the manager. The manager stores the input and the exception as a crash.
- **Uncontrolled Crash** The target, i.e., `bluetoothd`, crashes in a thread not controlled by the fuzzing harness. It crashes and generates a crash report. In this case, the exception cannot be sent to the manger. However, the manager detects this crash and stores the generated input as a crash. The corresponding crash report is manually gathered from the operating system.

These results may contain false positives, even in the case of an exception. Therefore, we verify identified crashes with the over-the-air fuzzer.

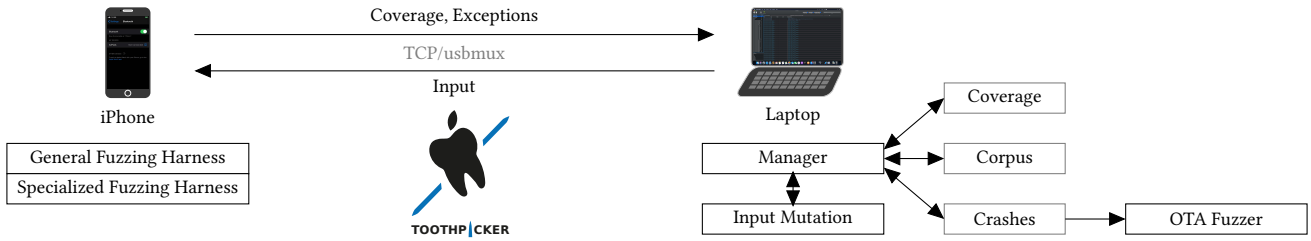

Figure 4: *ToothPicker* fuzzing setup.

5.4 Attaching the In-Process Fuzzer

Our in-process fuzzer is based on `frizzer` [18], which provides a basic fuzzing architecture including coverage collection, corpus handling, and input mutation. These are already a large part of the manager component. Our fuzzer, like `frizzer`, is built on FЯIDA, which is a dynamic instrumentation toolkit [22]. FЯIDA can inject code into a target process using *JavaScript*. Thus, our fuzzing harness is implemented in *JavaScript* and injected into `bluetoothd`. The manager is implemented in *Python*, as FЯIDA also provides *Python* bindings. We use the test case generator `radamsa` as input generator component [14].

On *iOS*, `bluetoothd` is lacking symbols. Nonetheless, we can identify various functions through static reverse engineering. These include creating a BLE handle, or creating an ACL handle, which is needed to receive L2CAP data. Due to the lack of symbols, we need to resolve function pointers via their static offsets to make them callable with FЯIDA. In the following example, these offsets are valid for an *iPhone 7* on *iOS 13.3*. In Listing 2, we call the function that creates an ACL handle. The input arguments are a Bluetooth address, and another state value set to `0` as found by dynamic analysis. Similar to calling the ACL connection creation function, we also call the specialized *MagicPairing* handler.

Even fake connections created as in Listing 2 can be disconnected. We keep the connection alive by overwriting the function `OI_HCI_ReleaseConnection`, named according to the debug strings. Hooking and replacing such functions prevents connection structures from being destroyed.

Note that this in-process fuzzing disconnection prevention does not work for over-the-air fuzzing. When a connection is initiated by the Bluetooth chip itself, it holds an HCI handle, which the stack uses to reference the connection. Moreover, the chip holds additional state to keep the connection alive. While we can control `bluetoothd` with FЯIDA hooks, we cannot overwrite chip-internal behavior.

```
// Create a buffer for the Bluetooth address
var bd_addr = Memory.alloc(6);
// Resolve function address
var base = Module.getBaseAddress("bluetoothd");
var fn_addr = base.add(0xc81a0);  // iOS 13.3, iPhone 7
// Create JavaScript-callable function reference
var allocateACLConnection = new NativeFunction(fn_addr,
     "pointer", ["pointer","char"]);
// Write a (random) Bluetooth address to memory
bd_addr.writeByteArray([0xca,0xfe,0xba,0xbe,0x13,0x37]);
// Call the function and create a forged ACL connection
var handle = allocateACLConnection(bd_addr, 0);
```

Listing 2: Creating a forged ACL handle using FЯIDA.

```
Exception Type:  EXC_BAD_ACCESS (SIGSEGV)
Exception Subtype: KERN_INVALID_ADDRESS at
     0x00000000000000a8
VM Region Info: 0xa8 is not in any region. Bytes before
     following region: 4298293080
[...]
Termination Signal: Segmentation fault: 11
Termination Reason: Namespace SIGNAL, Code 0xb
Terminating Process: exc handler [958]
```

Listing 3: Excerpt of an *MP1*-related crash log.

6 VULNERABILITIES IN THE MAGICPAIRING IMPLEMENTATIONS

In the following, the identified vulnerabilities in the *MagicPairing* protocol are described. All vulnerabilities are summarized in Table 1.

6.1 Null Pointer Dereferences

Testing the *MagicPairing* protocol resulted in multiple `NULL` pointer dereferences or dereferencing addresses in the `NULL` page. The `NULL` page is not mapped on 64 bit *iOS* and *macOS*. This results in a `bluetoothd` crash. `launchd` immediately restarts `bluetoothd` after crashing. Thus, these bugs are merely a `bluetoothd` DoS. An attacker does not have any control over the dereferenced value, and we assume that these dereferences are not exploitable.

6.2 MP1: iOS Ratcheting

When sending a *MagicPairing Ping* message to an *iOS* device from a Bluetooth device that is not a known pair of *AirPods*, it responds that it does not have a hint for this sending device. If a *Ratcheting* message is then sent to the device, `bluetoothd` will crash while trying to dereference a pointer in the `NULL` page. Listing 3 shows an excerpt of the crash log that is generated by the operating system.

The invalid access to address `0xa8` is caused by a missing check for the return value of a lookup function shown in Listing 4. The function looks up an entry in `bluetoothd`'s table of known *MagicPairing* devices by the sender's Bluetooth address and returns `NULL`. The issue is that this return value is never checked and assumed to be a pointer to a valid *MagicPairing*-related structure. Then, to respond to the *Ratcheting* message, the structure is accessed at offset `0xa8`, which leads to the crash.

6.3 MP2–5: macOS/iOS Hint and Ratcheting

MP2–5 have a similar cause as the previous dereference in *MP1*. The return value of the lookup function is not properly verified. On *iOS* and *macOS*, this affects the *Ratcheting (MP1, MP3, MP5)* and the *Hint (MP2, MP4)* messages. As before, they lead to a dereference of an invalid address, which is a fixed offset into a *MagicPairing* structure at address `0x0`. Thus, all vulnerabilities are equally unlikely to be exploitable, other than crashing `bluetoothd`. The reason why the *Ratcheting* messages lead to different crashes on *iOS* is that the order of keys in the message determines which fields in the `mp_entry` are accessed.

```
void recv_mp_ratchet_aes_siv(char *bd_addr, char *data) {
    [...]
    // Returns NULL for unknown Bluetooth addresses
    mp_entry = lookup_mp_entry_by_bd_addr(bd_addr);
    [...]
    // The NULL entry is dereferenced with an offset
    memmove(mp_entry->remoteAESSIV, data + aessiv_offset,
         0x36);
}
```

Listing 4: Pointer dereference *MP1*.

Table 1: List of identified *MagicPairing* and L2CAP vulnerabilities, status as of April 28 2020.

ID	Attack	Effect	Detection Method	OS	Disclosure	Status
MP1	Ratcheting	Crash	Over-the-Air, In-Process	iOS	Oct 30 2019	Not fixed
MP2	Hint	Crash	Over-the-Air, In-Process	iOS	Dec 4 2019	Not fixed
MP3	Ratcheting	Crash	Over-the-Air	macOS	Oct 30 2019	Not fixed
MP4	Hint	Crash	Over-the-Air	macOS	Oct 30 2019	Not fixed
MP5	Ratcheting	Crash	In-Process	iOS	Mar 13 2020	Not fixed
MP6	Ratcheting Abort	Crash	In-Process	iOS	Mar 13 2020	Not fixed
MP7	Ratcheting Loop	100 % CPU Load	Over-the-Air	macOS	Oct 30 2019	Not fixed
MP8	Pairing Lockout	Disassociation	Manual	iOS & macOS	Feb 16 2020	Not fixed
L2CAP1	L2CAP Zero-Length	Crash	Over-the-Air	RTKit	Dec 4 2019	Not fixed
L2CAP2	L2CAP Groups	Crash	In-Process	iOS 5–13	Mar 13 2020	Not fixed

6.4 MP6: Ratcheting Abort

This crash is caused by an assertion failure that leads to an `abort`. The code that parses the *Ratcheting* message attempts to read from the message buffer. An assertion ensures that it does not read beyond this buffer. However, if the assertion fails, the parser does not return gracefully and instead calls `abort`, which leads to the termination of `bluetoothd`.

6.5 MP7: Ratcheting Loop

The *macOS* `bluetoothd` can be forced to enter a ratcheting loop with a very large iteration count. Unlike the previous vulnerabilities, this issue is not solely caused by implementation mistakes, but originates from an inherent problem in the protocol's design. The receiver trusts the values sent in the *Hint* message, without verifying that it was actually sent by a known *MagicPairing* peer. An attacker can forge the *Ratchet* value in the *Hint* message. The *Hint* message also includes a nonce, but this is random. The *Hint* value itself, which is encrypted and could be used to verify the sender's Bluetooth address, is ignored. Instead, *macOS* trusts the connection's Bluetooth address.

Setting the *Ratchet* to a very high value will cause `bluetoothd` to enter a long ratcheting loop. The *Ratchet* field holds a 4 B value, thus the maximum value of a *Ratchet* can be `0xffffffff`. During normal usage, however, the *Ratchet* is only incremented for every pairing process. Therefore, it is rather small in practice. The attack was tested on a *MacBook Pro Early 2015, 13-inch, 2.9 GHz Dual Core i5* on *macOS Catalina 10.15* with an initial *Ratchet* value of `2`. Sending a *Hint* message with a *Ratchet* value of `0xffffffff` caused `bluetoothd` to enter a ratcheting loop, with the local *Ratchet* value increasing at a rate of approximately 7000/s—causing a ratcheting loop running multiple days.

During the ratcheting loop attack, the `bluetoothd` reception thread is blocked. This disables further Bluetooth-based communication, for example, the device under attack can no longer receive files via *AirDrop*.

6.6 MP8: Pairing Lockout

It is possible to corrupt the established pairing between an *iOS* or *macOS* device and a pair of *AirPods*. For this, an attacker needs to know the victim's Bluetooth address as well as the target *AirPods*' Bluetooth address. The attacker can manipulate the local ratchet value of a host device by sending one or more *Ratcheting* messages with a ratchet value higher than the device's current one. The current ratchet value can be obtained by sending a *Ping* message to the host. It responds with a *Hint* message, which contains its current local ratchet value. This value can then be incremented and sent in a *Ratcheting* message. The keys for encrypting the *AES-SIV* value are not required, as the ratchet value is sent in plaintext. Therefore, an attacker can set a bogus value for the *AES-SIV* part of the message and set the incremented ratchet value. Then, the receiving host starts a ratcheting loop. As `bluetoothd` on *iOS* has a timeout functionality, the forged ratchet value should not be chosen too high. Once the ratcheting loop is finished, the host's local ratchet value is successfully increased, even if the decryption of the *AES-SIV* entry of the message fails. This corrupts an active pairing because the *AirPods* have a threshold value for the discrepancy between their local ratchet value and the value received by the paired host.

This causes the *AirPods* to decline the continuation of the *MagicPairing* protocol and thus the whole pairing process. The user does not have any options to reset the *MagicPairing* data and does not get any feedback about the error. The only solution is to reset the *AirPods* and freshly pair them with the user's *iCloud* account.

As shown in Figure 5, the attack can be conducted as follows:

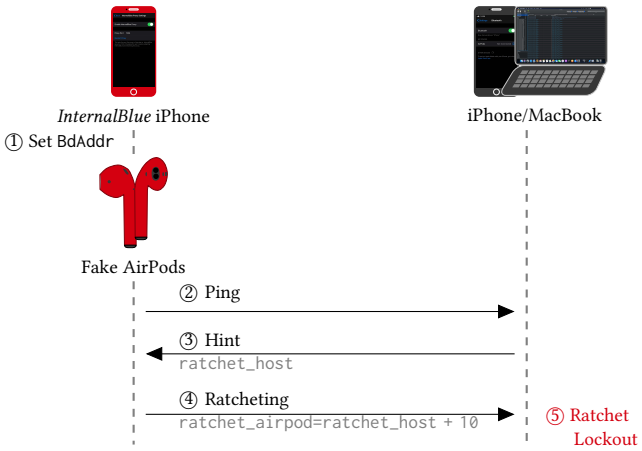

Figure 5: Lockout attack.

(1) The attacker changes their Bluetooth address to that of the target's *AirPods*.
(2) The attacker connects to the victim and sends a *Ping* message[3] to initiate a *MagicPairing* process.
(3) The victim responds with a *Hint* message which contains its current local ratchet value.
(4) The attacker increases this value by 10 and sends a *Ratcheting* message with the incremented ratchet value and a random *AES-SIV* value.
(5) The victim will start the ratcheting loop with the received ratchet value and derive the *SIV Key* for decrypting the *AES-SIV* value. As the *AES-SIV* value is random, the victim will not be able to decrypt it and sends a *Status* message indicating an internal error. However, its local ratchet value stays incremented and is not reset to its previous value.

The issue originates from using an untrusted ratchet to increment an internal value and execute a key rotation. As the ratchet value is neither encrypted nor authenticated, an attacker can easily forge the ratchet.

A solution to this problem is to only store the incremented ratchet value and the rotated key when the *AES-SIV* part of the message was successfully decrypted. Otherwise, the whole *MagicPairing* message should be considered untrusted and the ratchet value should stay as it was before.

6.7 L2CAP1: L2CAP Zero-Length

While fuzzing *MagicPairing* over-the-air, we identified a crash in the *RTKit* Bluetooth stack, more specifically, the *AirPods 1* and *2*. When sending an L2CAP message with the length field set to zero and no payload, the *AirPods* crash. As there are no publicly documented debugging capabilities for the *AirPods*, it is not possible to tell whether the Bluetooth thread or the whole operating system crashes. We observe that the music stops playing, the connected *iPhone* reports the *AirPods* as disconnected, and after a few seconds, the *AirPods* play a sound indicating a successful connection.

6.8 L2CAP2: L2CAP Groups

This crash is another `NULL` pointer dereference, albeit more severe than the previous ones. It is accessible via both BLE and Classic Bluetooth and is part of *L2CAP Group* feature. This is indicated by logging messages in the crashing function that mention the file `corestack/l2cap/group.c`. However, the *L2CAP Group* feature is no longer supported since Bluetooth 1.1. We assume the group reception function has been accidentally left in the code. In the newest Bluetooth specification, the channel ID `0x0002` is reserved for connectionless traffic instead of group traffic [7, p. 1035].

Depending on the data that is received, the *L2CAP Group* handler tries to find a matching entry in a function table allocated on the heap. However, this table has only been allocated, not initialized. Thus, all its entries are zero. When the payload starts with a `NULL` byte, the first entry is identified as matching entry. The code then tries to jump to the function pointer stored in that table entry, which also is a `NULL` pointer. However, any control over this table would immediately result in control over the instruction pointer. In addition to an *iPhone 7* on *iOS 13.3*, we were able to reproduce the crash on an *iPad 2* with *iOS 9.3.5* (released on August 25 2016), and an *iPhone 4* with *iOS 5.0.1* (released on November 10 2011). While the crash is not critical per se, it shows how long the *iOS* Bluetooth stack has not been tested. As *iOS 5* and *9* still had another Bluetooth stack architecture, the crash happens within `BTServer` instead of `bluetoothd`.

[3]The attacker could also send regular *MagicPairing AirPod* advertisements (Section 4.3), but they are encrypted and regularly change.

7 CONCLUSION

In this paper, we showed how *Apple* deals with seamless pairing of Bluetooth peripherals in their large connected ecosystem. While *MagicPairing* is proprietary, its general ideas and techniques can be integrated into other IoT ecosystems. Furthermore, other Bluetooth peripheral vendors could benefit from the *MagicPairing* protocol and infrastructure. All *Apple* needs to do is to provide an API that lets developers generate and receive an *Accessory Key* that is stored in the user's *iCloud* account. Vendors could then implement *MagicPairing* in their products and benefit from the same security properties and seamless pairing experience as the *AirPods*.

Apple's three different Bluetooth stacks for *iOS*, *macOS*, and *RTKit* also reflect the variety of Bluetooth implementations outside of their ecosystem. Many vendors choose to implement their own stacks and protocols. This makes efficient testing of Bluetooth devices challenging, but our over-the-air fuzzing setup based on *InternalBlue* can also be useful to test further Bluetooth stacks. As *MagicPairing* is a rather simple protocol, over-the-air fuzzing was sufficient to identify multiple vulnerabilities, despite the lack of speed and coverage information. However, our *iOS*-based in-process fuzzer had better performance in practice.

Overall, *Apple* keeps their Bluetooth ecosystem rather closed to third-party vendors. Already using Classic Bluetooth requires them to apply for MFi. However, this enables an overall smooth user experience. Bluetooth runs silently in the background most of the time and manages tasks like *AirDrop* and *Handoff* [12, 27]. Since *iOS 13*, the Bluetooth icon has been removed from the status bar, even during audio streaming. Any incentive for disabling Bluetooth in the *Apple* ecosystem is missing.

While all of this is great for user experience, we were surprised by the vulnerabilities uncovered within *MagicPairing*. We assume that this protocol never had an extensive code review and was never fuzzed before integrating it as always-active Bluetooth background service. We are looking forward to *Apple* integrating patches for the vulnerabilities we identified, but also hope that they will elaborate their other wireless protocols better in the future.

ACKNOWLEDGMENTS

We thank Bianca Mix, Oliver Pöllny, Alexander Heinrich, and Teal Starsong for proofreading this paper. Moreover, we thank Matthias Hollick for his feedback and Anna Stichling for the *ToothPicker* logo.

This work has been funded by the German Federal Ministry of Education and Research and the Hessen State Ministry for Higher Education, Research and the Arts within their joint support of the National Research Center for Applied Cybersecurity ATHENE, as well as by the Deutsche Forschungsgemeinschaft (DFG) – SFB 1119 – 236615297.

REFERENCES

[1] Daniele Antonioli, Nils Ole Tippenhauer, and Kasper Rasmussen. 2020. BIAS: Bluetooth Impersonation AttackS. In *Proceedings of the IEEE Symposium on Security and Privacy (S&P)*.

[2] Daniele Antonioli, Nils Ole Tippenhauer, and Kasper B. Rasmussen. 2019. The KNOB is Broken: Exploiting Low Entropy in the Encryption Key Negotiation Of Bluetooth BR/EDR. https://www.usenix.org/conference/usenixsecurity19/presentation/antonioli. In *28th USENIX Security Symposium (USENIX Security 19)*. USENIX Association, Santa Clara, CA, 1047–1061.

[3] Apple. 2020. Bug Reporting—Profiles and Logs. https://developer.apple.com/bug-reporting/profiles-and-logs/.

[4] Apple. 2020. Developer Documentation – IOKit. https://developer.apple.com/documentation/iokit.

[5] Apple. 2020. MFi Program. https://developer.apple.com/programs/mfi/.

[6] Eli Biham and Lior Neumann. 2018. Breaking the Bluetooth Pairing: Fixed Coordinate Invalid Curve Attack. http://www.cs.technion.ac.il/~biham/BT/bt-fixed-coordinate-invalid-curve-attack.pdf.

[7] Bluetooth SIG. 2020. Bluetooth Core Specification 5.2. https://www.bluetooth.com/specifications/bluetooth-core-specification.

[8] Nikita Borisov, Ian Goldberg, and Eric A. Brewer. 2004. Off-the-record communication, or, why not to use PGP. In *Proceedings of the 2004 ACM Workshop on Privacy in the Electronic Society, WPES 2004, Washington, DC, USA, October 28, 2004*, Vijay Atluri, Paul F. Syverson, and Sabrina De Capitani di Vimercati (Eds.). ACM, 77–84. https://doi.org/10.1145/1029179.1029200

[9] Jiska Classen. 2019. All Wireless Communication Stacks are Equally Broken.

[10] Jiska Classen, Daniel Wegemer, Paul Patras, Tom Spink, and Matthias Hollick. 2018. Anatomy of a Vulnerable Fitness Tracking System: Dissecting the Fitbit Cloud, App, and Firmware. In *PACM on Interactive, Mobile, Wearable and Ubiquitous Technologies (IMWUT)*.

[11] Dan Harkins. 2008. *Synthetic Initialization Vector (SIV) Authenticated Encryption Using the Advanced Encryption Standard (AES)*. RFC 5297. RFC Editor. https://tools.ietf.org/html/rfc5297

[12] Alexander Heinrich. 2019. Analyzing Apple's Private Wireless Communication Protocols with a Focus on Security and Privacy.

[13] Dennis Heinze. 2020. ToothPicker: Enabling Over-the-Air and In-Process Fuzzing Within Apple's Bluetooth Ecosystem.

[14] Aki Helin. 2020. radamsa - a general-purpose fuzzer. https://gitlab.com/akihe/radamsa.

[15] Konstantin Hypponen and Keijo MJ Haataja. 2007. "Nino" Man-in-the-Middle Attack on Bluetooth Secure Simple Sairing. In *3rd IEEE/IFIP International Conference in Central Asia on Internet*. IEEE.

[16] Kim Jong Cracks. 2020. checkra1n—iPhone 5s – iPhone X, iOS 12.3 and up. https://checkra.in/.

[17] Jonathan Levin. 2019. *New OSX Book, Volume II, *iOS Internals::Kernel Mode*. 20–22 pages. http://newosxbook.com

[18] Dennis Mantz. 2019. Frida-based general purpose fuzzer. https://github.com/demantz/frizzer.

[19] Dennis Mantz, Jiska Classen, Matthias Schulz, and Matthias Hollick. 2019. InternalBlue - Bluetooth Binary Patching and Experimentation Framework. In *The 17th Annual International Conference on Mobile Systems, Applications, and Services (MobiSys '19)*. https://doi.org/10.1145/3307334.3326089

[20] Jeremy Martin, Douglas Alpuche, Kristina Bodeman, Lamont Brown, Ellis Fenske, Lucas Foppe, Travis Mayberry, Erik Rye, Brandon Sipes, and Sam Teplov. 2019. Handoff All Your Privacy–A Review of Apple's Bluetooth Low Energy Continuity Protocol. *Proceedings on Privacy Enhancing Technologies* 2019, 4 (2019), 34–53.

[21] Trevor Perrin and Moxie Marlinspike. 2016. The Double Ratchet Algorithm. https://signal.org/docs/specifications/doubleratchet/doubleratchet.pdf

[22] Ole André V. Ravnås. 2020. Frida - A world-class dynamic instrumentation framework. https://frida.re/.

[23] Don Reisinger. 2019. Apple's AirPods Business Is Bigger Than You Think. https://fortune.com/2019/08/06/apple-airpods-business/.

[24] Phillip Rogaway and Thomas Shrimpton. 2006. A Provable-Security Treatment of the Key-Wrap Problem. In *Advances in Cryptology - EUROCRYPT 2006, 25th Annual International Conference on the Theory and Applications of Cryptographic Techniques, St. Petersburg, Russia, May 28 - June 1, 2006, Proceedings (Lecture Notes in Computer Science)*, Serge Vaudenay (Ed.), Vol. 4004. Springer, 373–390. https://doi.org/10.1007/11761679_23

[25] Mike Ryan. 2013. Bluetooth: With Low Energy Comes Low Security. In *Presented as part of the 7th USENIX Workshop on Offensive Technologies*. https://www.usenix.org/system/files/conference/woot13/woot13-ryan.pdf

[26] Shaked, Yaniv and Wool, Avishai. 2005. Cracking the Bluetooth PIN. In *Proceedings of the 3rd International Conference on Mobile Systems, Applications, and Services*. ACM.

[27] Milan Stute, Sashank Narain, Alex Mariotto, Alexander Heinrich, David Kreitschmann, Guevara Noubir, and Matthias Hollick. 2019. A Billion Open Interfaces for Eve and Mallory: MitM, DoS, and Tracking Attacks on iOS and macOS Through Apple Wireless Direct Link. https://www.usenix.org/conference/usenixsecurity19/presentation/stute. In *28th USENIX Security Symposium (USENIX Security 19)*. USENIX Association, Santa Clara, CA, 37–54.

[28] Davide Toldo. 2019. Analyzing the macOS Bluetooth Stack.

[29] Maximilian von Tschirschnitz, Ludwig Peuckert, Fabian Franzen, and Jens Grossklags. 2020. Method Confusion Attack on Bluetooth Pairing. In *Under submission*.