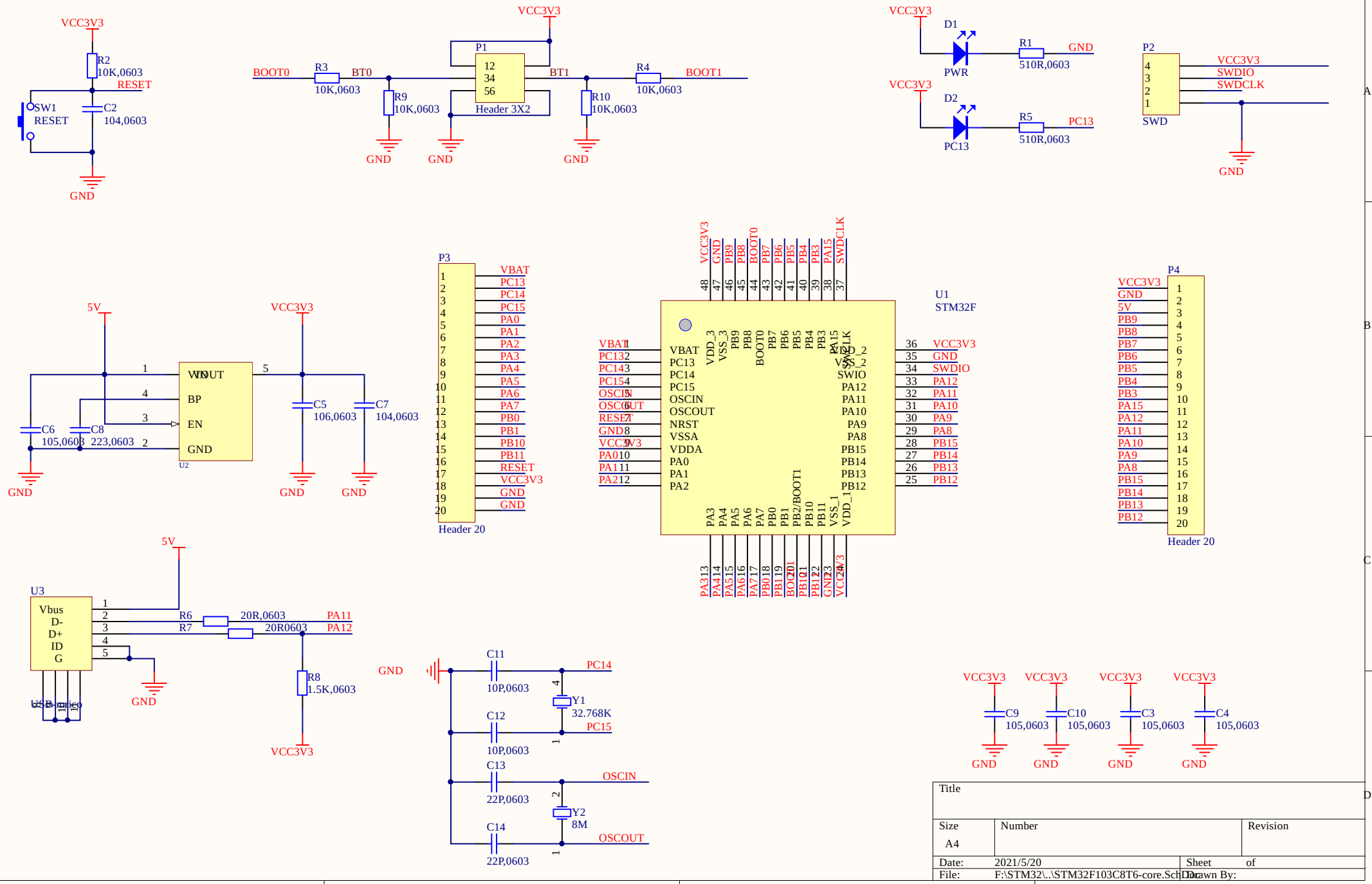
VCC3V3
R2
10K,0603
RESET
SW1
RESET
C2
104,0603
GND
BOOT0
R3
10K,0603
BT0
R9
10K,0603
P1
12
34
56
Header 3X2
BT1
R4
10K,0603
BOOT1
R10
10K,0603
D1
PWR
R1
510R,0603
D2
PC13
R5
510R,0603
P2
SWD
SWDIO
SWDCLK
5V
U2
VIN
VOUT
BP
EN
C5
106,0603
C7
104,0603
C6
105,0603
C8
223,0603
P3
Header 20
U1
STM32F
VBAT
PC13
PC14
PC15
OSCIN
OSCOUT
NRST
VSSA
VDDA
PA0
PA1
PA2
SWIO
PA12
PA11
PA10
PA9
PA8
PB15
PB14
PB13
PB12
P4
Header 20
U3
Vbus
D-
D+
ID
G
R6
20R,0603
R7
20R0603
PA11
PA12
R8
1.5K,0603
C11
10P,0603
C12
10P,0603
C13
22P,0603
C14
22P,0603
Y1
32.768K
Y2
8M
OSCIN
OSCOUT
C9
105,0603
C10
105,0603
C3
105,0603
C4
105,0603
Title
Size
A4
Number
Revision
Date: 2021/5/20
Sheet of
File: F:\STM32\..\STM32F103C8T6-core.SchDoc
Drawn By: