PARKWAY VILLAGE : EAST

SALEM, OREGON 97303

PROJECT TEAM:

OWNER:
SALEM HOUSING AUTHORITY
360 CHURCH STREET. , SE
SALEM, OREGON 97308-0808
CONTACT: ANDY WILCH
503.588.6448

ARCHITECT:
CARLETON HART ARCHITECTURE
322 NW 8TH AVENUE
PORTLAND, OREGON 97209
CONTACT: DEVIN FOLLINGSTAD
503.206.3185

DEVELOPMENT CONSULTANT:
HOUSING DEVELOPMENT CENTER
847 NE 19TH AVE., SUITE 150
PORTLAND, OREGON 97232
CONTACT: FRANCE FITZPATRICK
503.528.5193

GENERAL CONTRACTOR:
LMC CONSTRUCTION
19200 SW TETON AVENUE
TUALATIN, OREGON 97062
CONTACT: RYAN DUFFIN
503.646.0521

STRUCTURAL:
TM RIPPEY CONSULTING ENGINEERS
7650 SW BEVELAND ST., SUITE 100
TIGARD, OREGON 97223
CONTACT: DOUG GANNETT
503.443.3900

MECHANICAL/ELECTRICAL/PLUMBING:
MKE & ASSOCIATES
6915 SW MACADAM AVE., SUITE 200
PORTLAND, OREGON 97209
CONTACT: RICHARD DUSA
503.892.1188

PROJECT DESCRIPTION:

THIS PROJECT INCLUDES REHABILITATION OF ELEMENTS OF AN EXISTING MULTI-FAMILY RESIDENTIAL DEVELOPMENT. THE ORIGINAL FACILITY WAS CONSTRUCTED IN 1997.

SITE WORK: REFER TO SITE PACKAGE UNDER SEPARATE COVER FOR SCOPE OF WORK.

EXTERIOR WORK:
- DEMOLITION:

EXISTING ITEMS TO BE DEMOLISHED INCLUDE, BUT ARE NOT LIMITED TO: ROOFING, UNDERLAYMENT, ASSOCIATED FLASHINGS, SIDING, EXTERIOR SHEATHING, DOORS, WINDOWS, ASSOCIATED WEATHER BARRIERS AND FLASHINGS.
- NEW WORK:

NEW ROOFING, GUTTERS, AND DOWNSPOUTS, WALL SHEATHING, SIDING, WINDOWS, AND DOORS AT ALL BUILDINGS. PARTIAL REPLACEMENT OF ROOF SHEATHING. PARTIAL REPLACEMENT OF FRAMING AND CAVITY INSULATION. REPLACEMENT OF EXTERIOR DECKS AND DECK RAILS.

INTERIOR WORK:
- DEMOLITION:

CRAWL SPACE: VAPOR BARRIER, SELECT FRAMING MEMBERS, SELECT GYPSUM BOARD, PARTIAL FLOOR SHEATHING AND INSULATION.
GROUND FLOOR: ALL FLOORING, CABINETS, COUNTERTOPS AND PLUMBING FIXTURES. ACCESSIBLE UNITS TO HAVE FRAMING AND ELECTRICAL DEMOLITION.
SECOND/THIRD FLOORS: NO WORK EXCEPT FIRE SPRINKLERS AT THREE STORY BUILDINGS.
ATTIC: MISCELLANEOUS DRAFT STOP AND DUCT WORK.
- NEW WORK:

PARTIAL REPLACEMENT OF FLOOR SHEATHING IN ALL GROUND FLOOR UNITS. REPLACEMENT OF FLOOR FINISHES, FIXTURES, AND CABINETS AT ALL GROUND FLOOR UNITS. REPLACEMENT OF EXHAUST FANS AT ALL BATHROOMS AND LAUNDRY AREAS. NEW LINT TRAPS AT ALL DRYERS. PARTIAL REPLACEMENT OF APPLIANCES AT SELECT UNITS.

DEFERRED SUBMITTALS:
- FIRE SUPPRESSION
- FIRE DETECTION AND ALARM

DRAWING SHEET INDEX:

ARCHITECTURAL:

A0.01	COVER SHEET
A0.02	GENERAL INFORMATION
SURVEY	(REFERENCE ONLY)
A1.01	OVERALL SITE PLAN (REFERENCE ONLY)
A1.02	SITE PLAN - EAST
A2.01	FIRST FLOOR PLAN - BUILDING 03
A2.02	SECOND FLOOR PLAN - BUILDING 03
A2.03	ROOF PLAN - BUILDING 03
A2.11	FLOOR PLANS - BUILDING 04
A2.12	ROOF PLAN - BUILDING 04
A2.21	FLOOR PLANS - BUILDING 05
A2.22	FLOOR & ROOF PLANS - BUILDING 05
A2.31	FLOOR PLANS - BUILDING 06
A2.32	ROOF PLAN - BUILDING 06
A2.41	FLOOR & ROOF PLANS - GARAGE
A2.70	EXTERIOR DECK TYPE A-1 - PLANS
A2.71	EXTERIOR DECK TYPE A-1 - ELEVATIONS
A2.72	EXTERIOR DECK TYPE B-1 - PLANS
A2.73	EXTERIOR DECK TYPE B-1 - ELEVATIONS
A2.74	EXTERIOR DECK TYPE C-1 - PLANS
A2.75	EXTERIOR DECK TYPE C-1 - ELEVATIONS
A2.76	EXTERIOR DECK TYPE D-1 - PLANS
A2.77	EXTERIOR DECK TYPE D-1 - ELEVATIONS
A3.01	EXTERIOR ELEVATIONS - BUILDING 03
A3.02	EXTERIOR ELEVATIONS - BUILDING 03
A3.11	EXTERIOR ELEVATIONS - BUILDING 04
A3.12	EXTERIOR ELEVATIONS - BUILDING 04
A3.21	EXTERIOR ELEVATIONS - BUILDING 05
A3.22	EXTERIOR ELEVATIONS - BUILDING 05
A3.31	EXTERIOR ELEVATIONS - BUILDING 06
A3.32	EXTERIOR ELEVATIONS - BUILDING 06
A3.41	EXTERIOR ELEVATIONS - GARAGE
A3.42	EXTERIOR ELEVATIONS - GARAGE
A5.01	EXTERIOR DETAILS: WALL SECTIONS
A5.02	EXTERIOR DETAILS: ASSEMBLY TYPES
A5.03	EXTERIOR DETAILS: FOUNDATION
A5.04	EXTERIOR DETAILS: FOUNDATION
A5.05	EXTERIOR DETAILS: FOUNDATION
A5.06	EXTERIOR DETAILS: SIDING
A5.07	EXTERIOR DETAILS: SIDING
A5.08	EXTERIOR DETAILS: HEAD FLASHING
A5.09	EXTERIOR DETAILS: APPURTENANCE
A5.10	EXTERIOR DETAILS: APPURTENANCE
A5.11	EXTERIOR DETAILS: DECKS
A5.12	EXTERIOR DETAILS: DECKS
A5.13	EXTERIOR DETAILS: DECKS
A5.14	EXTERIOR DETAILS: DOORS & WINDOWS
A5.15	EXTERIOR DETAILS: DOORS & WINDOWS
A5.16	EXTERIOR DETAILS: DOORS & WINDOWS
A5.17	EXTERIOR DETAILS: ROOF
A5.18	EXTERIOR DETAILS: ROOF
A5.21	WINDOW INSTALLATION SEQUENCE
A5.61	DOOR / WINDOW SCHEDULES
A6.01	ENLARGED UNIT PLANS - 2 BEDROOM - ACCESSIBLE
A6.02	ENLARGED UNIT PLANS - 2 BEDROOM - TYPICAL
A6.11	ENLARGED UNIT PLANS - 3 BEDROOM 1 BATH - ACCESSIBLE
A6.12	ENLARGED UNIT PLANS - 3 BEDROOM 1 BATH - TYPICAL
A6.21	ENLARGED UNIT PLANS - 3 BEDROOM 2 BATH - ACCESSIBLE
A6.22	ENLARGED UNIT PLANS - 3 BEDROOM 2 BATH - TYPICAL
A6.30	ACCESSIBLE FIXTURE INSTALLATION DIMENSIONS
A6.31	INTERIOR ELEVATIONS - 2 BEDROOM - TYPICAL
A6.32	INTERIOR ELEVATIONS - 2 BEDROOM - ACCESSIBLE
A6.41	INTERIOR ELEVATIONS - 3 BEDROOM 1BATH - TYPICAL
A6.42	INTERIOR ELEVATIONS - 3 BEDROOM 1 BATH - ACCESSIBLE
A6.51	INTERIOR ELEVATIONS - 3 BEDROOM 2 BATH - TYPICAL
A6.52	INTERIOR ELEVATIONS - 3 BEDROOM 2 BATH - ACCESSIBLE
A6.61	FINISH SCHEDULES
A7.01	INTERIOR DETAILS

STRUCTURAL:

S1.01	GENERAL STRUCTURAL NOTES
S2.01	BUILDING 03 - FIRST FLOOR PLAN
S2.02	BUILDING 04 - FIRST FLOOR PLAN
S2.03	BUILDING 05 - FIRST FLOOR PLAN
S2.04	BUILDING 06 - FIRST FLOOR PLAN
S3.01	DECK FRAMING PLANS
S3.02	DECK FRAMING PLANS
S4.01	UNIT 2 TYPE 'A' FRAMING PLAN AND DETAILS
S5.01	FOUNDATION & CRAWLSPACE DECK DETAILS
S6.01	DECK, FLOOR & ROOF FRAMING DETAILS

VICINITY MAP: (NOT TO SCALE)

PROJECT INFORMATION:

ADDRESS & LOT DESCRIPTION:
3137-3167 7TH PLACE NE
SALEM, OR 97303
TAX ACCT. #: 073W11CD01402
SITE:
SITE AREA: **148,695 SF (3.41 AC.)**

ZONING:
RM2 - HIGH DENSITY MULTIFAMILY RESIDENTIAL ZONE
NEIGHBORHOOD ASSOCIATION: HIGHLAND

EXISTING BUILDING/CODES INFORMATION:

THIS PROJECT DOES NOT ADD NEW ENCLOSED AREA TO EXISTING BUILDINGS AND DOES NOT CHANGE OCCUPANCY OR EGRESS PATHS. THE PROJECT SCOPE ASSUMES CODE COMPLIANCE BY REPLACING LIKE FOR LIKE.

APPLICABLE CODES:
- 2010 OREGON STRUCTURAL SPECIALTY CODE (OSSC)
- ADA ACCESSIBILITY GUIDELINES (ADAAG)
- CITY OF SALEM REVISED CODE
- CITY OF SALEM DEVELOPMENT DESIGN HANDBOOK
- UNIFORM FEDERAL ACCESSIBILITY STANDARDS (UFAS)

BUILDING DATA (APARTMENTS):
- OCCUPANCY (EXISTING): R-2
- CONSTRUCTION TYPE (EXISTING): VA

BUILDING DATA (GARAGES):
- OCCUPANCY (EXISTING): S-2
- CONSTRUCTION TYPE (EXISTING): VB

DWELLING UNIT MATRIX:

TYPE	DESCRIPTION	AREA	QUANTITY
1	2 BED/1BATH	920*	30
2	3 BED/1 BATH	1,125	6
3	3 BED/2 BATH	1,220	10
		TOTAL	46

* UNIT AREA AT THIRD FLOOR = 938 SQ. FT.

BUILDING 03:
- 2 STORIES, 13,282 SQ. FT.
- EXISTING HEIGHT: 24 FEET
- 12 DWELLING UNITS
  - (8) TYPE A
  - (2) TYPE B
  - (2) TYPE C

BUILDING 04:
- 2 STORIES, 12,168 SQ. FT.
- EXISTING HEIGHT: 24 FEET
- 12 DWELLING UNITS
  - (8) TYPE A
  - (4) TYPE C

BUILDING 05:
- 3 STORIES, 13,608 SQ. FT.
- EXISTING HEIGHT: 33 FEET
- APPROVED NFPA 13R FIRE SPRINKLERS TO BE INCORPORATED UNDER THIS CONTRACT
- 14 DWELLING UNITS
  - (10) TYPE A
  - (4) TYPE B

BUILDING 06:
- 2 STORIES, 8,520 SQ. FT.
- EXISTING HEIGHT: 24 FEET
- 8 DWELLING UNITS
  - (4) TYPE A
  - (4) TYPE C

GARAGE BUILDINGS:
- 1 STORY, 1,349 SQ. FT.
- EXISTING HEIGHT: 12 FEET

REGISTERED ARCHITECT
BRIAN D. CARLETON
PORTLAND, OREGON
2918
STATE OF OREGON

CARLETON HART ARCHITECTURE
322 nw 8th avenue portland, oregon 97209
t 503 243 2252 | f 503 243 3261 | carletonhart.com

PARKWAY VILLAGE : EAST
APARTMENT REHABILITATION
SALEM HOUSING AUTHORITY

PERMIT REVIEW / BID SET

COVER SHEET

PROJ NO.
21348

01.21.14

A0.01

COPYRIGHT - CARLETON HART ARCHITECTURE DO NOT REPRODUCE WITHOUT PERMISSION

ABBREVIATIONS:

NOTE: NOT ALL ABBREVIATIONS MAY BE USED

AB	ANCHOR BOLT
ABM	AIR BARRIER MATERIAL
AC	AIR CONDITIONING
AD	AREA DRAIN
ADJ	ADJUSTABLE
AFF	ABOVE FINISH FLOOR
AHU	AIR HANDLING UNIT
ALT	ALTERNATE
AL	ALUMINUM
BD	BOARD
BLDG	BUILDING
BLKG	BLOCKING
BO	BOTTOM OF
CJ	CONTROL JOINT
CLG	CEILING
CLR	CLEAR
CMU	CONCRETE MASONRY UNIT
COL	COLUMN
CONC	CONCRETE
CONT	CONTINUOUS
CPT	CARPET
CTSK	COUNTERSINK
DBL	DOUBLE
DF	DRINKING FOUNTAIN
DIA	DIAMETER
DIM	DIMENSION
DN	DOWN
DS	DOWNSPOUT
DW	DISHWASHER
E	EAST
(E)	EXISTING
EA	EACH
EJ	EXPANSION JOINT
ELEC	ELECTRICAL
ELEV	ELEVATION
EQ	EQUAL
EQUIP	EQUIPMENT
ETC	ETCETERA
EW	EACH WAY
EXP	EXPANSION
EXT	EXTERIOR
FD	FLOOR DRAIN
FDN	FOUNDATION
FE	FIRE EXTINGUISHER
FEC	FIRE EXTINGUISHER CABINET
FIN	FINISH
FF	FINISH FLOOR
FH	FIRE HYDRANT
FLUOR	FLUORESCENT
FO	FACE OF
FT	FOOT OR FEET
FV	FIELD VERIFY
GA	GAUGE
GALV	GALVANIZED
GYP BD	GYPSUM BOARD
HB	HOSE BIBB
HT	HEIGHT
ID	INSIDE DIAMETER
IN	INCH OR INCHES
INSUL	INSULATION
JAN	JANITOR
JT	JOINT
LAV	LAVATORY
LT	LIGHT
MAM	MECHANICALLY ATTACHED MEMBRANE
MANF	MANUFACTURER
MAX	MAXIMUM
MECH	MECHANICAL
MH	MANHOLE
MIN	MINIMUM
MIR	MIRROR (REVERSE IMAGE)
MO	MASONRY OPENING
N	NORTH
(N)	NEW
NIC	NOT IN CONTRACT
NO	NUMBER
NTS	NOT TO SCALE
OC	ON CENTER
OD	OUTSIDE DIAMETER
OPP	OPPOSITE
PREFIN	PREFINISHED
PL	PROPERTY LINE
PLAM	PLASTIC LAMINATE
PR	PAIR
PT	PRESSURE TREATED
QT	QUARRY TILE
R	RADIUS
RD	ROOF DRAIN
REF	REFERENCE
RFR	REFRIGERATOR
REQ	REQUIRED
REV	REVISED
RM	ROOM
RO	ROUGH OPENING
S	SOUTH
SAM	SELF -ADHERING MEMBRANE
SH	SHELF
SHR	SHOWER
SIM	SIMILAR
SOG	SLAB ON GRADE
SQ	SQUARE
SS	STAINLESS STEEL
STD	STANDARD
STL	STEEL
T	TOP
T/G	TONGUE & GROOVE
TEMP	TEMPERATURE
TO	TOP OF
TP	TOILET PAPER DISPENSER
TS	TUBE STEEL
TYP	TYPICAL
UON	UNLESS OTHERWISE NOTED
VCT	VINYL COMPOSITION TILE
VERT	VERTICAL
VIF	VERIFY IN FIELD
W	WEST
WC	WATER CLOSET
W/D	WASHER & DRYER
WH	WATER HEATER
WRB	WEATHER RESISTIVE BARRIER
WT	WEIGHT
WWF	WELDED WIRE FABRIC

ARCHITECTURAL GRAPHIC SYMBOLS:

NOTE: NOT ALL SYMBOLS MAY BE USED

SYMBOL	DESCRIPTION
X / AX.X	DETAIL REFERENCE SYMBOL
X / AX.X	WALL SECTION REFERENCE SYMBOL
X / AX.X	EXTERIOR ELEVATION REFERENCE SYMBOL
A / D X AX.X B / C	INTERIOR ELEVATION REFERENCE SYMBOL
X	DOOR SYMBOL
X	WINDOW SYMBOL
1'-0"	DIMENSION LINE
X	KEYNOTE
XXX / 100'-0"	DATUM TAG
	DATUM TARGET
	REVISION TAG
XXX / XX	ROOM TAG
	LEADER - SPECIFIC OBJECT OR SYSTEM
	LEADER - GENERAL AREA

ARCHITECTURAL LINE SYMBOLS:

NOTE: NOT ALL LINES MAY BE USED

	BREAK LINE
	CENTER LINE
SECTOR - A / SECTOR - B	MATCH LINE
	ENLARGED DETAIL/OBJECT

ARCHITECTURAL TEXT SYMBOLS:

NOTE: NOT ALL SYMBOLS MAY BE USED

SYMBOL	DESCRIPTION
&	AND
@	AT
℄	CENTER LINE
X°	DEGREES
=	EQUALS
X'	FOOT, FEET
X"	INCH(ES)
x	MULTIPLY, BY
#	NUMBER, POUND
%	PERCENT
+	PLUS
+/- OR ±	PLUS OR MINUS
ℙ	PROPERTY LINE

ARCHITECTURAL MATERIAL SYMBOLS:

NOTE: NOT ALL MATERIALS MAY BE USED

SYMBOL	DESCRIPTION
	CONCRETE
	SOIL
	GRAVEL
	GENERAL AREA OR MATERIAL
	BATT INSULATION
	BLOWN-IN INSULATION
	FINISH LUMBER
	PLYWOOD
	EXISTING GYPSUM BOARD
	NEW GYPSUM BOARD
	FIBER CEMENT
	SEALANT

NOTES:

GENERAL PROJECT NOTES:

A. THESE NOTES ARE A SUPPLEMENT TO THE PROJECT SPECIFICATIONS. ANY DISCREPANCY FOUND AMONG THE DRAWINGS, SPECIFICATIONS, AND NOTES SHALL BE PROMPTLY REPORTED TO THE ARCHITECT IN WRITING ON SUCH FORM AS REQUIRED BY THE CONTRACT DOCUMENTS. ANY WORK DONE BY THE CONTRACTOR AFTER DISCOVERY OF SUCH DISCREPANCY SHALL BE DONE AT THE CONTRACTOR'S RISK.

B. THE WORK INCLUDES ALL LABOR, TOOLS, AND EQUIPMENT NECESSARY TO FURNISH AND INSTALL ALL MATERIALS AND EQUIPMENT SHOWN ON THE DRAWINGS AND DESCRIBED IN THE SPECIFICATIONS, TO PROVIDE COMPLETE AND OPERATING SYSTEMS.

C. EVEN THOUGH ALL INTRICATE, MINUTE DETAILS AND PARTS ARE NOT INDICATED ON DRAWINGS OR SPECIFICATIONS, ALL MATERIALS, EQUIPMENT, SYSTEMS AND ASSEMBLIES SHALL BE PROVIDED IN A COMPLETE, WHOLE AND PROPERLY FUNCTIONING MANNER IN ACCORDANCE WITH MANUFACTURER'S REQUIREMENTS. PROVIDE ALL DETAILED WORK REQUIRED TO COMPLETE ALL PORTIONS OF THE WORK.

D. THE DRAWINGS REPRESENT THE DESIGN INTENT AND ARE NOT INTENDED TO INDICATE THE MEANS AND METHOD OF CONSTRUCTION.

E. CORRELATION AND INTENT OF THE CONTRACT DOCUMENTS:

E.1. ANY REFERENCE STANDARDS (ASTM - AMERICAN SOCIETY FOR TESTING AND MATERIALS, ETC.), SHALL MEAN THE LATEST EDITION OF SUCH STANDARDS PUBLISHED ON, OR PRIOR TO THE DATE OF THESE CONTRACT DOCUMENTS. WHERE SUCH A REFERENCE IS MADE, THE APPLICABLE STANDARD IS HEREBY MADE A PART OF THE CONTRACT DOCUMENTS WHICH REFERS TO IT TO THE SAME EXTENT AS IF WRITTEN OUT IN THE CONTRACT DOCUMENTS IN FULL.

E.2. -WHENEVER A PRODUCT IS SPECIFIED IN ACCORDANCE WITH A FEDERAL SPECIFICATION, ASTM STANDARD, AMERICAN NATIONAL STANDARD INSTITUTE (ANSI), OR OTHER ASSOCIATION STANDARD, THE CONTRACTOR SHALL PRESENT AN AFFIDAVIT FROM THE MANUFACTURER WHEN REQUESTED BY THE ARCHITECT OR REQUIRED IN THE DRAWINGS OR SPECIFICATIONS, CERTIFYING THAT THE PRODUCT COMPLIES WITH THE PARTICULAR STANDARD OR SPECIFICATION. WHEN REQUESTED BY THE ARCHITECT OR SPECIFIED, SUPPORT TEST DATA SHALL BE SUBMITTED TO SUBSTANTIATE COMPLIANCE.

F. ALL FEATURES OF CONSTRUCTION NOT FULLY SHOWN SHALL BE THE SAME TYPE AND CHARACTER AS SHOWN FOR SIMILAR CONDITIONS SUBJECT TO REVIEW BY THE ARCHITECT.

G. THESE DOCUMENTS CONTAIN NOTES THAT MAY APPLY GENERALLY TO ALL DESIGN ELEMENTS, SPECIFICALLY TO ONE SHEET, OR SPECIFICALLY TO ONE OR MORE DESIGN ELEMENTS. ANY ALTERATION, MODIFICATION, DELETION, OR ADDITION TO THE NOTES BY WRITING, ACT OR FAILURE TO ACT, SHALL BE CARRIED OUT ONLY WITH THE PRIOR EXPRESS WRITTEN CONSENT AND APPROVAL OF THE ARCHITECT.

H. DRAWINGS AND DETAILS ARE MEANT TO INDICATE GENERAL DESIGN INTENT AND SHOW ASSEMBLIES OF STRUCTURAL AND NON-STRUCTURAL MEMBERS, SIZES, SHAPES, CONNECTIONS, ETC. COORDINATION WITH OTHER DRAWINGS, SPECIFICATIONS, NOTES, DIAGRAMS, ETC. SHALL BE NECESSARY FOR COMPLETE AND OPERATING SYSTEMS. ANY ITEMS NOT SHOWN, BUT NECESSARY FOR A COMPLETE AND FINISHED PRODUCT ARE TO BE CONSIDERED PART OF EACH DETAIL AND SHALL BE INCLUDED IN THE CONSTRUCTION TO MEET THE DESIGN INTENT AND INDUSTRY STANDARDS.

I. WHERE A GIVEN MATERIAL IS INDICATED IN DRAWINGS OR SPECIFICATIONS, IT SHALL BE PROVIDED THROUGHOUT THE LENGTH AND HEIGHT OF WALLS, PARTITIONS, PANELS, WINDOWS, ETCETERA, OR IN THE ASSEMBLY DETAIL IN WHICH IT OCCURS, FOR OTHER SIMILAR LOCATIONS THROUGHOUT THE FACILITY OR PROJECT, UNLESS ANOTHER MATERIAL IS INDICATED OR OTHERWISE NOTED.

J. ALL MANUFACTURED ARTICLES, MATERIALS, AND EQUIPMENT SHALL BE APPLIED, INSTALLED, CONNECTED, ERECTED, USED, CLEANED, PREPARED, AND CONDITIONED IN STRICT ACCORDANCE WITH THE MANUFACTURERS WRITTEN OR PRINTED DIRECTIONS AND INSTRUCTIONS, UNLESS SPECIFIED EXCEPTIONS OR OTHER REQUIREMENTS ARE INDICATED IN DRAWINGS OR SPECIFICATIONS.

K. DO NOT NOTCH OR DRILL JOISTS, BEAMS, OR LOAD BEARING STUDS WITHOUT THE PRIOR APPROVAL OF THE STRUCTURAL ENGINEER.

L. ALL DIMENSIONS ARE TO FACE OF STUD, UNLESS OTHERWISE NOTED.

M. USE DIMENSIONS SHOWN. IN NO CASE SHALL WORKING DIMENSIONS BE SCALED FROM THE DRAWINGS. IT IS THE RESPONSIBILITY OF THE CONTRACTOR TO CROSS CHECK THE DRAWINGS AND DIMENSIONS SHOWN WITH RELATED REQUIREMENTS IDENTIFIED ON OTHER TRADE DRAWINGS (CIVIL, LANDSCAPE, STRUCTURAL, MECHANICAL, ELECTRICAL, PLUMBING, AND OTHER DRAWINGS AS APPLICABLE). NOTIFY ARCHITECT OF ANY DISCREPANCIES IN WRITING PRIOR TO COMMENCEMENT OF THE WORK.

N. PROVIDE BLOCKING, BACKING, FRAMING WITHIN ALL WALLS HAVING WALL-MOUNTED FIXTURES, ACCESSORIES, FURNISHINGS AND EQUIPMENT.

O. ALL METAL FLASHING EDGES SHALL BE HEMMED, UNLESS NOTED OTHERWISE.

P. PROVIDE PHYSICAL BARRIER SEPARATION BETWEEN DISSIMILAR METALS. PHYSICAL BARRIER CAN BE IN THE FORM OF SHEET GOODS OR FLUID APPLIED MEMBRANES.

Q. CONTRACTOR SHALL PROTECT ALL EXPOSED WORK BEING INSTALLED IN WEATHER TIGHT MANNER.

R. PROVIDE TEMPORARY COVER AS NECESSARY TO PREVENT WATER INFILTRATION INTO THE BUILDING INTERIOR OR WIND DAMAGE DURING CONSTRUCTION.

S. ALL SEPARATING WALLS AND FLOOR-CEILING ASSEMBLIES, INCLUDING PENETRATIONS OR OPENINGS, SHALL PROVIDE AN AIRBORNE AND IMPACT SOUND INSULATION EQUAL TO SOUND TRANSMISSION CLASS (STC) AND IMPACT INSULATION CLASS (IIC) REQUIRED BY GOVERNING AUTHORITIES; CONTRACTOR SHALL PROVIDE CONSTRUCTION METHOD, ACCESSORIES, DEVICES AND APPURTENANCES AS REQUIRED FOR SAME. PROVIDE SEALANT AND/OR FIRE-STOPPING AT ALL OPENINGS MADE IN WALLS, FLOOR SURFACES AND FRAMING FOR SUPPLY AND DRAIN LINES; PROVIDE AIR TIGHT CONFIGURATION AROUND ELECTRICAL OUTLETS AND JUNCTION BOXES.

T. MAINTAIN SIDING MANUFACTURER'S MINIMUM REQUIRED HORIZONTAL AND VERTICAL CLEARANCES AT ALL STARTING POINTS AND TRANSITIONS.

U. REPLACEMENT OF ALL MATERIALS FOUND WITH MICROBIAL GROWTH, MOISTURE DAMAGE, OR DECAY WITHIN OR ADJACENT TO THE AREA OF WORK IS REQUIRED. POSSIBLE TYPES OF DAMAGE INCLUDE BUT ARE NOT LIMITED TO MATERIALS CALLED OUT WITH THE NOTE "PATCH AND REPAIR AS REQUIRED". A PROTOCOL MAY BE ESTABLISHED BY AN INDUSTRIAL HYGIENIST FOR THE IDENTIFICATION, REMOVAL AND TREATMENT OF MICROBIAL GROWTH.

V. ALL DETAIL CALLOUTS ARE TYPICAL AND ASSUMED TO BE IN MULTIPLE LOCATIONS THROUGHOUT THE FACILITY. PRIOR TO BID, ALL LOCATIONS AND QUANTITIES SHALL BE REVIEWED, VERIFIED, AND INCLUDED IN THE WORK.

W. STRUCTURAL, FIRE RESISTIVE AND SOUND RESISTIVE INTEGRITY IS TO BE MAINTAINED AT PENETRATIONS FOR ELECTRICAL, MECHANICAL, PLUMBING AND CONDUITS, PIPES AND SIMILAR SYSTEMS AND SHALL BE IN ACCORDANCE WITH THE REQUIREMENTS OF GOVERNING CODES AND AUTHORITIES HAVING JURISDICTION.

FIRE SPRINKLER & ALARM NOTES:

NOTE: PROVIDE FIRE SUPPRESSION IN ALL THREE STORY BUILDINGS ONLY.

A. DESIGN, FURNISH AND INSTALL COMPLETE BUILDING FIRE SPRINKLER SYSTEMS INCLUDING SYSTEM SIZING, ANTI-FREEZE SYSTEM, FIRESTOP PENETRATION SYSTEMS, FIRE DETECTION & ALARM ANNUNCIATION PANELS, CONNECTION TO TAMPER SWITCHES, LOW TEMPERATURE SWITCHES, FLOW DETECTORS, FDC APPURTENANCES, ETC.

B. PROVIDE SYSTEM DESIGN AND SIZING CALCULATIONS IN ACCORDANCE WITH THE REQUIREMENTS OF NFPA 13R, THE REQUIREMENTS OF THE LOCAL WATER DISTRICT, BUILDING DEPARTMENT AND THE LOCAL FIRE MARSHAL'S OFFICE HAVING AUTHORITY AND JURISDICTION FOR FIRE PROTECTION.

C. FURNISH AND SUBMIT TO ARCHITECT PRIOR TO SUBMISSION TO OWNER, BUILDING DEPARTMENT, AND FIRE MARSHAL SYSTEM DESIGN CALCULATIONS STAMPED BY A LICENSED FIRE PROTECTION ENGINEER REGISTERED IN THE STATE OF OREGON. THE FIRE PROTECTION ENGINEER SHALL BE RESPONSIBLE FOR OVERSEEING PREPARATION OF SHOP DRAWINGS, SYSTEM INSTALLATION, INSPECTIONS, SYSTEM TESTING AND PROVIDE OWNER WITH CORRECTED AS-BUILT RECORD DRAWINGS WITH LETTER OF FINAL ACCEPTANCE. SHOP DRAWINGS SHALL INCLUDE SYSTEM PLANS, DETAILS & SCHEMATICS INCLUDING IDENTIFICATION OF ALL APPURTENANCES.

D. PROVIDE A SYSTEM OPERATIONS AND MAINTENANCE MANUAL INCLUDING LISTS OF SYSTEM COMPONENTS, MANUFACTURERS USE & MAINTENANCE INSTRUCTIONS OF COMPONENTS AND WARRANTY DOCUMENTATION.

E. SUBMITTAL ITEMS SHALL NOT BE INSTALLED UNTIL THE DESIGN AND SUBMITTAL DOCUMENTS HAVE BEEN REVIEWED BY THE ARCHITECT AND APPROVED BY THE LOCAL BUILDING DEPARTMENT AND FIRE MARSHAL'S OFFICE HAVING AUTHORITY AND JURISDICTION FOR FIRE PROTECTION.

REGISTERED ARCHITECT
BRIAN D. CARLETON
PORTLAND, OREGON
2918
STATE OF OREGON

CARLETON HART ARCHITECTURE
322 nw 8th avenue portland, oregon 97209
t 503 243 2252 | f 503 243 3261 | carletonhart.com

PARKWAY VILLAGE : EAST
APARTMENT REHABILITATION
SALEM HOUSING AUTHORITY

PERMIT REVIEW / BID SET

GENERAL INFORMATION

PROJ NO.
21348

01.21.14

COPYRIGHT - CARLETON HART ARCHITECTURE DO NOT REPRODUCE WITHOUT PERMISSION

A0.02

1 SITE PLAN OVERALL - REFERENCE ONLY
SCALE: 1" = 40'-0"

REGISTERED ARCHITECT
BRIAN D. CARLETON
PORTLAND, OREGON
2918
STATE OF OREGON

CARLETON HART ARCHITECTURE
322 nw 8th avenue portland, oregon 97209
t 503 243 2252 | f 503 243 3261 | carletonhart.com

PARKWAY VILLAGE : EAST
APARTMENT REHABILITATION
SALEM HOUSING AUTHORITY

PERMIT REVIEW / BID SET

SITE PLAN OVERALL

PROJ NO.
21348

01.21.14

A1.01

COPYRIGHT - CARLETON HART ARCHITECTURE DO NOT REPRODUCE WITHOUT PERMISSION

1 SITE PLAN - EAST - REFERENCE ONLY
SCALE: 1" = 30'-0"

N

BUILDING MATRIX

BUILDING 1 - 3113/ 3115	
UNIT #	111, 112, 113, 114, 211, 212, 213, 214
BUILDING 2 - 3103/ 3105	
UNIT #	101, 102, 103, 104, 201, 202, 203, 204
BUILDING 3 - 3147/ 3149/ 3151	
UNIT #	135, 136, 137, 138, 139, 140, 235, 236, 237, 238, 239, 240
BUILDING 4 - 3163/ 3165/ 3167	
UNIT #	147, 148, 149, 150, 151, 152, 247, 248, 249, 250, 251, 252
BUILDING 5 - 3163/ 3165/ 3167	
UNIT #	141, 142, 143, 144, 145, 146, 241, 242, 243, 244, 245, 246, 343, 344
BUILDING 6 - 3137/ 3139	
UNIT #	131, 132, 133, 134, 231, 232, 233, 234
BUILDING 7 - 3131/ 3133/ 3135	
UNIT #	125, 126, 127, 128, 129, 130, 225, 226, 227, 228, 229, 230, 325, 326, 327, 328, 329, 330
BUILDING 8 - 3107/ 3109/ 3111	
UNIT #	105, 106, 107, 108, 109, 110, 205, 206, 207, 208, 209, 210, 325, 306, 307, 308, 309, 310
BUILDING 9 - 3125/ 3127/ 3129	
UNIT #	119, 120, 121, 122, 123, 124, 219, 220, 221, 222, 223, 224, 319, 320, 321, 322, 323, 324
BUILDING 10 - 3121/ 3123	
UNIT #	115, 116, 117, 118, 215, 216, 217, 218
GARAGE 01 - 3117	
GARAGE 02 - 3119	
GARAGE 03 - 3159	
GARAGE 04 - 3161	
GARAGE 05 - 3141	

GENERAL SITE PLAN NOTES

A. SITE WORK DESCRIBED UNDER SEPARATE PACKAGE. SITE INFORMATION PROVIDED IS FOR REFERENCE ONLY.

SITE PLAN LEGEND

- PROPERTY LINE
- 10' SETBACK
- PARKING AREA
- EXISTING BUILDING
- NEW SIDEWALKS
- EXISTING CONCRETE TO REMAIN
- NEW STRIPED ADA PARKING AISLE
- C — COMPACT PARKING STALL
- NEW CONCRETE WHEEL STOP
- EXISTING TREE
- ACCESSIBLE UNIT - SEE FLOOR PLANS
- S&H — SIGHT AND HEARING ACCESSIBLE UNIT - SEE FLOOR PLANS

SITE PLAN LEGEND

1. FIRE RISER ROOM ADDITION
2. EXTENDED GARAGE FOR ACCESSIBLE PARKING

REGISTERED ARCHITECT
BRIAN D. CARLETON
PORTLAND, OREGON
2918
STATE OF OREGON

CARLETON HART ARCHITECTURE
322 nw 8th avenue portland, oregon 97209
t 503 243 2252 | f 503 243 3261 | carletonhart.com

PARKWAY VILLAGE : EAST
APARTMENT REHABILITATION
SALEM HOUSING AUTHORITY

PERMIT REVIEW / BID SET

SITE PLAN
EAST

PROJ NO.
21348

01.21.14

A1.03

COPYRIGHT - CARLETON HART ARCHITECTURE DO NOT REPRODUCE WITHOUT PERMISSION

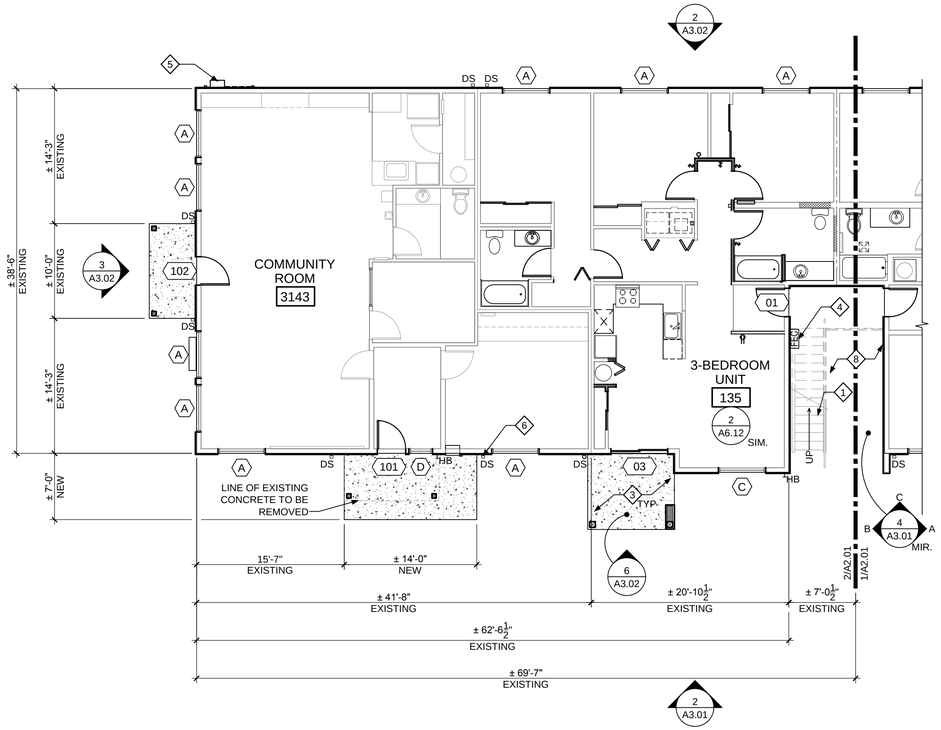

2 BUILDING 03 - FIRST FLOOR PLAN

SCALE: 1/8" = 1'-0"

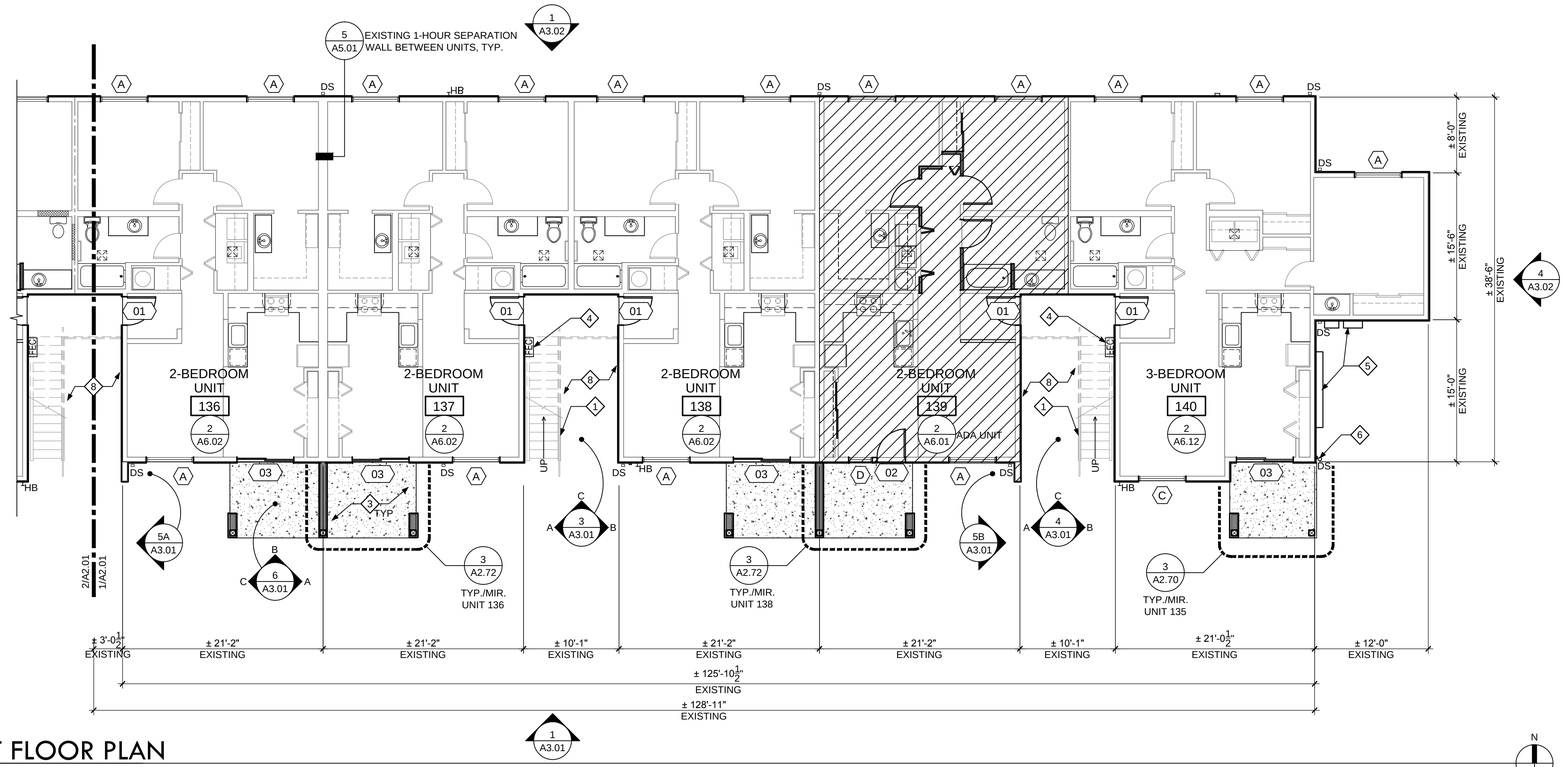

1 BUILDING 03 - FIRST FLOOR PLAN

SCALE: 1/8" = 1'-0"

GENERAL PLAN NOTES

A. ANY OBSERVED, KNOWN, OR VERIFIED CONDITION(S) THAT ARE MATERIAL TO THE PERFORMANCE OF THE WORK DESCRIBED BY THE CONTRACT DOCUMENTS OR OTHERWISE REQUIRE INTERPRETATION SHALL BE PROMPTLY REPORTED TO THE ARCHITECT IN WRITING ON SUCH FORM AS REQUIRED BY THE CONTRACT DOCUMENTS.

B. REFER TO ENLARGED PLANS FOR DETAILED SCOPE OF INTERIOR WORK.

C. PRIMARY INTERIOR SCOPE OF WORK IS LIMITED TO GROUND FLOOR UNITS. SECOND AND THIRD FLOOR INTERIOR WORK CONSISTS PRIMARILY OF PATCHING/ PAINTING AS REQUIRED FOR NEW DUCT WORK, WINDOW REPLACEMENT, NEW FIRE SPRINKLERS (3-STORY BUILDINGS), ETC.

D. REFER TO EXTERIOR FINISH SCHEDULES FOR FINISH MATERIALS, COLORS, AND TEXTURES.

E. EXISTING DIMENSIONS SHOWN ARE FOR REFERENCE ONLY AND MUST BE VERIFIED IN FIELD.

F. ALL BUILDINGS ARE TO RECEIVE NEW GUTTERS AND DOWNSPOUTS. INSTALL DOWNSPOUTS IN SAME LOCATIONS AS EXISTING, UNLESS NOTED OTHERWISE.

G. ALL UNITS TO RECEIVE CARBON MONOXIDE DETECTORS.

FLOOR PLAN LEGEND

- CONCRETE SLAB-ON-GRADE
- ELEVATED FRAMED DECK WITH PRECAST CONCRETE DECKING
- ACCESSIBLE UNIT
- DS — APPROXIMATE DOWNSPOUT LOCATION
- HB — APPROXIMATE EXISTING HOSE BIB LOCATION - INSTALL NEW FROST FREE HOSE BIB

FLOOR PLAN KEY NOTES

1. EXISTING STAIR ASSEMBLY TO REMAIN
2. NEW DECK AND GUARDRAIL ASSEMBLY - REFER TO ENLARGED DECK PLAN SHEETS
3. NEW SLAB-ON-GRADE CONCRETE PATIO
4. EXISTING FIRE EXTINGUISHER AND CABINET. REMOVE, CLEAN, PROTECT AND REINSTALL.
5. EXISTING BUILDING POWER, VOICE,DATA AND CABLE TV. APPURTENANCES TO BE INTEGRATED INTO BUILDING ENCLOSURE.
6. RAIN DRAIN BOOT AND DOWNSPOUT TO BE RELOCATED
7. CRAWL SPACE VENT FAN
8. EXISTING CONCRETE TO REMAIN
9. 20"x30" ATTIC ACCESS HATCH ABOVE. SEE DETAIL 5/A5.18

KEY PLAN - N.T.S.

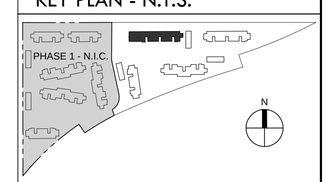

REGISTERED ARCHITECT
BRIAN D. CARLETON
PORTLAND, OREGON
2918
STATE OF OREGON

CARLETON HART ARCHITECTURE
322 nw 8th avenue portland, oregon 97209
t 503 243 2252 | f 503 243 3261 | carletonhart.com

PARKWAY VILLAGE : EAST
APARTMENT REHABILITATION
SALEM HOUSING AUTHORITY

PERMIT REVIEW / BID SET

FIRST FLOOR PLAN
BUILDING 03

PROJ NO.
21348

01.21.14

COPYRIGHT - CARLETON HART ARCHITECTURE DO NOT REPRODUCE WITHOUT PERMISSION

A2.01

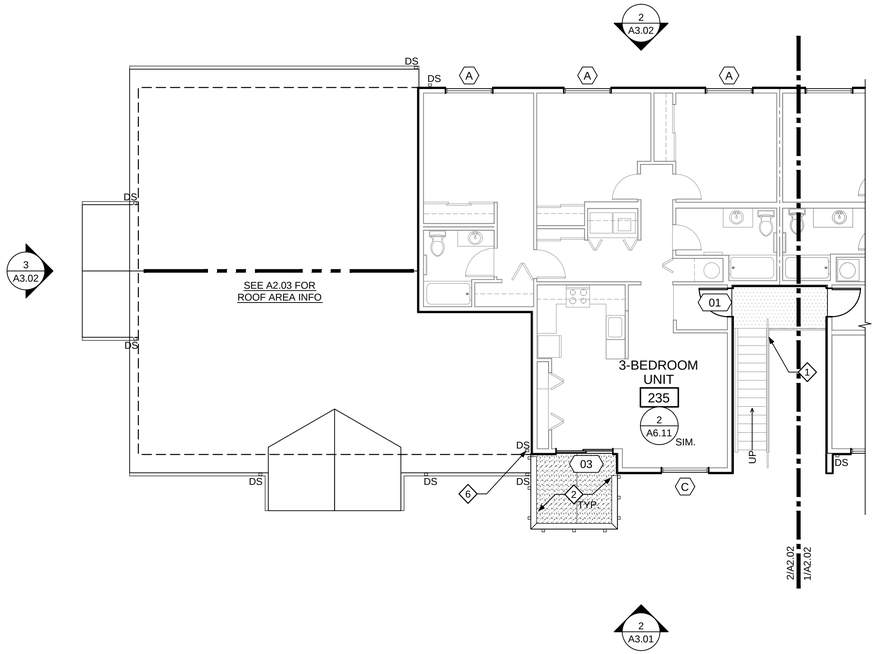

2 BUILDING 03 - SECOND FLOOR PLAN

SCALE: 1/8" = 1'-0"

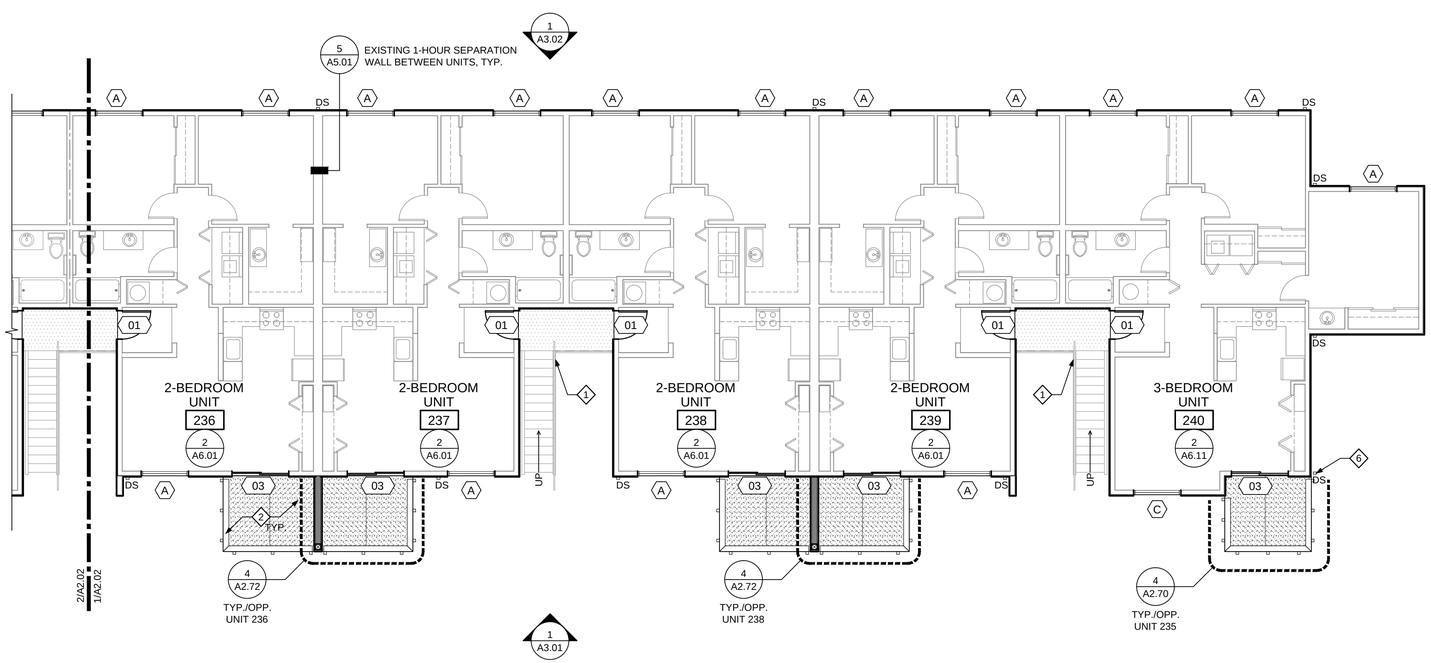

1 BUILDING 03 - SECOND FLOOR PLAN

SCALE: 1/8" = 1'-0"

GENERAL PLAN NOTES

A. ANY OBSERVED, KNOWN, OR VERIFIED CONDITION(S) THAT ARE MATERIAL TO THE PERFORMANCE OF THE WORK DESCRIBED BY THE CONTRACT DOCUMENTS OR OTHERWISE REQUIRE INTERPRETATION SHALL BE PROMPTLY REPORTED TO THE ARCHITECT IN WRITING ON SUCH FORM AS REQUIRED BY THE CONTRACT DOCUMENTS.

B. REFER TO ENLARGED PLANS FOR DETAILED SCOPE OF INTERIOR WORK.

C. PRIMARY INTERIOR SCOPE OF WORK IS LIMITED TO GROUND FLOOR UNITS. SECOND AND THIRD FLOOR INTERIOR WORK CONSISTS PRIMARILY OF PATCHING/ PAINTING AS REQUIRED FOR NEW DUCT WORK, WINDOW REPLACEMENT, NEW FIRE SPRINKLERS (3-STORY BUILDINGS), ETC.

D. REFER TO EXTERIOR FINISH SCHEDULES FOR FINISH MATERIALS, COLORS, AND TEXTURES.

E. EXISTING DIMENSIONS SHOWN ARE FOR REFERENCE ONLY AND MUST BE VERIFIED IN FIELD.

F. ALL BUILDINGS ARE TO RECEIVE NEW GUTTERS AND DOWNSPOUTS. INSTALL DOWNSPOUTS IN SAME LOCATIONS AS EXISTING, UNLESS NOTED OTHERWISE.

G. ALL UNITS TO RECEIVE CARBON MONOXIDE DETECTORS.

FLOOR PLAN LEGEND

CONCRETE SLAB-ON-GRADE

ELEVATED FRAMED DECK WITH PRECAST CONCRETE DECKING

ACCESSIBLE UNIT

DS — APPROXIMATE DOWNSPOUT LOCATION

HB — APPROXIMATE EXISTING HOSE BIB LOCATION - INSTALL NEW FROST FREE HOSE BIB

FLOOR PLAN KEY NOTES

1. EXISTING STAIR ASSEMBLY TO REMAIN
2. NEW DECK AND GUARDRAIL ASSEMBLY - REFER TO ENLARGED DECK PLAN SHEETS
3. NEW SLAB-ON-GRADE CONCRETE PATIO
4. EXISTING FIRE EXTINGUISHER AND CABINET. REMOVE, CLEAN, PROTECT AND REINSTALL.
5. EXISTING BUILDING POWER, VOICE,DATA AND CABLE TV. APPURTENANCES TO BE INTEGRATED INTO BUILDING ENCLOSURE.
6. RAIN DRAIN BOOT AND DOWNSPOUT TO BE RELOCATED
7. CRAWL SPACE VENT FAN
8. EXISTING CONCRETE TO REMAIN
9. 20"x30" ATTIC ACCESS HATCH ABOVE. SEE DETAIL 5/A5.18

KEY PLAN - N.T.S.

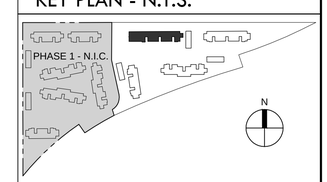

REGISTERED ARCHITECT
BRIAN D. CARLETON
PORTLAND, OREGON
2918
STATE OF OREGON

CARLETON HART ARCHITECTURE
322 nw 8th avenue portland, oregon 97209
t 503 243 2252 | f 503 243 3261 | carletonhart.com

PARKWAY VILLAGE : EAST
APARTMENT REHABILITATION
SALEM HOUSING AUTHORITY

PERMIT REVIEW / BID SET

SECOND FLOOR PLAN
BUILDING 03

PROJ NO.
21348

01.21.14

COPYRIGHT - CARLETON HART ARCHITECTURE DO NOT REPRODUCE WITHOUT PERMISSION

A2.02

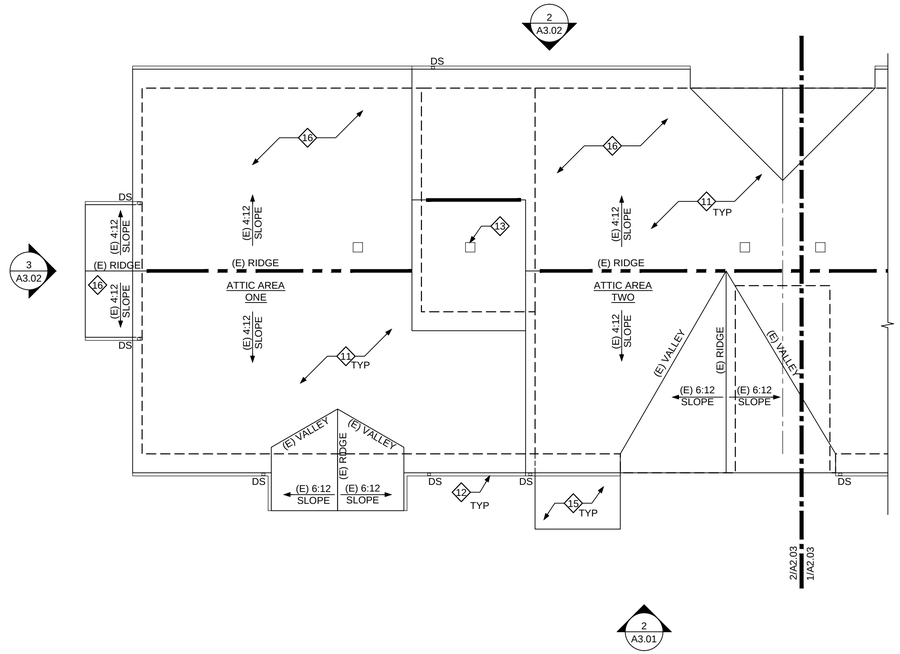

2 BUILDING 03 - ROOF PLAN

SCALE: 1/8" = 1'-0"

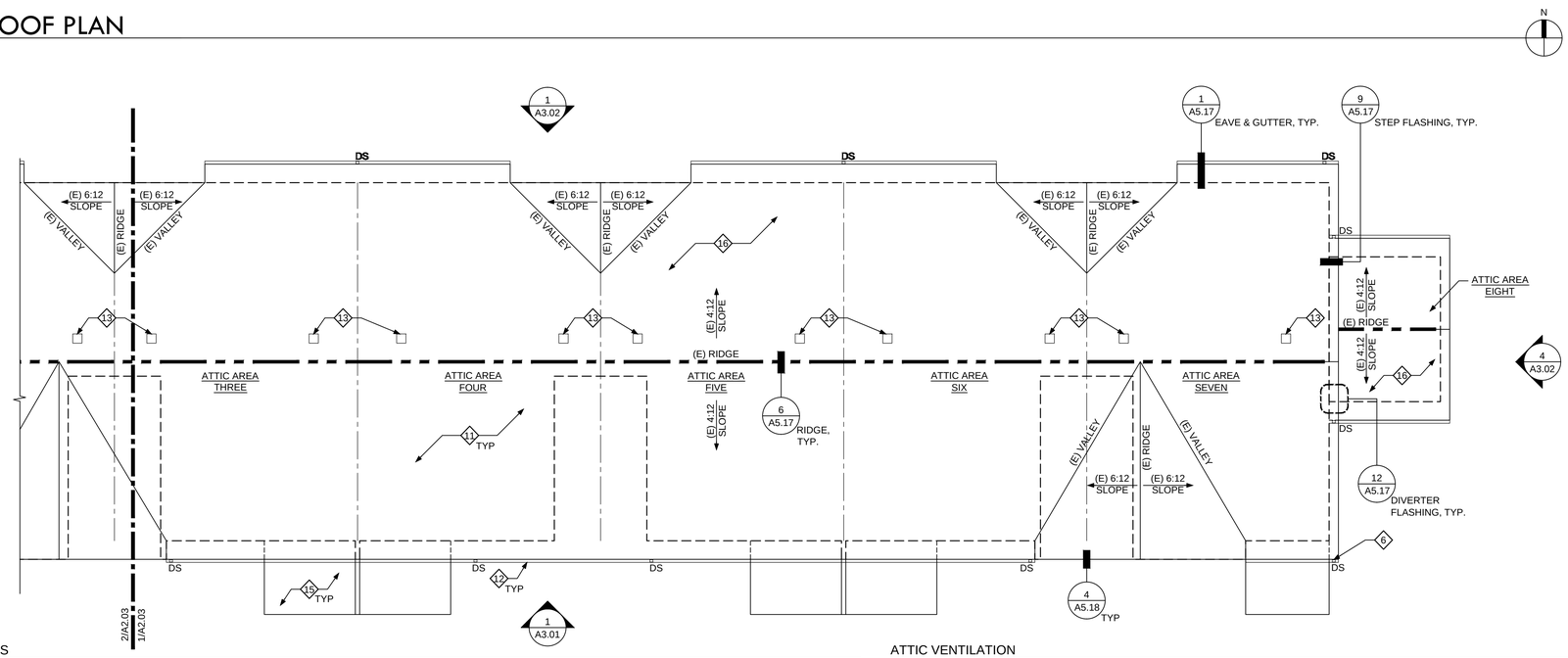

1 BUILDING 03 - ROOF PLAN

SCALE: 1/8" = 1'-0"

ATTIC VENTILATION CALCULATIONS

	ATTIC AREA - ONE		ATTIC AREA - TWO		ATTIC AREA - THREE		ATTIC AREA - FOUR		ATTIC AREA - FIVE		ATTIC AREA - SIX		ATTIC AREA - SEVEN		ATTIC AREA - EIGHT	
	AREA	LENGTH	AREA	LENGTH	AREA	LENGTH	AREA	LENGTH	AREA	LENGTH	AREA	LENGTH	AREA	LENGTH	AREA	LENGTH
AREA	189,910 SQ IN		186,074 SQ IN		145,692 SQ IN		145,692 SQ IN		145,692 SQ IN		145,692 SQ IN		145,286 SQ IN		26,964 SQ IN	
REQUIRED VENTING	633 SQ IN		621 SQ IN		486 SQ IN		486 SQ IN		486 SQ IN		486 SQ IN		485 SQ IN		90 SQ IN	
RIDGE VENT	490 SQ IN	28'-0"	623 SQ IN	35'-6"	455 SQ IN	26'-0"	455 SQ IN	26'-0"	455 SQ IN	26'-0"	455 SQ IN	26'-0"	455 SQ IN	26'-0"	183 SQ IN	10'-6"
EAVE VENT	156.6 SQ IN	27'-0"	139.2 SQ IN	24'-0"	104.4 SQ IN	18'-0"	104.4 SQ IN	18'-0"	104.4 SQ IN	18'-0"	104.4 SQ IN	18'-0"	69.6 SQ IN	12'-0"	69.6 SQ IN	12'-0"
TOTAL PROVIDED	**646.6 SQ IN**		**762.2 SQ IN**		**559.4 SQ IN**		**559.4 SQ IN**		**559.4 SQ IN**		**559.4 SQ IN**		**524.6 SQ IN**		**252.6 SQ IN**	

ATTIC VENTILATION

ATTIC VENTILATION CALCULATIONS BASED UPON THE OSSC - SECTION 1203.2 ATTIC SPACES:

1. THE NET FREE VENTILATED AREA SHALL NOT BE LESS THAN 1/300 OF THE AREA OF THE SPACE VENTILATED.
2. EACH ATTIC AREA SEPARATED BY FIRE WALLS, PARTITION WALLS, SOUND BARRIERS, OR OTHER SIMILAR OBSTRUCTION SHALL BE VENTILATED INDIVIDUALLY AND COMPLY WITH THE VENTILATION REQUIREMENTS FOR THAT SPACE.
3. ROOF VENTILATION IS ACHIEVED THROUGH A COMBINATION OF CONTINUOUS RIDGE VENTS, EAVE VENTS AND LOW PROFILE CAP VENTS.
   - 3.1. RIDGE VENT_____, 17.5 SQ. IN. / 1'-0" (LINEAR FOOT)
   - 3.2. EAVE VENT_____, 5.8 SQ. IN. / 1'-0" (LINEAR FOOT)
   - 3.3. LOW PROFILE CAP VENT__ 40 SQ. IN. (10 SQ. IN. / 1'-0")
4. NO OPENING INTO ATTICS GREATER THAN ¾" IS PERMITTED.

GENERAL PLAN NOTES

A. ANY OBSERVED, KNOWN, OR VERIFIED CONDITION(S) THAT ARE MATERIAL TO THE PERFORMANCE OF THE WORK DESCRIBED BY THE CONTRACT DOCUMENTS OR OTHERWISE REQUIRE INTERPRETATION SHALL BE PROMPTLY REPORTED TO THE ARCHITECT IN WRITING ON SUCH FORM AS REQUIRED BY THE CONTRACT DOCUMENTS.

B. REFER TO ENLARGED PLANS FOR DETAILED SCOPE OF INTERIOR WORK.

C. PRIMARY INTERIOR SCOPE OF WORK IS LIMITED TO GROUND FLOOR UNITS. SECOND AND THIRD FLOOR INTERIOR WORK CONSISTS PRIMARILY OF PATCHING/ PAINTING AS REQUIRED FOR NEW DUCT WORK, WINDOW REPLACEMENT, NEW FIRE SPRINKLERS (3-STORY BUILDINGS), ETC.

D. REFER TO EXTERIOR FINISH SCHEDULES FOR FINISH MATERIALS, COLORS, AND TEXTURES.

E. EXISTING DIMENSIONS SHOWN ARE FOR REFERENCE ONLY AND MUST BE VERIFIED IN FIELD.

F. ALL BUILDINGS ARE TO RECEIVE NEW GUTTERS AND DOWNSPOUTS. INSTALL DOWNSPOUTS IN SAME LOCATIONS AS EXISTING, UNLESS NOTED OTHERWISE.

G. ALL UNITS TO RECEIVE CARBON MONOXIDE DETECTORS.

KEY PLAN - N.T.S.

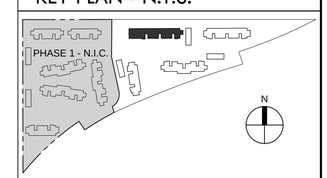

ROOF PLAN LEGEND

- DASHED LINE INDICATES ITEM BELOW
- DS — GUTTER AND APPROXIMATE LOCATION OF DOWNSPOUT
- RIDGE VENT
- APPROXIMATE LOCATION OF ATTIC DRAFT STOP

ROOF PLAN KEY NOTES

11. ROOFING ASSEMBLY - REMOVE EXISTING AND PROVIDE NEW ROOFING AND UNDERLAYMENT
12. NEW METAL GUTTER
13. MECHANICAL EXHAUST PENETRATION - SEAL AND INSULATE ALL DUCTS
14. LOW PROFILE CAP VENT
15. NEW DECK ASSEMBLY BELOW
16. NOT ALL ROOF PENETRATIONS SHOWN. CONTRACTOR TO VERIFY EXISTING MECHANICAL AND PLUMBING VENTS AND TERMINATE ABOVE FINISHED ROOFING WITH APPROVED CAP VENT DUCT TERMINATION OR PIPE VENT FLASHING - TYP.

REGISTERED ARCHITECT
BRIAN D. CARLETON
PORTLAND, OREGON
2918
STATE OF OREGON

CARLETON HART ARCHITECTURE
322 nw 8th avenue portland, oregon 97209
t 503 243 2252 | f 503 243 3261 | carletonhart.com

PARKWAY VILLAGE : EAST
APARTMENT REHABILITATION
SALEM HOUSING AUTHORITY

PERMIT REVIEW / BID SET

ROOF PLAN
BUILDING 03

PROJ NO.
21348

01.21.14

COPYRIGHT - CARLETON HART ARCHITECTURE DO NOT REPRODUCE WITHOUT PERMISSION

A2.03

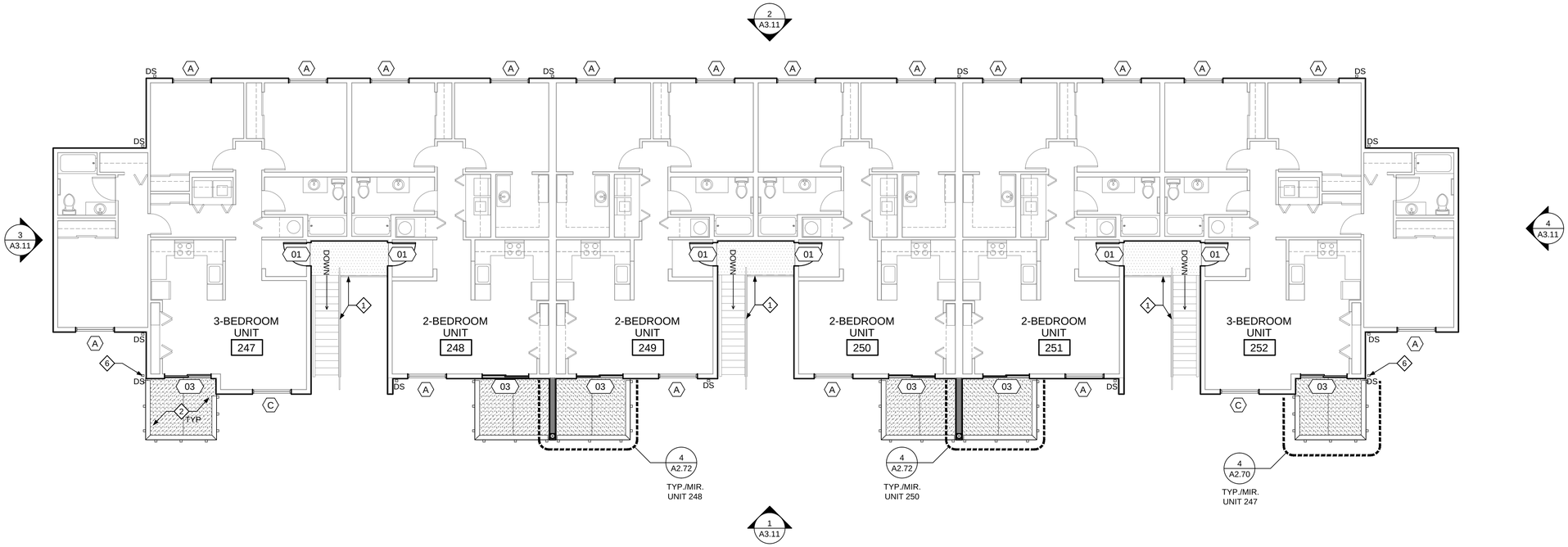

2 BUILDING 04 - SECOND FLOOR PLAN

SCALE: 1/8" = 1'-0"

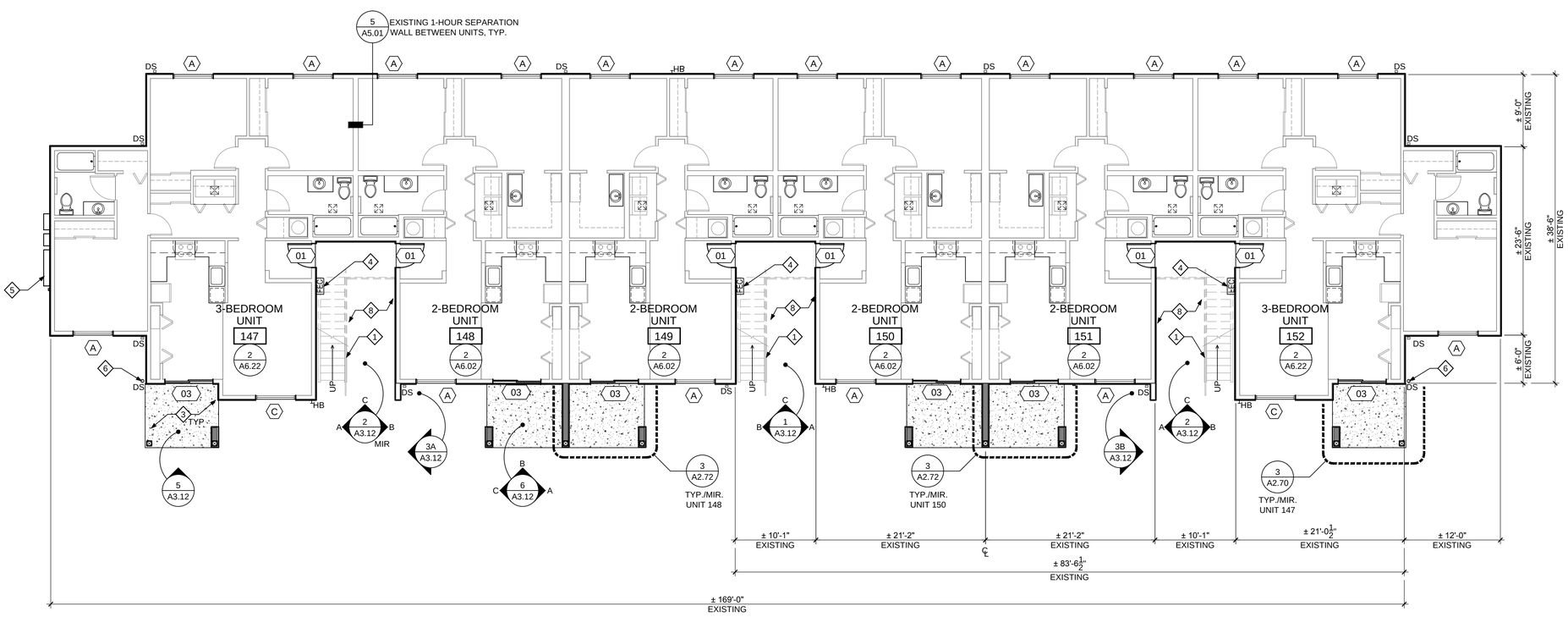

1 BUILDING 04 - FIRST FLOOR PLAN

SCALE: 1/8" = 1'-0"

GENERAL PLAN NOTES

A. ANY OBSERVED, KNOWN, OR VERIFIED CONDITION(S) THAT ARE MATERIAL TO THE PERFORMANCE OF THE WORK DESCRIBED BY THE CONTRACT DOCUMENTS OR OTHERWISE REQUIRE INTERPRETATION SHALL BE PROMPTLY REPORTED TO THE ARCHITECT IN WRITING ON SUCH FORM AS REQUIRED BY THE CONTRACT DOCUMENTS.

B. REFER TO ENLARGED PLANS FOR DETAILED SCOPE OF INTERIOR WORK.

C. PRIMARY INTERIOR SCOPE OF WORK IS LIMITED TO GROUND FLOOR UNITS. SECOND AND THIRD FLOOR INTERIOR WORK CONSISTS PRIMARILY OF PATCHING/ PAINTING AS REQUIRED FOR NEW DUCT WORK, WINDOW REPLACEMENT, NEW FIRE SPRINKLERS (3-STORY BUILDINGS), ETC.

D. REFER TO EXTERIOR FINISH SCHEDULES FOR FINISH MATERIALS, COLORS, AND TEXTURES.

E. EXISTING DIMENSIONS SHOWN ARE FOR REFERENCE ONLY AND MUST BE VERIFIED IN FIELD.

F. ALL BUILDINGS ARE TO RECEIVE NEW GUTTERS AND DOWNSPOUTS. INSTALL DOWNSPOUTS IN SAME LOCATIONS AS EXISTING, UNLESS NOTED OTHERWISE.

G. ALL UNITS TO RECEIVE CARBON MONOXIDE DETECTORS.

FLOOR PLAN LEGEND

- CONCRETE SLAB-ON-GRADE
- ELEVATED FRAMED DECK WITH PRECAST CONCRETE DECKING
- ACCESSIBLE UNIT
- DS — APPROXIMATE DOWNSPOUT LOCATION
- HB — APPROXIMATE EXISTING HOSE BIB LOCATION - INSTALL NEW FROST FREE HOSE BIB

FLOOR PLAN KEY NOTES

1. EXISTING STAIR ASSEMBLY TO REMAIN
2. NEW DECK AND GUARDRAIL ASSEMBLY - REFER TO ENLARGED DECK PLAN SHEETS
3. NEW SLAB-ON-GRADE CONCRETE PATIO
4. EXISTING FIRE EXTINGUISHER AND CABINET. REMOVE, CLEAN, PROTECT AND REINSTALL.
5. EXISTING BUILDING POWER, VOICE,DATA AND CABLE TV. APPURTENANCES TO BE INTEGRATED INTO BUILDING ENCLOSURE.
6. RAIN DRAIN BOOT AND DOWNSPOUT TO BE RELOCATED
7. CRAWL SPACE VENT FAN
8. EXISTING CONCRETE TO REMAIN
9. 20"x30" ATTIC ACCESS HATCH ABOVE. SEE DETAIL 5/A5.18

KEY PLAN - N.T.S.

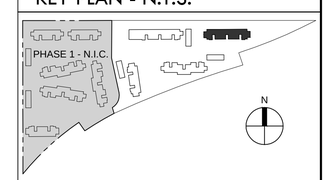

REGISTERED ARCHITECT
BRIAN D. CARLETON
PORTLAND, OREGON
2918
STATE OF OREGON

CARLETON HART ARCHITECTURE
322 nw 8th avenue portland, oregon 97209
t 503 243 2252 | f 503 243 3261 | carletonhart.com

PARKWAY VILLAGE : EAST
APARTMENT REHABILITATION
SALEM HOUSING AUTHORITY

PERMIT REVIEW / BID SET

FLOOR PLANS
BUILDING 04

PROJ NO.
21348

01.21.14

COPYRIGHT - CARLETON HART ARCHITECTURE DO NOT REPRODUCE WITHOUT PERMISSION

A2.11

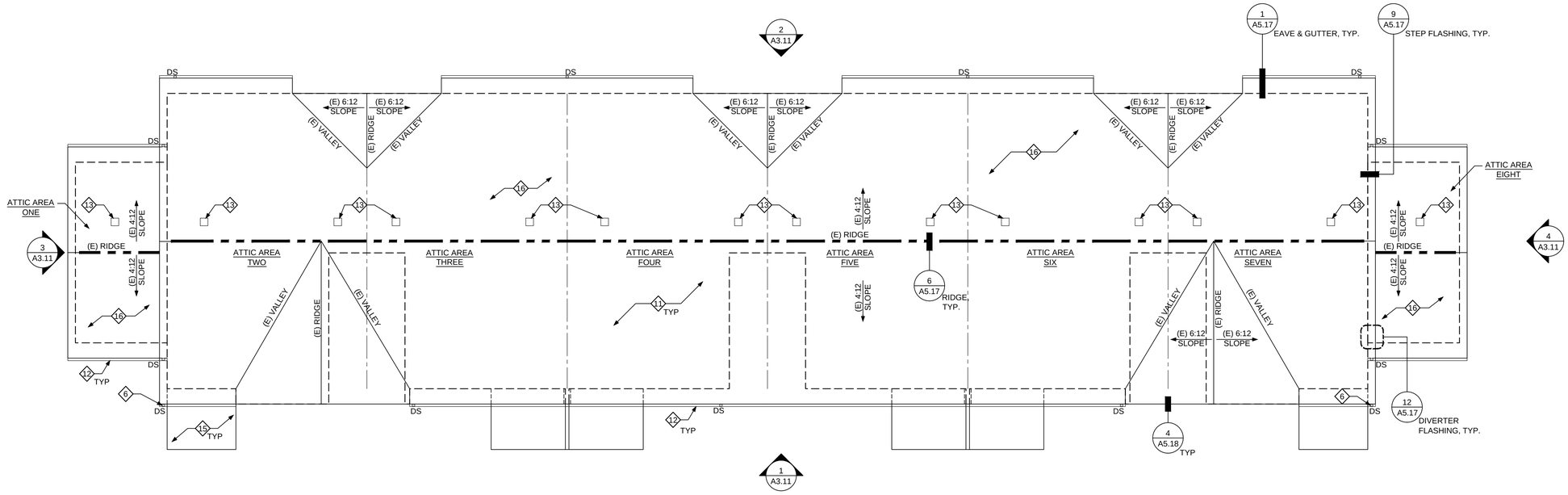

ATTIC VENTILATION CALCULATIONS

	ATTIC AREA - ONE		ATTIC AREA - TWO		ATTIC AREA - THREE		ATTIC AREA - FOUR		ATTIC AREA - FIVE		ATTIC AREA - SIX		ATTIC AREA - SEVEN		ATTIC AREA - EIGHT	
	AREA	LENGTH	AREA	LENGTH	AREA	LENGTH	AREA	LENGTH	AREA	LENGTH	AREA	LENGTH	AREA	LENGTH	AREA	LENGTH
AREA	40,788 SQ IN		145,286 SQ IN		145,692 SQ IN		145,692 SQ IN		145,692 SQ IN		145,692 SQ IN		145,286 SQ IN		40,788 SQ IN	
REQUIRED VENTING	136 SQ IN		485 SQ IN		486 SQ IN		486 SQ IN		486 SQ IN		486 SQ IN		485 SQ IN		136 SQ IN	
RIDGE VENT	183 SQ IN	10'-6"	455 SQ IN	26'-0"	455 SQ IN	26'-0"	455 SQ IN	26'-0"	455 SQ IN	26'-0"	455 SQ IN	26'-0"	455 SQ IN	26'-0"	183 SQ IN	10'-6"
EAVE VENT	69.6 SQ IN	12'-0"	69.6 SQ IN	12'-0"	104.4 SQ IN	18'-0"	104.4 SQ IN	18'-0"	104.4 SQ IN	18'-0"	104.4 SQ IN	18'-0"	69.6 SQ IN	12'-0"	69.6 SQ IN	12'-0"
TOTAL PROVIDED	**252.6 SQ IN**		**524.6 SQ IN**		**559.4 SQ IN**		**559.4 SQ IN**		**559.4 SQ IN**		**559.4 SQ IN**		**524.6 SQ IN**		**252.6 SQ IN**	

ATTIC VENTILATION

ATTIC VENTILATION CALCULATIONS BASED UPON THE OSSC - SECTION 1203.2 ATTIC SPACES:

1. THE NET FREE VENTILATED AREA SHALL NOT BE LESS THAN 1/300 OF THE AREA OF THE SPACE VENTILATED.
2. EACH ATTIC AREA SEPARATED BY FIRE WALLS, PARTITION WALLS, SOUND BARRIERS, OR OTHER SIMILAR OBSTRUCTION SHALL BE VENTILATED INDIVIDUALLY AND COMPLY WITH THE VENTILATION REQUIREMENTS FOR THAT SPACE.
3. ROOF VENTILATION IS ACHIEVED THROUGH A COMBINATION OF CONTINUOUS RIDGE VENTS, EAVE VENTS AND LOW PROFILE CAP VENTS.
   - 3.1. RIDGE VENT_____, 17.5 SQ. IN. / 1'-0" (LINEAR FOOT)
   - 3.2. EAVE VENT_____, 5.8 SQ. IN. / 1'-0" (LINEAR FOOT)
4. NO OPENING INTO ATTICS GREATER THAN ¼" IS PERMITTED.

1 BUILDING 04 - ROOF PLAN

SCALE: 1/8" = 1'-0"

N

GENERAL PLAN NOTES

A. ANY OBSERVED, KNOWN, OR VERIFIED CONDITION(S) THAT ARE MATERIAL TO THE PERFORMANCE OF THE WORK DESCRIBED BY THE CONTRACT DOCUMENTS OR OTHERWISE REQUIRE INTERPRETATION SHALL BE PROMPTLY REPORTED TO THE ARCHITECT IN WRITING ON SUCH FORM AS REQUIRED BY THE CONTRACT DOCUMENTS.

B. REFER TO ENLARGED PLANS FOR DETAILED SCOPE OF INTERIOR WORK.

C. PRIMARY INTERIOR SCOPE OF WORK IS LIMITED TO GROUND FLOOR UNITS. SECOND AND THIRD FLOOR INTERIOR WORK CONSISTS PRIMARILY OF PATCHING/ PAINTING AS REQUIRED FOR NEW DUCT WORK, WINDOW REPLACEMENT, NEW FIRE SPRINKLERS (3-STORY BUILDINGS), ETC.

D. REFER TO EXTERIOR FINISH SCHEDULES FOR FINISH MATERIALS, COLORS, AND TEXTURES.

E. EXISTING DIMENSIONS SHOWN ARE FOR REFERENCE ONLY AND MUST BE VERIFIED IN FIELD.

F. ALL BUILDINGS ARE TO RECEIVE NEW GUTTERS AND DOWNSPOUTS. INSTALL DOWNSPOUTS IN SAME LOCATIONS AS EXISTING, UNLESS NOTED OTHERWISE.

G. ALL UNITS TO RECEIVE CARBON MONOXIDE DETECTORS.

KEY PLAN - N.T.S.

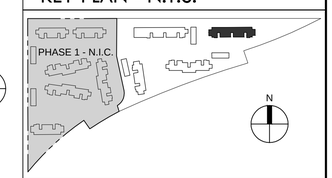

ROOF PLAN LEGEND

- DASHED LINE INDICATES ITEM BELOW
- DS — GUTTER AND APPROXIMATE LOCATION OF DOWNSPOUT
- RIDGE VENT
- APPROXIMATE LOCATION OF ATTIC DRAFT STOP

ROOF PLAN KEY NOTES

- 11 ROOFING ASSEMBLY - REMOVE EXISTING AND PROVIDE NEW ROOFING AND UNDERLAYMENT
- 12 NEW METAL GUTTER
- 13 MECHANICAL EXHAUST PENETRATION - SEAL AND INSULATE ALL DUCTS
- 14 LOW PROFILE CAP VENT
- 15 NEW DECK ASSEMBLY BELOW
- 16 NOT ALL ROOF PENETRATIONS SHOWN. CONTRACTOR TO VERIFY EXISTING MECHANICAL AND PLUMBING VENTS AND TERMINATE ABOVE FINISHED ROOFING WITH APPROVED CAP VENT DUCT TERMINATION OR PIPE VENT FLASHING - TYP.

REGISTERED ARCHITECT
BRIAN D. CARLETON
PORTLAND, OREGON
2918
STATE OF OREGON

CARLETON HART ARCHITECTURE
322 nw 8th avenue portland, oregon 97209
t 503 243 2252 | f 503 243 3261 | carletonhart.com

PARKWAY VILLAGE : EAST
APARTMENT REHABILITATION
SALEM HOUSING AUTHORITY

PERMIT REVIEW / BID SET

ROOF PLAN
BUILDING 04

PROJ NO.
21348

01.21.14

COPYRIGHT - CARLETON HART ARCHITECTURE DO NOT REPRODUCE WITHOUT PERMISSION

A2.12

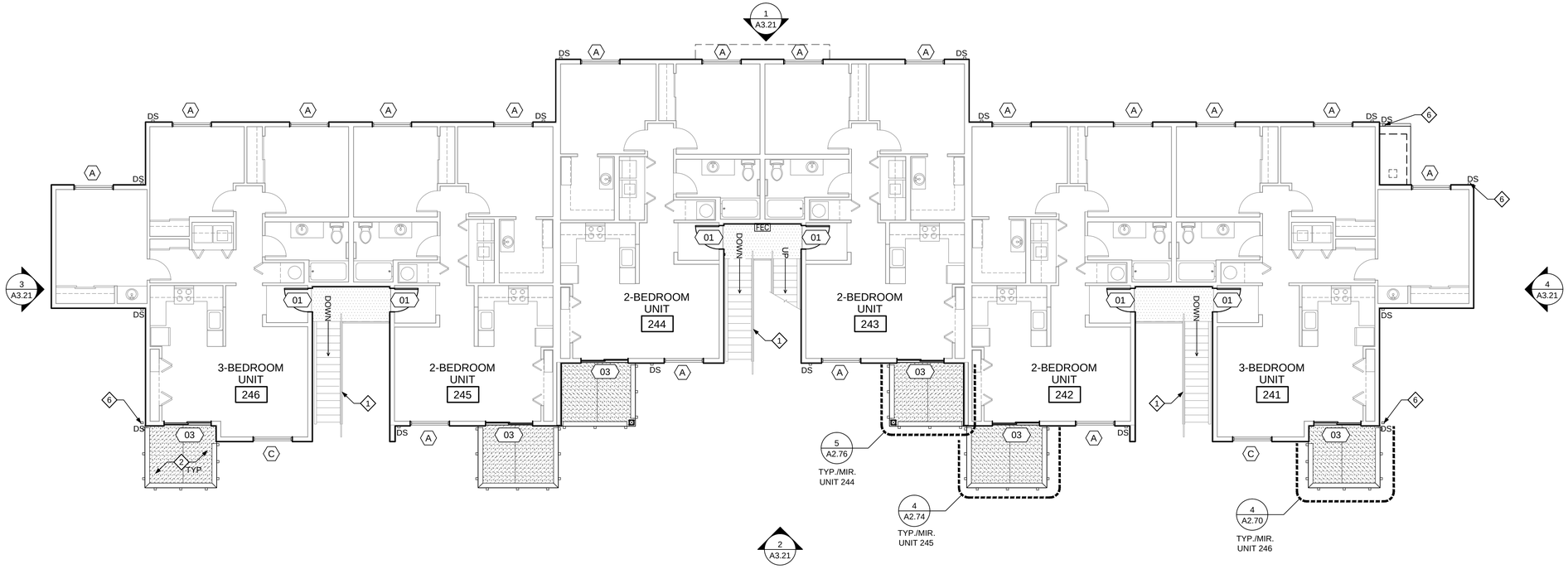

2 BUILDING 05 - SECOND FLOOR PLAN

SCALE: 1/8" = 1'-0"

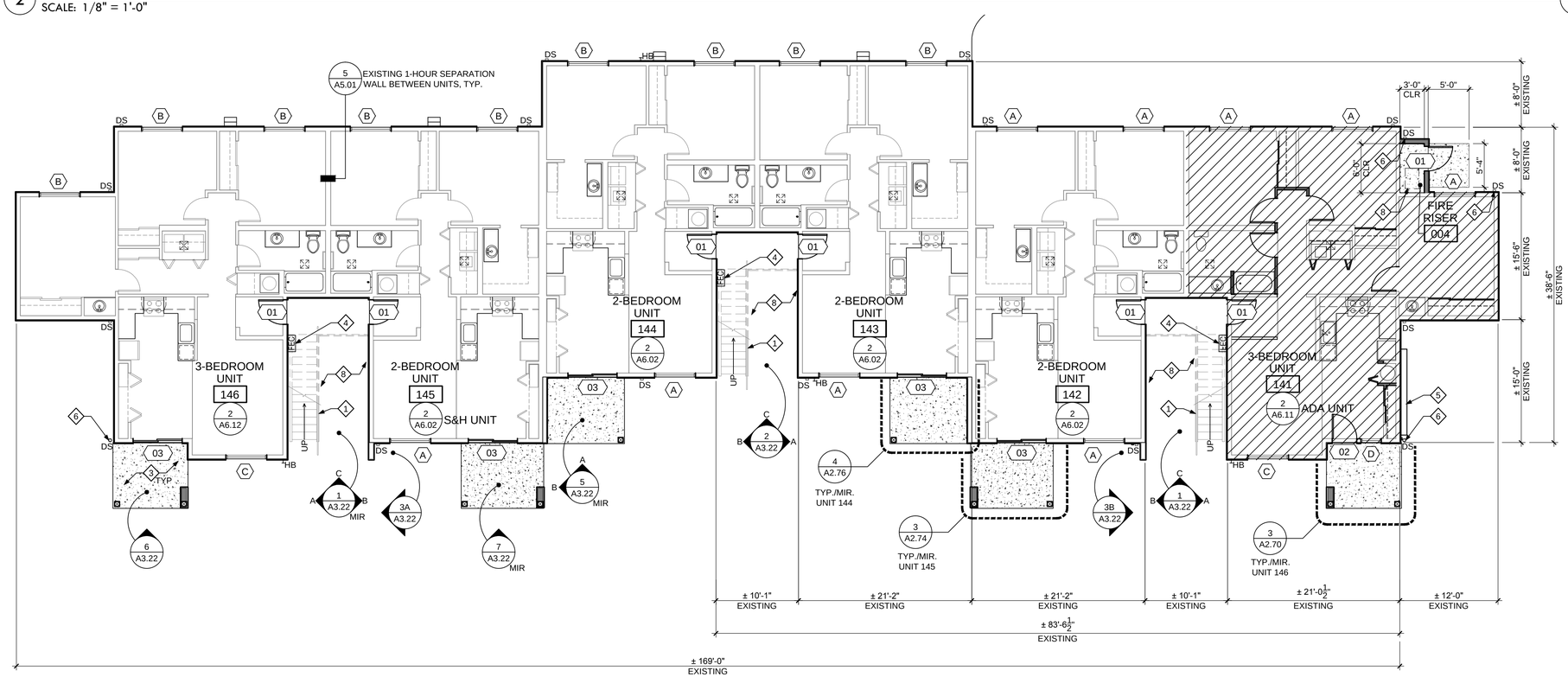

1 BUILDING 05 - FIRST FLOOR PLAN

SCALE: 1/8" = 1'-0"

GENERAL PLAN NOTES

A. ANY OBSERVED, KNOWN, OR VERIFIED CONDITION(S) THAT ARE MATERIAL TO THE PERFORMANCE OF THE WORK DESCRIBED BY THE CONTRACT DOCUMENTS OR OTHERWISE REQUIRE INTERPRETATION SHALL BE PROMPTLY REPORTED TO THE ARCHITECT IN WRITING ON SUCH FORM AS REQUIRED BY THE CONTRACT DOCUMENTS.

B. REFER TO ENLARGED PLANS FOR DETAILED SCOPE OF INTERIOR WORK.

C. PRIMARY INTERIOR SCOPE OF WORK IS LIMITED TO GROUND FLOOR UNITS. SECOND AND THIRD FLOOR INTERIOR WORK CONSISTS PRIMARILY OF PATCHING/ PAINTING AS REQUIRED FOR NEW DUCT WORK, WINDOW REPLACEMENT, NEW FIRE SPRINKLERS (3-STORY BUILDINGS), ETC.

D. REFER TO EXTERIOR FINISH SCHEDULES FOR FINISH MATERIALS, COLORS, AND TEXTURES.

E. EXISTING DIMENSIONS SHOWN ARE FOR REFERENCE ONLY AND MUST BE VERIFIED IN FIELD.

F. ALL BUILDINGS ARE TO RECEIVE NEW GUTTERS AND DOWNSPOUTS. INSTALL DOWNSPOUTS IN SAME LOCATIONS AS EXISTING, UNLESS NOTED OTHERWISE.

G. ALL UNITS TO RECEIVE CARBON MONOXIDE DETECTORS.

FLOOR PLAN LEGEND

- CONCRETE SLAB-ON-GRADE
- ELEVATED FRAMED DECK WITH PRECAST CONCRETE DECKING
- ACCESSIBLE UNIT
- DS — APPROXIMATE DOWNSPOUT LOCATION
- HB — APPROXIMATE EXISTING HOSE BIB LOCATION - INSTALL NEW FROST FREE HOSE BIB

FLOOR PLAN KEY NOTES

1. EXISTING STAIR ASSEMBLY TO REMAIN
2. NEW DECK AND GUARDRAIL ASSEMBLY - REFER TO ENLARGED DECK PLAN SHEETS
3. NEW SLAB-ON-GRADE CONCRETE PATIO
4. EXISTING FIRE EXTINGUISHER AND CABINET. REMOVE, CLEAN, PROTECT AND REINSTALL.
5. EXISTING BUILDING POWER, VOICE,DATA AND CABLE TV. APPURTENANCES TO BE INTEGRATED INTO BUILDING ENCLOSURE.
6. RAIN DRAIN BOOT AND DOWNSPOUT TO BE RELOCATED
7. CRAWL SPACE VENT FAN
8. EXISTING CONCRETE TO REMAIN
9. 20"x30" ATTIC ACCESS HATCH ABOVE. SEE DETAIL 5/A5.18

KEY PLAN - N.T.S.

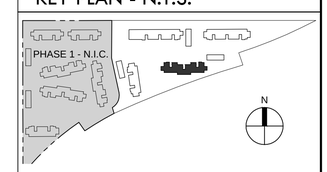

REGISTERED ARCHITECT
BRIAN D. CARLETON
PORTLAND, OREGON
2918
STATE OF OREGON

CARLETON HART ARCHITECTURE
322 nw 8th avenue portland, oregon 97209
t 503 243 2252 | f 503 243 3261 | carletonhart.com

PARKWAY VILLAGE : EAST
APARTMENT REHABILITATION
SALEM HOUSING AUTHORITY

PERMIT REVIEW / BID SET

FLOOR PLANS
BUILDING 05

PROJ NO.
21348

01.21.14

COPYRIGHT - CARLETON HART ARCHITECTURE DO NOT REPRODUCE WITHOUT PERMISSION

A2.21

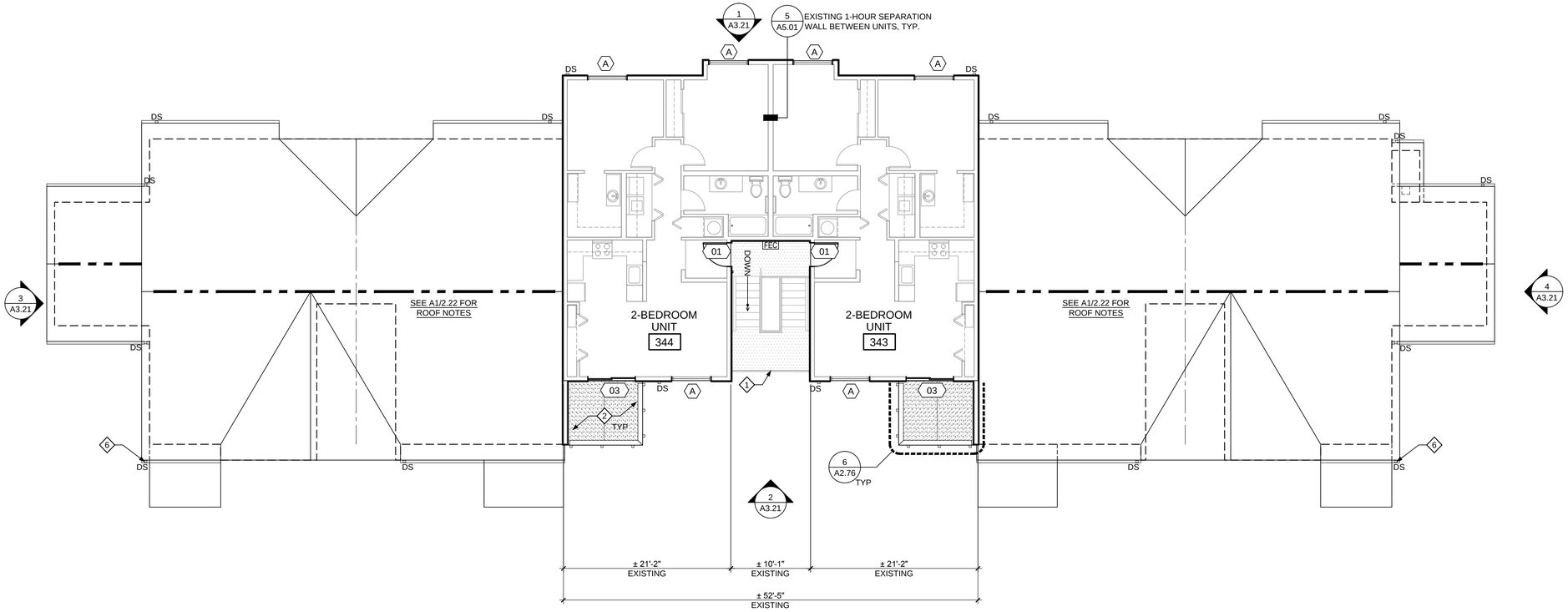

2 BUILDING 05 - THIRD FLOOR PLAN

SCALE: 1/8" = 1'-0"

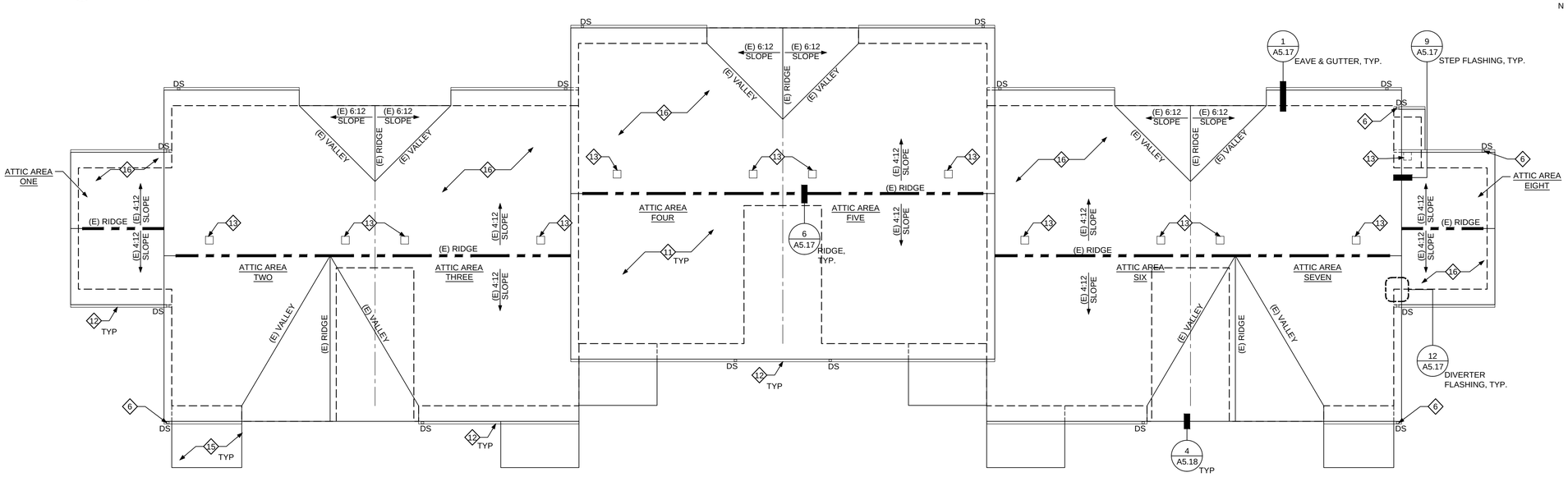

1 BUILDING 05 - ROOF PLAN

SCALE: 1/8" = 1'-0"

ATTIC VENTILATION CALCULATIONS

	ATTIC AREA - ONE		ATTIC AREA - TWO		ATTIC AREA - THREE		ATTIC AREA - FOUR		ATTIC AREA - FIVE		ATTIC AREA - SIX		ATTIC AREA - SEVEN		ATTIC AREA - EIGHT	
	AREA	LENGTH	AREA	LENGTH	AREA	LENGTH	AREA	LENGTH	AREA	LENGTH	AREA	LENGTH	AREA	LENGTH	AREA	LENGTH
AREA	26,964 SQ IN		145,286 SQ IN		145,692 SQ IN		145,981 SQ IN		145,981 SQ IN		145,692 SQ IN		145,286 SQ IN		26,964 SQ IN	
REQUIRED VENTING	90 SQ IN		485 SQ IN		486 SQ IN		487 SQ IN		487 SQ IN		486 SQ IN		485 SQ IN		90 SQ IN	
RIDGE VENT	183 SQ IN	10'-6"	447 SQ IN	25'-6"	455 SQ IN	26'-0"	450 SQ IN	25'-9"	450 SQ IN	25'-9"	455 SQ IN	26'-0"	447 SQ IN	25'-6"	183 SQ IN	10'-6"
EAVE VENT	69.6 SQ IN	12'-0"	69.6 SQ IN	12'-0"	104.4 SQ IN	18'-0"	104.4 SQ IN	18'-0"	104.4 SQ IN	18'-0"	104.4 SQ IN	18'-0"	69.6 SQ IN	12'-0"	69.6 SQ IN	12'-0"
TOTAL PROVIDED	**252.6 SQ IN**		**516.6 SQ IN**		**559.4 SQ IN**		**554.4 SQ IN**		**554.4 SQ IN**		**559.4 SQ IN**		**516.6 SQ IN**		**252.6 SQ IN**	

ATTIC VENTILATION

ATTIC VENTILATION CALCULATIONS BASED UPON THE OSSC - SECTION 1203.2 ATTIC SPACES:

1. THE NET FREE VENTILATED AREA SHALL NOT BE LESS THAN 1/300 OF THE AREA OF THE SPACE VENTILATED.
2. EACH ATTIC AREA SEPARATED BY FIRE WALLS, PARTITION WALLS, SOUND BARRIERS, OR OTHER SIMILAR OBSTRUCTION SHALL BE VENTILATED INDIVIDUALLY AND COMPLY WITH THE VENTILATION REQUIREMENTS FOR THAT SPACE.
3. ROOF VENTILATION IS ACHIEVED THROUGH A COMBINATION OF CONTINUOUS RIDGE VENTS, EAVE VENTS AND LOW PROFILE CAP VENTS.
   - 3.1. RIDGE VENT_____ 17.5 SQ. IN. / 1'-0" (LINEAR FOOT)
   - 3.2. EAVE VENT_____ 5.8 SQ. IN. / 1'-0" (LINEAR FOOT)
4. NO OPENING INTO ATTICS GREATER THAN ¼" IS PERMITTED.

GENERAL PLAN NOTES

A. ANY OBSERVED, KNOWN, OR VERIFIED CONDITION(S) THAT ARE MATERIAL TO THE PERFORMANCE OF THE WORK DESCRIBED BY THE CONTRACT DOCUMENTS OR OTHERWISE REQUIRE INTERPRETATION SHALL BE PROMPTLY REPORTED TO THE ARCHITECT IN WRITING ON SUCH FORM AS REQUIRED BY THE CONTRACT DOCUMENTS.

B. REFER TO ENLARGED PLANS FOR DETAILED SCOPE OF INTERIOR WORK.

C. PRIMARY INTERIOR SCOPE OF WORK IS LIMITED TO GROUND FLOOR UNITS. SECOND AND THIRD FLOOR INTERIOR WORK CONSISTS PRIMARILY OF PATCHING/ PAINTING AS REQUIRED FOR NEW DUCT WORK, WINDOW REPLACEMENT, NEW FIRE SPRINKLERS (3-STORY BUILDINGS), ETC.

D. REFER TO EXTERIOR FINISH SCHEDULES FOR FINISH MATERIALS, COLORS, AND TEXTURES.

E. EXISTING DIMENSIONS SHOWN ARE FOR REFERENCE ONLY AND MUST BE VERIFIED IN FIELD.

F. ALL BUILDINGS ARE TO RECEIVE NEW GUTTERS AND DOWNSPOUTS. INSTALL DOWNSPOUTS IN SAME LOCATIONS AS EXISTING, UNLESS NOTED OTHERWISE.

G. ALL UNITS TO RECEIVE CARBON MONOXIDE DETECTORS.

FLOOR PLAN LEGEND

- CONCRETE SLAB-ON-GRADE
- ELEVATED FRAMED DECK WITH PRECAST CONCRETE DECKING
- ACCESSIBLE UNIT
- DS — APPROXIMATE DOWNSPOUT LOCATION
- HB — APPROXIMATE EXISTING HOSE BIB LOCATION - INSTALL NEW FROST FREE HOSE BIB

FLOOR PLAN KEY NOTES

1. EXISTING STAIR ASSEMBLY TO REMAIN
2. NEW DECK AND GUARDRAIL ASSEMBLY - REFER TO ENLARGED DECK PLAN SHEETS
3. NEW SLAB-ON-GRADE CONCRETE PATIO
4. EXISTING FIRE EXTINGUISHER AND CABINET. REMOVE, CLEAN, PROTECT AND REINSTALL.
5. EXISTING BUILDING POWER, VOICE,DATA AND CABLE TV. APPURTENANCES TO BE INTEGRATED INTO BUILDING ENCLOSURE.
6. RAIN DRAIN BOOT AND DOWNSPOUT TO BE RELOCATED
7. CRAWL SPACE VENT FAN
8. EXISTING CONCRETE TO REMAIN
9. 20"x30" ATTIC ACCESS HATCH ABOVE. SEE DETAIL 5/A5.18

KEY PLAN - N.T.S.

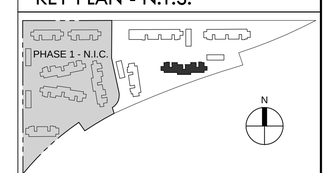

ROOF PLAN LEGEND

- DASHED LINE INDICATES ITEM BELOW
- DS — GUTTER AND APPROXIMATE LOCATION OF DOWNSPOUT
- RIDGE VENT
- APPROXIMATE LOCATION OF ATTIC DRAFT STOP

ROOF PLAN KEY NOTES

11. ROOFING ASSEMBLY - REMOVE EXISTING AND PROVIDE NEW ROOFING AND UNDERLAYMENT
12. NEW METAL GUTTER
13. MECHANICAL EXHAUST PENETRATION - SEAL AND INSULATE ALL DUCTS
14. LOW PROFILE CAP VENT
15. NEW DECK ASSEMBLY BELOW
16. NOT ALL ROOF PENETRATIONS SHOWN. CONTRACTOR TO VERIFY EXISTING MECHANICAL AND PLUMBING VENTS AND TERMINATE ABOVE FINISHED ROOFING WITH APPROVED CAP VENT DUCT TERMINATION OR PIPE VENT FLASHING - TYP.

REGISTERED ARCHITECT
BRIAN D. CARLETON
PORTLAND, OREGON
2918
STATE OF OREGON

CARLETON HART ARCHITECTURE
322 nw 8th avenue portland, oregon 97209
t 503 243 2252 | f 503 243 3261 | carletonhart.com

PARKWAY VILLAGE : EAST
APARTMENT REHABILITATION
SALEM HOUSING AUTHORITY

PERMIT REVIEW / BID SET

FLOOR & ROOF PLANS
BUILDING 04

PROJ NO.
21348

01.21.14

A2.22

COPYRIGHT - CARLETON HART ARCHITECTURE DO NOT REPRODUCE WITHOUT PERMISSION

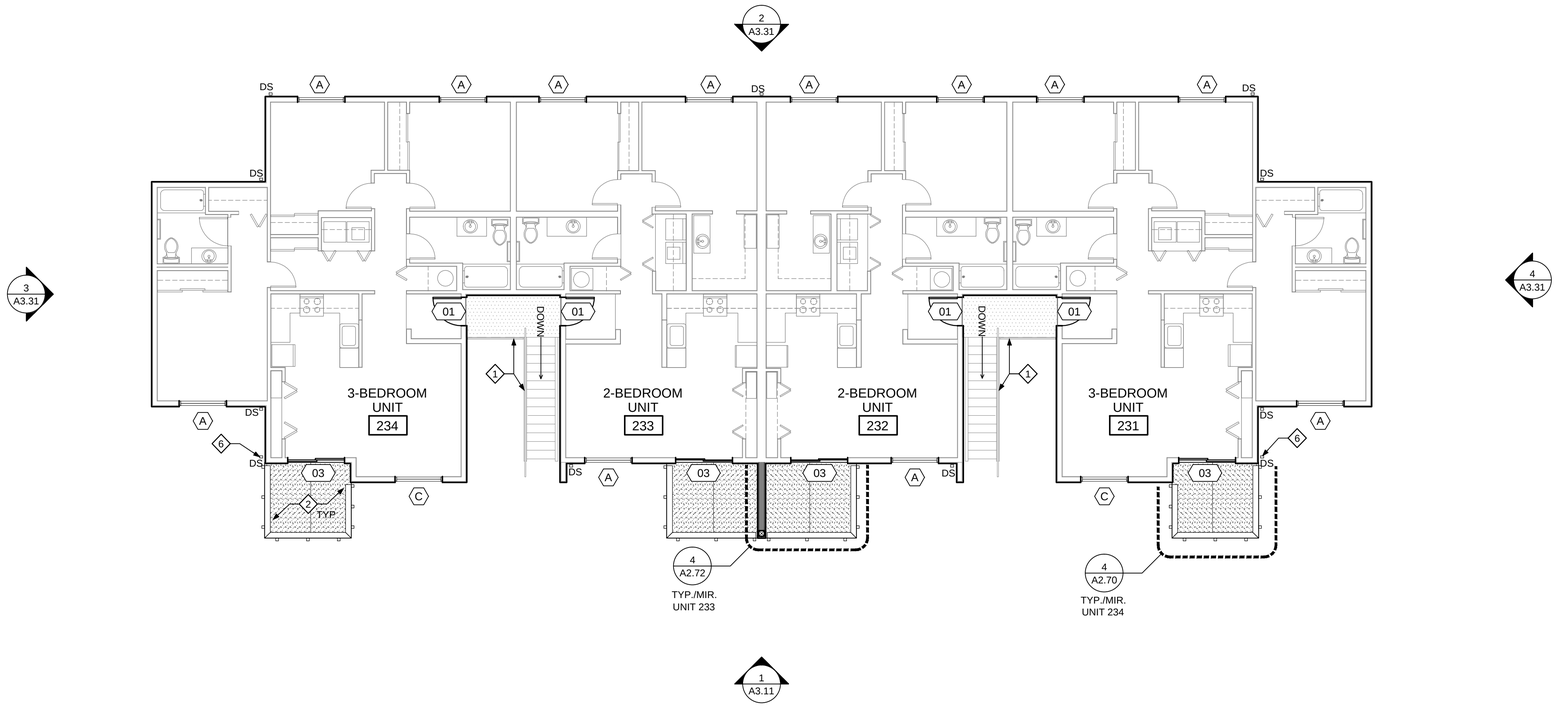

2 BUILDING 06 - SECOND FLOOR PLAN

SCALE: 1/8" = 1'-0"

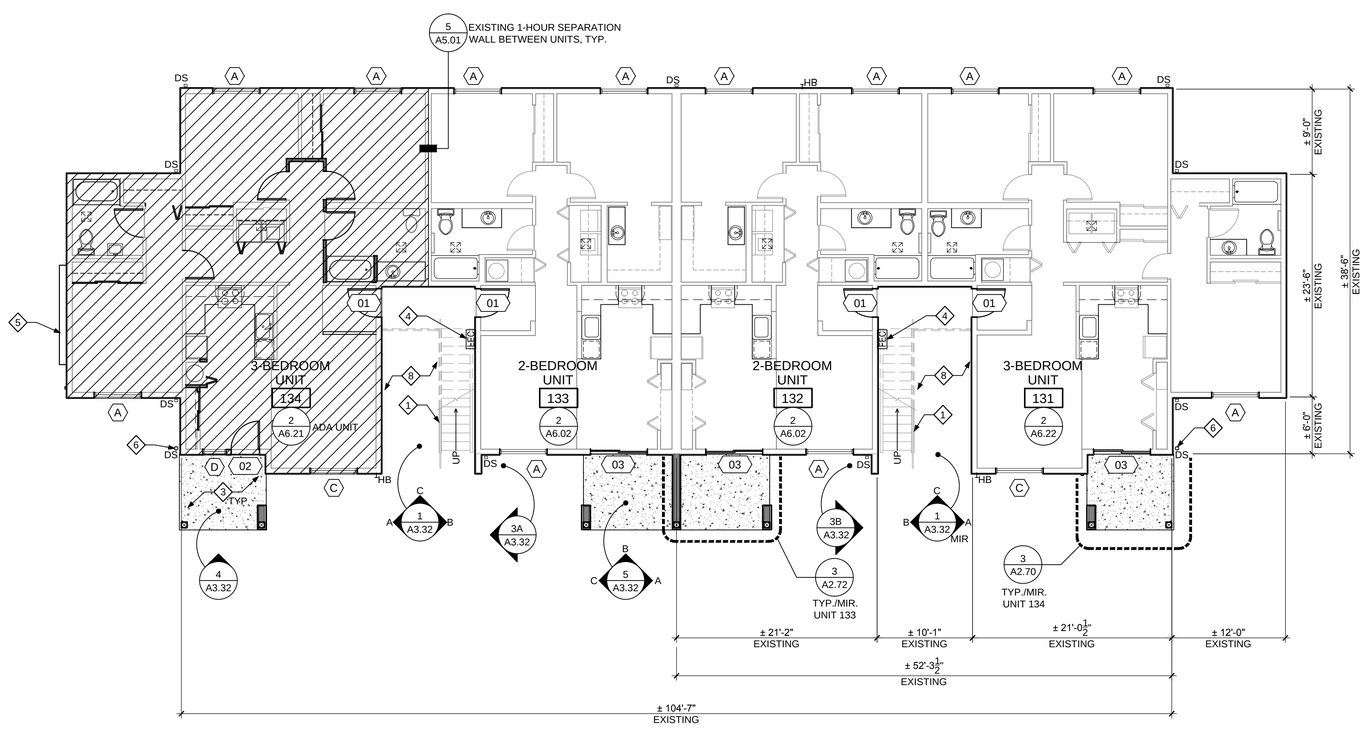

1 BUILDING 06 - FIRST FLOOR PLAN

SCALE: 1/8" = 1'-0"

GENERAL PLAN NOTES

A. ANY OBSERVED, KNOWN, OR VERIFIED CONDITION(S) THAT ARE MATERIAL TO THE PERFORMANCE OF THE WORK DESCRIBED BY THE CONTRACT DOCUMENTS OR OTHERWISE REQUIRE INTERPRETATION SHALL BE PROMPTLY REPORTED TO THE ARCHITECT IN WRITING ON SUCH FORM AS REQUIRED BY THE CONTRACT DOCUMENTS.

B. REFER TO ENLARGED PLANS FOR DETAILED SCOPE OF INTERIOR WORK.

C. PRIMARY INTERIOR SCOPE OF WORK IS LIMITED TO GROUND FLOOR UNITS. SECOND AND THIRD FLOOR INTERIOR WORK CONSISTS PRIMARILY OF PATCHING/ PAINTING AS REQUIRED FOR NEW DUCT WORK, WINDOW REPLACEMENT, NEW FIRE SPRINKLERS (3-STORY BUILDINGS), ETC.

D. REFER TO EXTERIOR FINISH SCHEDULES FOR FINISH MATERIALS, COLORS, AND TEXTURES.

E. EXISTING DIMENSIONS SHOWN ARE FOR REFERENCE ONLY AND MUST BE VERIFIED IN FIELD.

F. ALL BUILDINGS ARE TO RECEIVE NEW GUTTERS AND DOWNSPOUTS. INSTALL DOWNSPOUTS IN SAME LOCATIONS AS EXISTING, UNLESS NOTED OTHERWISE.

G. ALL UNITS TO RECEIVE CARBON MONOXIDE DETECTORS.

FLOOR PLAN LEGEND

- CONCRETE SLAB-ON-GRADE
- ELEVATED FRAMED DECK WITH PRECAST CONCRETE DECKING
- ACCESSIBLE UNIT
- DS — APPROXIMATE DOWNSPOUT LOCATION
- HB — APPROXIMATE EXISTING HOSE BIB LOCATION - INSTALL NEW FROST FREE HOSE BIB

FLOOR PLAN KEY NOTES

1. EXISTING STAIR ASSEMBLY TO REMAIN
2. NEW DECK AND GUARDRAIL ASSEMBLY - REFER TO ENLARGED DECK PLAN SHEETS
3. NEW SLAB-ON-GRADE CONCRETE PATIO
4. EXISTING FIRE EXTINGUISHER AND CABINET. REMOVE, CLEAN, PROTECT AND REINSTALL.
5. EXISTING BUILDING POWER, VOICE,DATA AND CABLE TV. APPURTENANCES TO BE INTEGRATED INTO BUILDING ENCLOSURE.
6. RAIN DRAIN BOOT AND DOWNSPOUT TO BE RELOCATED
7. CRAWL SPACE VENT FAN
8. EXISTING CONCRETE TO REMAIN
9. 20"x30" ATTIC ACCESS HATCH ABOVE. SEE DETAIL 5/A5.18

KEY PLAN - N.T.S.

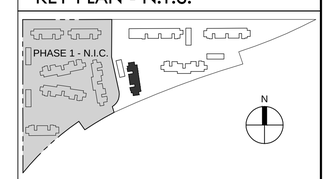

REGISTERED ARCHITECT
BRIAN D. CARLETON
PORTLAND, OREGON
2918
STATE OF OREGON

CARLETON HART ARCHITECTURE
322 nw 8th avenue portland, oregon 97209
t 503 243 2252 | f 503 243 3261 | carletonhart.com

PARKWAY VILLAGE : EAST
APARTMENT REHABILITATION
SALEM HOUSING AUTHORITY

PERMIT REVIEW / BID SET

FLOOR PLANS
BUILDING 06

PROJ NO.
21348

01.21.14

COPYRIGHT - CARLETON HART ARCHITECTURE DO NOT REPRODUCE WITHOUT PERMISSION

A2.31

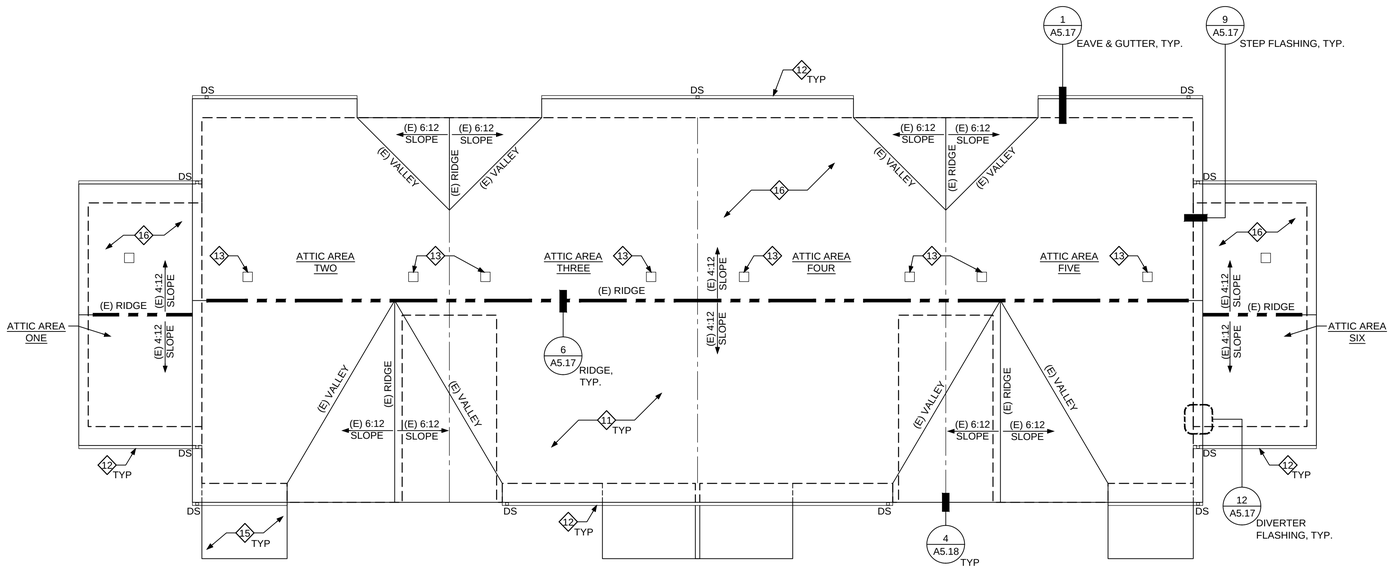

ATTIC VENTILATION CALCULATIONS

	ATTIC AREA - ONE		ATTIC AREA - TWO		ATTIC AREA - THREE		ATTIC AREA - FOUR		ATTIC AREA - FIVE		ATTIC AREA - SIX	
	AREA	LENGTH	AREA	LENGTH	AREA	LENGTH	AREA	LENGTH	AREA	LENGTH	AREA	LENGTH
AREA	40,788 SQ IN		150,222 SQ IN		145,692 SQ IN		145,692 SQ IN		150,222 SQ IN		40,788 SQ IN	
REQUIRED VENTING	136 SQ IN		501 SQ IN		486 SQ IN		486 SQ IN		501 SQ IN		136 SQ IN	
RIDGE VENT	183 SQ IN	10'-6"	437 SQ IN	25'-0"	455 SQ IN	26'-0"	455 SQ IN	26'-0"	437 SQ IN	25'-0"	183 SQ IN	10'-6"
EAVE VENT	69.6 SQ IN	12'-0"	75.4 SQ IN	13'-0"	104.4 SQ IN	18'-0"	104.4 SQ IN	18'-0"	75.4 SQ IN	13'-0"	69.6 SQ IN	12'-0"
TOTAL PROVIDED	**252.6 SQ IN**		**512.4 SQ IN**		**559.4 SQ IN**		**559.4 SQ IN**		**512.4 SQ IN**		**252.6 SQ IN**	

ATTIC VENTILATION

ATTIC VENTILATION CALCULATIONS BASED UPON THE OSSC - SECTION 1203.2 ATTIC SPACES:

1. THE NET FREE VENTILATED AREA SHALL NOT BE LESS THAN 1/300 OF THE AREA OF THE SPACE VENTILATED.
2. EACH ATTIC AREA SEPARATED BY FIRE WALLS, PARTITION WALLS, SOUND BARRIERS, OR OTHER SIMILAR OBSTRUCTION SHALL BE VENTILATED INDIVIDUALLY AND COMPLY WITH THE VENTILATION REQUIREMENTS FOR THAT SPACE.
3. ROOF VENTILATION IS ACHIEVED THROUGH A COMBINATION OF CONTINUOUS RIDGE VENTS AND EAVE VENTS.
   3.1. RIDGE VENT_____: 17.5 SQ. IN. / 1'-0" (LINEAR FOOT)
   3.2. EAVE VENT_____: 5.8 SQ. IN. / 1'-0" (LINEAR FOOT)
4. NO OPENING INTO ATTICS GREATER THAN ¼" IS PERMITTED.

1 BUILDING 06 - ROOF PLAN

SCALE: 1/8" = 1'-0"

GENERAL PLAN NOTES

A. ANY OBSERVED, KNOWN, OR VERIFIED CONDITION(S) THAT ARE MATERIAL TO THE PERFORMANCE OF THE WORK DESCRIBED BY THE CONTRACT DOCUMENTS OR OTHERWISE REQUIRE INTERPRETATION SHALL BE PROMPTLY REPORTED TO THE ARCHITECT IN WRITING ON SUCH FORM AS REQUIRED BY THE CONTRACT DOCUMENTS.

B. REFER TO ENLARGED PLANS FOR DETAILED SCOPE OF INTERIOR WORK.

C. PRIMARY INTERIOR SCOPE OF WORK IS LIMITED TO GROUND FLOOR UNITS. SECOND AND THIRD FLOOR INTERIOR WORK CONSISTS PRIMARILY OF PATCHING/ PAINTING AS REQUIRED FOR NEW DUCT WORK, WINDOW REPLACEMENT, NEW FIRE SPRINKLERS (3-STORY BUILDINGS), ETC.

D. REFER TO EXTERIOR FINISH SCHEDULES FOR FINISH MATERIALS, COLORS, AND TEXTURES.

E. EXISTING DIMENSIONS SHOWN ARE FOR REFERENCE ONLY AND MUST BE VERIFIED IN FIELD.

F. ALL BUILDINGS ARE TO RECEIVE NEW GUTTERS AND DOWNSPOUTS. INSTALL DOWNSPOUTS IN SAME LOCATIONS AS EXISTING, UNLESS NOTED OTHERWISE.

G. ALL UNITS TO RECEIVE CARBON MONOXIDE DETECTORS.

KEY PLAN - N.T.S.

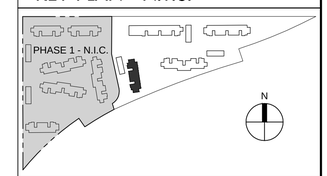

ROOF PLAN LEGEND

- DASHED LINE INDICATES ITEM BELOW
- DS — GUTTER AND APPROXIMATE LOCATION OF DOWNSPOUT
- RIDGE VENT
- APPROXIMATE LOCATION OF ATTIC DRAFT STOP

ROOF PLAN KEY NOTES

11. ROOFING ASSEMBLY - REMOVE EXISTING AND PROVIDE NEW ROOFING AND UNDERLAYMENT
12. NEW METAL GUTTER
13. MECHANICAL EXHAUST PENETRATION - SEAL AND INSULATE ALL DUCTS
14. LOW PROFILE CAP VENT
15. NEW DECK ASSEMBLY BELOW
16. NOT ALL ROOF PENETRATIONS SHOWN. CONTRACTOR TO VERIFY EXISTING MECHANICAL AND PLUMBING VENTS AND TERMINATE ABOVE FINISHED ROOFING WITH APPROVED CAP VENT DUCT TERMINATION OR PIPE VENT FLASHING - TYP.

COPYRIGHT - CARLETON HART ARCHITECTURE DO NOT REPRODUCE WITHOUT PERMISSION

REGISTERED ARCHITECT
BRIAN D. CARLETON
PORTLAND, OREGON
2918
STATE OF OREGON

CARLETON HART ARCHITECTURE
322 nw 8th avenue portland, oregon 97209
t 503 243 2252 | f 503 243 3261 | carletonhart.com

PARKWAY VILLAGE : EAST
APARTMENT REHABILITATION
SALEM HOUSING AUTHORITY

PERMIT REVIEW / BID SET

ROOF PLAN
BUILDING 06

PROJ NO.
21348

01.21.14

A2.32

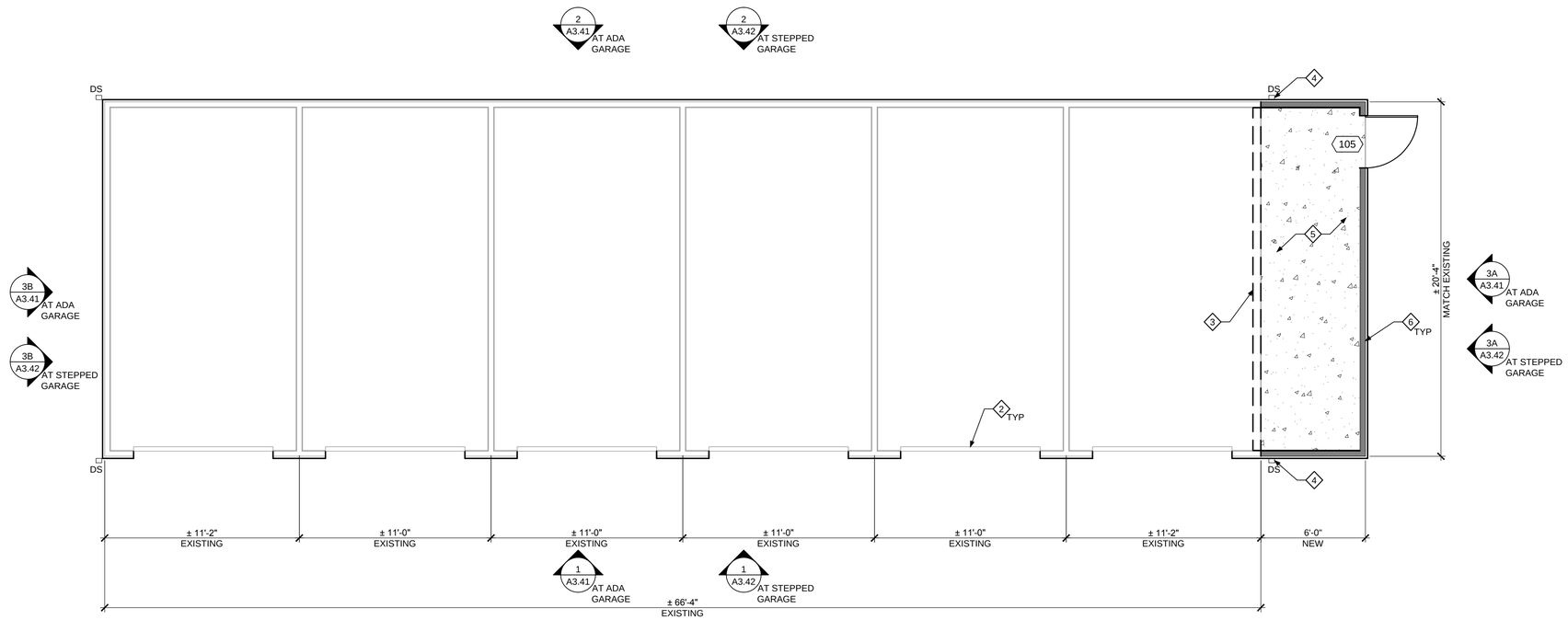

2 GARAGE FLOOR PLAN

SCALE: 1/4" = 1'-0"

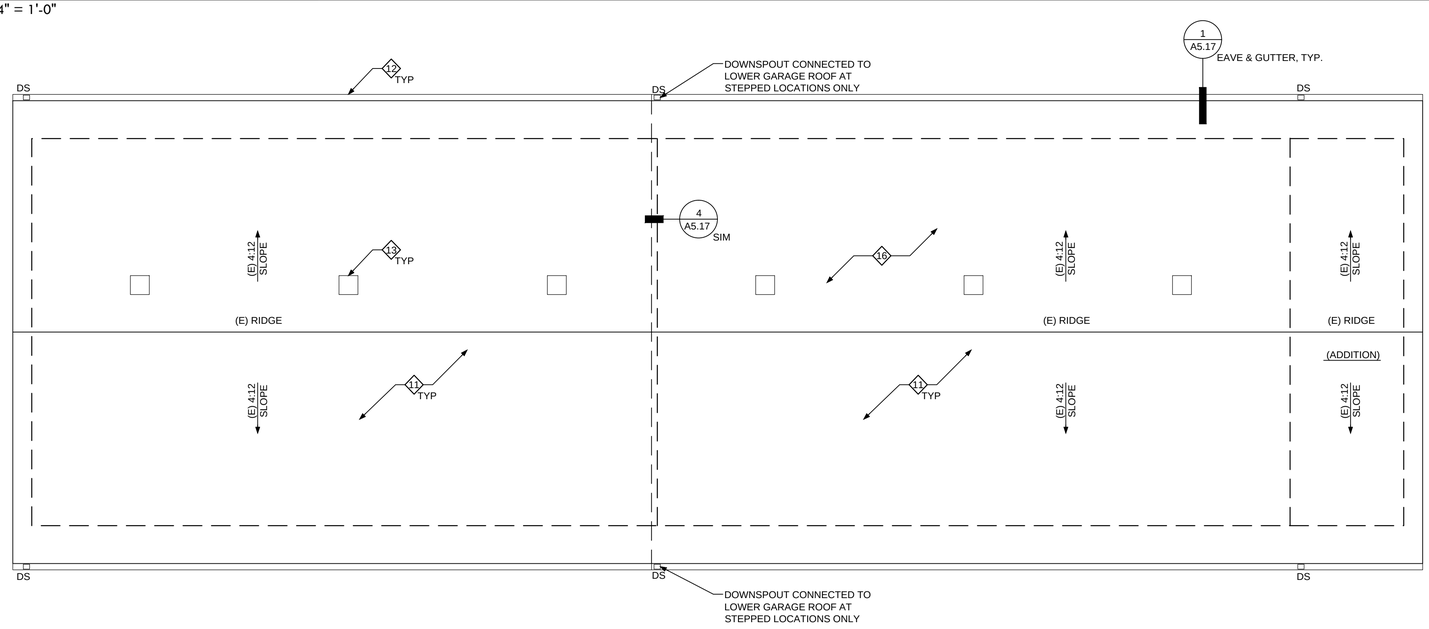

1 GARAGE ROOF PLAN

SCALE: 1/4" = 1'-0"

GENERAL PLAN NOTES

A. ANY OBSERVED, KNOWN, OR VERIFIED CONDITION(S) THAT ARE MATERIAL TO THE PERFORMANCE OF THE WORK DESCRIBED BY THE CONTRACT DOCUMENTS OR OTHERWISE REQUIRE INTERPRETATION SHALL BE PROMPTLY REPORTED TO THE ARCHITECT IN WRITING ON SUCH FORM AS REQUIRED BY THE CONTRACT DOCUMENTS.

B. REFER TO EXTERIOR FINISH SCHEDULES FOR FINISH MATERIALS, COLORS, AND TEXTURES.

C. EXISTING DIMENSIONS SHOWN ARE FOR REFERENCE ONLY AND MUST BE VERIFIED IN FIELD.

D. ALL BUILDINGS ARE TO RECEIVE NEW GUTTERS AND DOWNSPOUTS. INSTALL DOWNSPOUTS IN SAME LOCATIONS AS EXISTING, UNLESS NOTED OTHERWISE.

FLOOR PLAN LEGEND

CONCRETE SLAB-ON-GRADE

DS APPROXIMATE DOWNSPOUT LOCATION

NEW WALL - FULL HEIGHT

FLOOR PLAN KEY NOTES

1. EXISTING GARAGE STALL
2. EXISTING GARAGE DOOR TO REMAIN, DOOR TO RECEIVE AUTOMATIC OPENER
3. EXISTING WALL TO BE REMOVED
4. RAIN DRAIN BOOT AND DOWNSPOUT TO BE RELOCATED AT NEW ADDITION ONLY
5. NEW CONCRETE SLAB ON GRADE WITH TURN DOWN FOOTING
6. NEW UNINSULATED WALL

KEY PLAN - N.T.S.

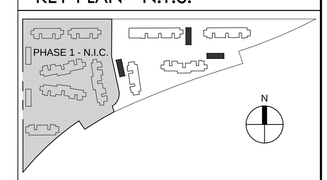

ROOF PLAN LEGEND

DASHED LINE INDICATES ITEM BELOW

DS GUTTER AND APPROXIMATE LOCATION OF DOWNSPOUT

ROOF PLAN KEY NOTES

11. ROOFING ASSEMBLY
12. NEW METAL GUTTER
13. STATIC ROOF VENT, INSTALL ONE PER GARAGE BAY, CENTERED, TYP.
14. NOT ALL ROOF PENETRATIONS SHOWN. CONTRACTOR TO VERIFY EXISTING MECHANICAL AND PLUMBING VENTS AND TERMINATE ABOVE FINISHED ROOFING WITH APPROVED CAP VENT DUCT TERMINATION OR PIPE VENT FLASHING - TYP.

COPYRIGHT - CARLETON HART ARCHITECTURE DO NOT REPRODUCE WITHOUT PERMISSION

REGISTERED ARCHITECT BRIAN D. CARLETON PORTLAND, OREGON 2918 STATE OF OREGON

CARLETON HART ARCHITECTURE
322 nw 8th avenue portland, oregon 97209
t 503 243 2252 | f 503 243 3261 | carletonhart.com

PARKWAY VILLAGE : EAST
APARTMENT REHABILITATION
SALEM HOUSING AUTHORITY

PERMIT REVIEW / BID SET

FLOOR & ROOF PLANS
GARAGE
FLOOR PLANS

PROJ NO.
21348

01.21.14

A2.41

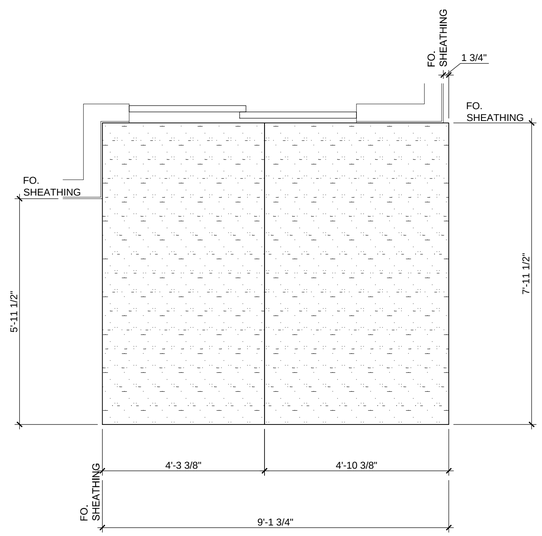

2 PRECAST CONCRETE - FLOOR 2
SCALE: 1/2" = 1'-0"

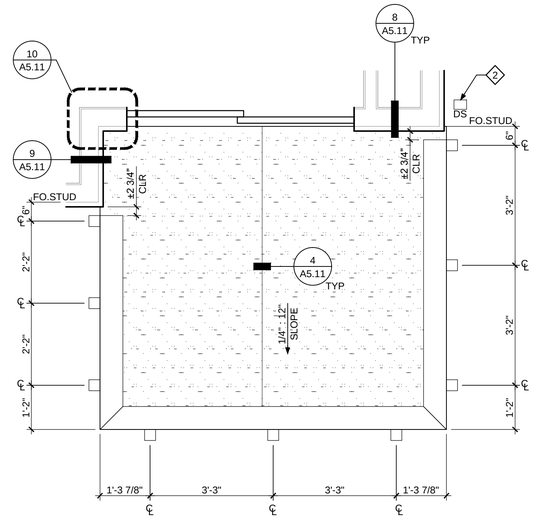

4 DECK TYPE A-1 PLAN - FLOOR 2
SCALE: 1/2" = 1'-0"

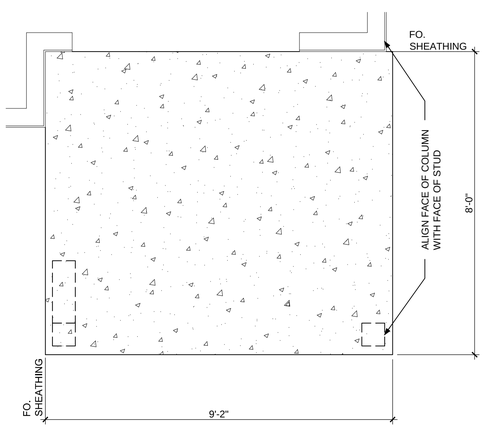

1 CAST-IN-PLACE CONCRETE - FLOOR 1
SCALE: 1/2" = 1'-0"

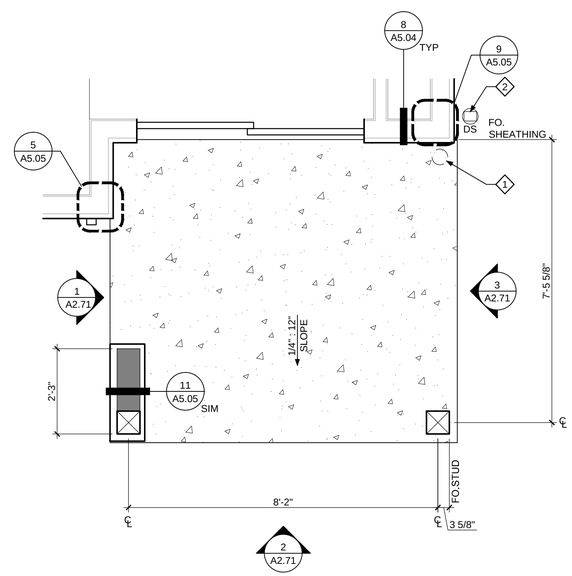

3 DECK TYPE A-1 PLAN - FLOOR 1
SCALE: 1/2" = 1'-0"

GENERAL DECK NOTES

A. ANY OBSERVED, KNOWN, OR VERIFIED CONDITION(S) THAT ARE MATERIAL TO THE PERFORMANCE OF THE WORK DESCRIBED BY THE CONTRACT DOCUMENTS OR OTHERWISE REQUIRE INTERPRETATION SHALL BE PROMPTLY REPORTED TO THE ARCHITECT IN WRITING ON SUCH FORM AS REQUIRED BY THE CONTRACT DOCUMENTS.

B. REFER TO SCHEDULES FOR FINISH MATERIALS, COLORS, AND TEXTURES.

C. DIMENSIONS SHOWN ARE FROM FACE OF EXISTING STUD WALL, UNLESS NOTED OTHERWISE.

D. ALL BUILDINGS ARE TO RECEIVE NEW GUTTERS AND DOWNSPOUTS. INSTALL DOWNSPOUTS IN SAME LOCATIONS AS EXISTING, UNLESS NOTED OTHERWISE.

E. REFER TO OVERALL BUILDING PLANS AND ELEVATIONS FOR DOOR TYPE.

DECK PLAN LEGEND

- CONCRETE SLAB-ON-GRADE
- ELEVATED FRAMED DECK WITH PRECAST CONCRETE DECKING
- DS — APPROXIMATE DOWNSPOUT LOCATION
- HB — APPROXIMATE HOSE BIB LOCATION

KEY NOTES

1. EXISTING RAIN DRAIN BOOT. TO BE RELOCATED.
2. DOWNSPOUT, TYPICAL
3. DOWNSPOUT CLEANOUT AT ±3'-0" ABOVE FINISHED GRADE, TYPICAL. SEE 4/A5.07
4. GUARDRAIL TOP CAP
5. GUARDRAIL SUPPORT
6. PICKET - TYPICAL

REGISTERED ARCHITECT
BRIAN D. CARLETON
PORTLAND, OREGON
2918
STATE OF OREGON

CARLETON HART ARCHITECTURE
322 nw 8th avenue portland, oregon 97209
t 503 243 2252 | f 503 243 3261 | carletonhart.com

PARKWAY VILLAGE : EAST
APARTMENT REHABILITATION
SALEM HOUSING AUTHORITY

PERMIT REVIEW / BID SET

EXTERIOR DECK TYPE A-1 PLANS

PROJ NO. 21348

01.21.14

COPYRIGHT - CARLETON HART ARCHITECTURE DO NOT REPRODUCE WITHOUT PERMISSION

A2.70

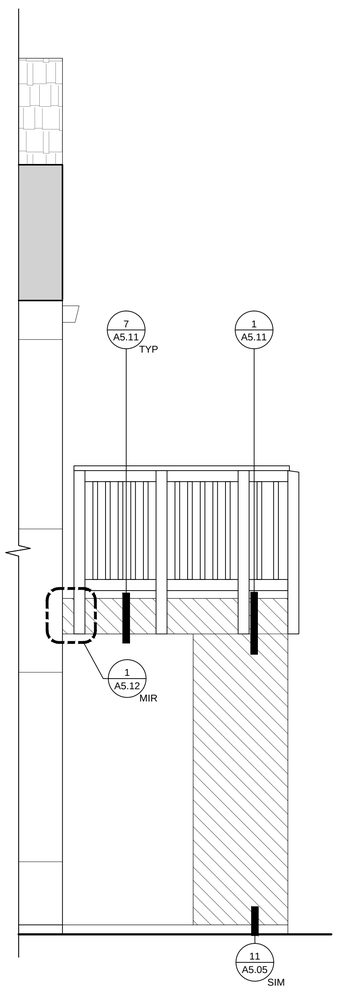

1 DECK ELEVATION - SIDE
SCALE: 1/2" = 1'-0"

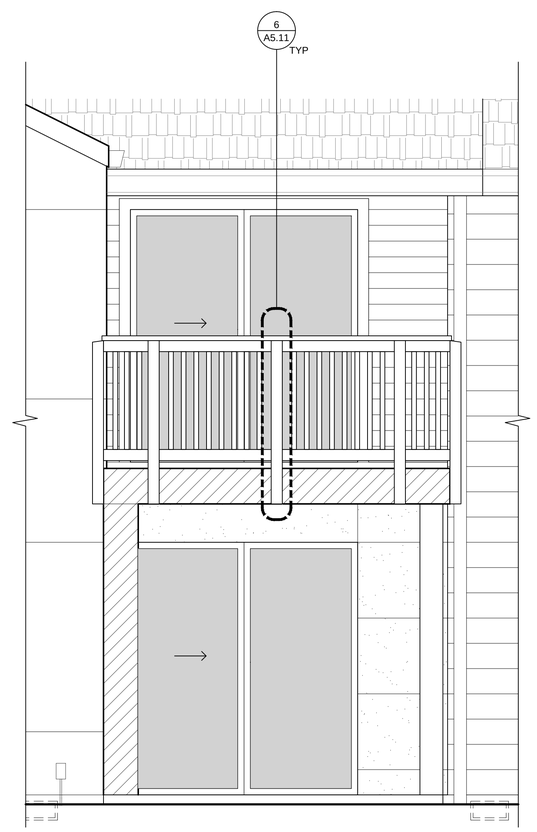

2 DECK ELEVATION - FRONT
SCALE: 1/2" = 1'-0"

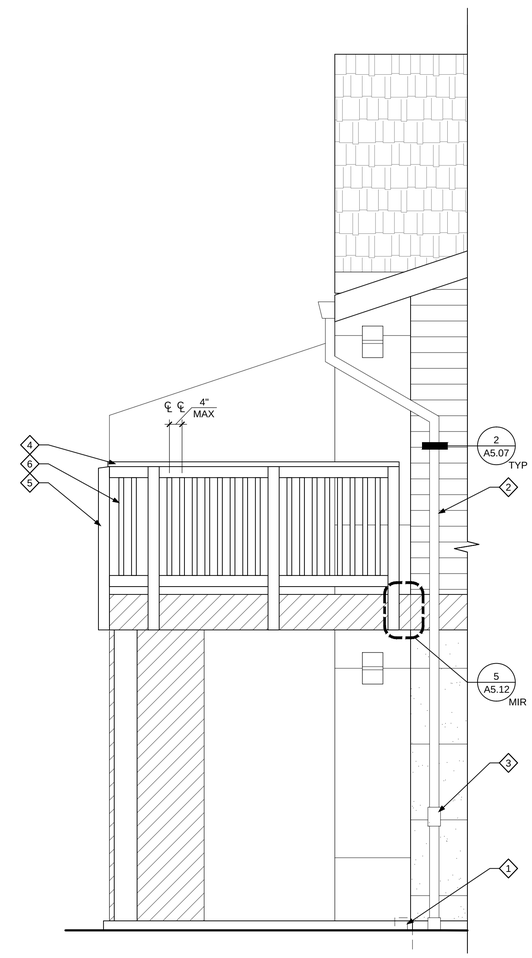

3 DECK ELEVATION - SIDE
SCALE: 1/2" = 1'-0"

GENERAL DECK NOTES

A. ANY OBSERVED, KNOWN, OR VERIFIED CONDITION(S) THAT ARE MATERIAL TO THE PERFORMANCE OF THE WORK DESCRIBED BY THE CONTRACT DOCUMENTS OR OTHERWISE REQUIRE INTERPRETATION SHALL BE PROMPTLY REPORTED TO THE ARCHITECT IN WRITING ON SUCH FORM AS REQUIRED BY THE CONTRACT DOCUMENTS.

B. REFER TO SCHEDULES FOR FINISH MATERIALS, COLORS, AND TEXTURES.

C. DIMENSIONS SHOWN ARE FROM FACE OF EXISTING STUD WALL, UNLESS NOTED OTHERWISE.

D. ALL BUILDINGS ARE TO RECEIVE NEW GUTTERS AND DOWNSPOUTS. INSTALL DOWNSPOUTS IN SAME LOCATIONS AS EXISTING, UNLESS NOTED OTHERWISE.

E. REFER TO OVERALL BUILDING PLANS AND ELEVATIONS FOR DOOR TYPE.

ELEVATION LEGEND

FC-01	COLOR:	PT-01
	LAP, 8" EXPOSURE	
FC-02	COLOR:	PT-02
	LAP, 5" EXPOSURE	
FC-03	COLOR:	PT-03
	PANEL	
FC-04	COLOR:	PT-04
	PANEL	
FC-05	COLOR:	PT-05
	PANEL	
TR-01	COLOR:	PT-05

GLAZED FENESTRATION

ROOF SYSTEM

KEY NOTES

1. EXISTING RAIN DRAIN BOOT. TO BE RELOCATED.
2. DOWNSPOUT, TYPICAL
3. DOWNSPOUT CLEANOUT AT ±3'-0" ABOVE FINISHED GRADE, TYPICAL. SEE 4/A5.07
4. GUARDRAIL TOP CAP
5. GUARDRAIL SUPPORT
6. PICKET - TYPICAL

REGISTERED ARCHITECT
BRIAN D. CARLETON
PORTLAND, OREGON
2918
STATE OF OREGON

CARLETON HART ARCHITECTURE
322 nw 8th avenue portland, oregon 97209
t 503 243 2252 | f 503 243 3261 | carletonhart.com

PARKWAY VILLAGE : EAST
APARTMENT REHABILITATION
SALEM HOUSING AUTHORITY

PERMIT REVIEW / BID SET

EXTERIOR DECK TYPE A-1
ELEVATIONS

PROJ NO.
21348

01.21.14

COPYRIGHT - CARLETON HART ARCHITECTURE DO NOT REPRODUCE WITHOUT PERMISSION

A2.71

4 PRECAST CONCRETE - FLOOR 2
SCALE: 1/2" = 1'-0"

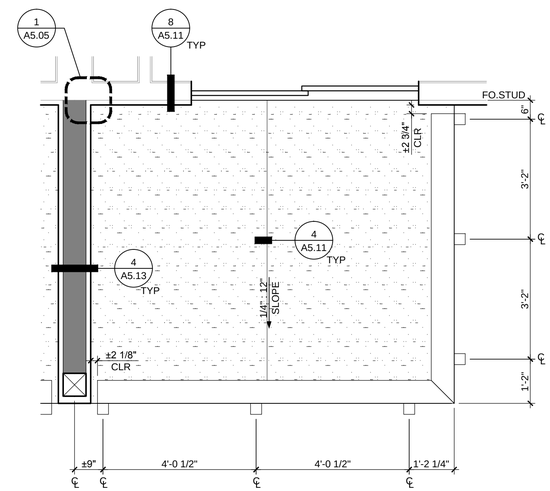

4 DECK TYPE B-1 PLAN - FLOOR 2
SCALE: 1/2" = 1'-0"

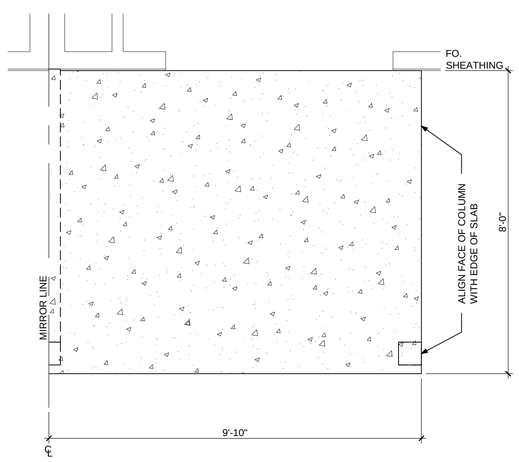

3 CAST-IN-PLACE CONCRETE - FLOOR 1
SCALE: 1/2" = 1'-0"

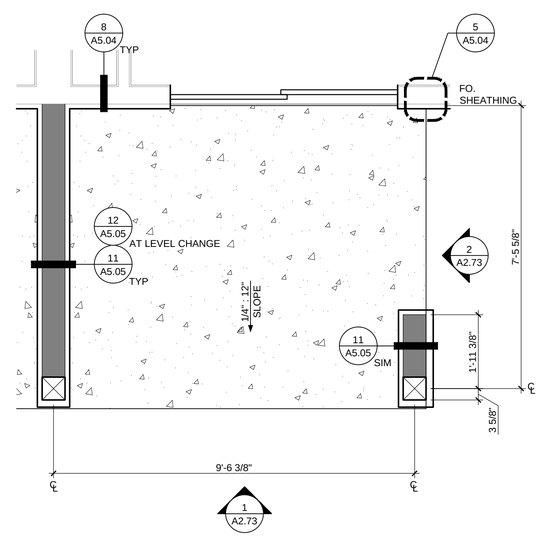

3 DECK TYPE B-1 PLAN - FLOOR 1
SCALE: 1/2" = 1'-0"

GENERAL DECK NOTES

A. ANY OBSERVED, KNOWN, OR VERIFIED CONDITION(S) THAT ARE MATERIAL TO THE PERFORMANCE OF THE WORK DESCRIBED BY THE CONTRACT DOCUMENTS OR OTHERWISE REQUIRE INTERPRETATION SHALL BE PROMPTLY REPORTED TO THE ARCHITECT IN WRITING ON SUCH FORM AS REQUIRED BY THE CONTRACT DOCUMENTS.

B. REFER TO SCHEDULES FOR FINISH MATERIALS, COLORS, AND TEXTURES.

C. DIMENSIONS SHOWN ARE FROM FACE OF EXISTING STUD WALL, UNLESS NOTED OTHERWISE.

D. ALL BUILDINGS ARE TO RECEIVE NEW GUTTERS AND DOWNSPOUTS. INSTALL DOWNSPOUTS IN SAME LOCATIONS AS EXISTING, UNLESS NOTED OTHERWISE.

E. REFER TO OVERALL BUILDING PLANS AND ELEVATIONS FOR DOOR TYPE.

DECK PLAN LEGEND

- CONCRETE SLAB-ON-GRADE
- ELEVATED FRAMED DECK WITH PRECAST CONCRETE DECKING
- DS — APPROXIMATE DOWNSPOUT LOCATION
- HB — APPROXIMATE HOSE BIB LOCATION

KEY NOTES

1. EXISTING RAIN DRAIN BOOT. TO BE RELOCATED.
2. DOWNSPOUT, TYPICAL
3. DOWNSPOUT CLEANOUT AT ±3'-0" ABOVE FINISHED GRADE, TYPICAL. SEE 4/A5.07
4. GUARDRAIL TOP CAP
5. GUARDRAIL SUPPORT
6. PICKET - TYPICAL

REGISTERED ARCHITECT
BRIAN D. CARLETON
PORTLAND, OREGON
2918
STATE OF OREGON

CARLETON HART ARCHITECTURE
322 nw 8th avenue portland, oregon 97209
t 503 243 2262 | f 503 243 3261 | carletonhart.com

PARKWAY VILLAGE : EAST
APARTMENT REHABILITATION
SALEM HOUSING AUTHORITY

PERMIT REVIEW / BID SET

EXTERIOR DECK TYPE B-1 PLANS

PROJ NO.
21348

01.21.14

COPYRIGHT - CARLETON HART ARCHITECTURE DO NOT REPRODUCE WITHOUT PERMISSION

A2.72

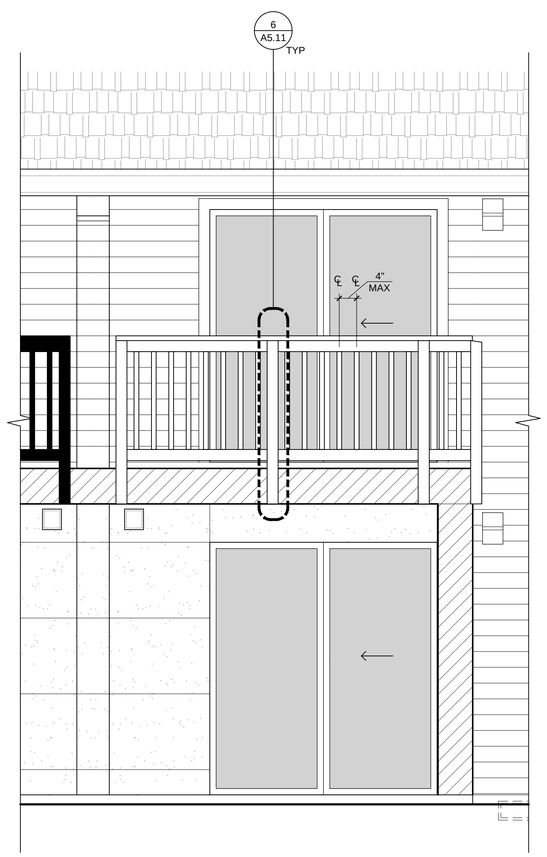

1 DECK ELEVATION - FRONT
SCALE: 1/2" = 1'-0"

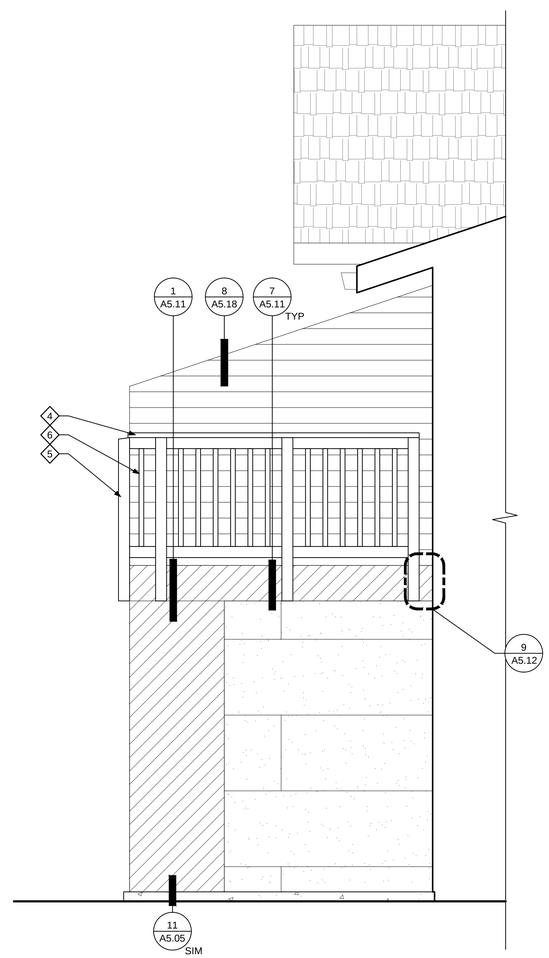

2 DECK ELEVATION - SIDE
SCALE: 1/2" = 1'-0"

GENERAL DECK NOTES

A. ANY OBSERVED, KNOWN, OR VERIFIED CONDITION(S) THAT ARE MATERIAL TO THE PERFORMANCE OF THE WORK DESCRIBED BY THE CONTRACT DOCUMENTS OR OTHERWISE REQUIRE INTERPRETATION SHALL BE PROMPTLY REPORTED TO THE ARCHITECT IN WRITING ON SUCH FORM AS REQUIRED BY THE CONTRACT DOCUMENTS.

B. REFER TO SCHEDULES FOR FINISH MATERIALS, COLORS, AND TEXTURES.

C. DIMENSIONS SHOWN ARE FROM FACE OF EXISTING STUD WALL, UNLESS NOTED OTHERWISE.

D. ALL BUILDINGS ARE TO RECEIVE NEW GUTTERS AND DOWNSPOUTS. INSTALL DOWNSPOUTS IN SAME LOCATIONS AS EXISTING, UNLESS NOTED OTHERWISE.

E. REFER TO OVERALL BUILDING PLANS AND ELEVATIONS FOR DOOR TYPE.

ELEVATION LEGEND

FC-01	COLOR:	PT-01
	LAP, 8" EXPOSURE	
FC-02	COLOR:	PT-02
	LAP, 5" EXPOSURE	
FC-03	COLOR:	PT-03
	PANEL	
FC-04	COLOR:	PT-04
	PANEL	
FC-05	COLOR:	PT-05
	PANEL	
TR-01	COLOR:	PT-05

GLAZED FENESTRATION

ROOF SYSTEM

KEY NOTES

1. EXISTING RAIN DRAIN BOOT. TO BE RELOCATED.
2. DOWNSPOUT, TYPICAL
3. DOWNSPOUT CLEANOUT AT ±3'-0" ABOVE FINISHED GRADE, TYPICAL. SEE 4/A5.07
4. GUARDRAIL TOP CAP
5. GUARDRAIL SUPPORT
6. PICKET - TYPICAL

REGISTERED ARCHITECT
BRIAN D. CARLETON
PORTLAND, OREGON
2918
STATE OF OREGON

CARLETON HART ARCHITECTURE
322 nw 8th avenue portland, oregon 97209
t 503 243 2252 | f 503 243 3261 | carletonhart.com

PARKWAY VILLAGE : EAST
APARTMENT REHABILITATION
SALEM HOUSING AUTHORITY

PERMIT REVIEW / BID SET

EXTERIOR DECK TYPE B-1
ELEVATIONS

PROJ NO.
21348

01.21.14

COPYRIGHT - CARLETON HART ARCHITECTURE DO NOT REPRODUCE WITHOUT PERMISSION

A2.73

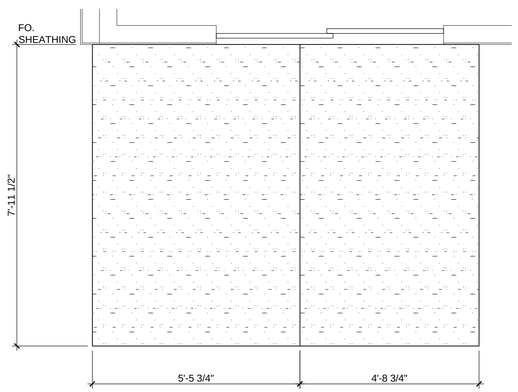

2 PRECAST CONCRETE - FLOOR 2
SCALE: 1/2" = 1'-0"

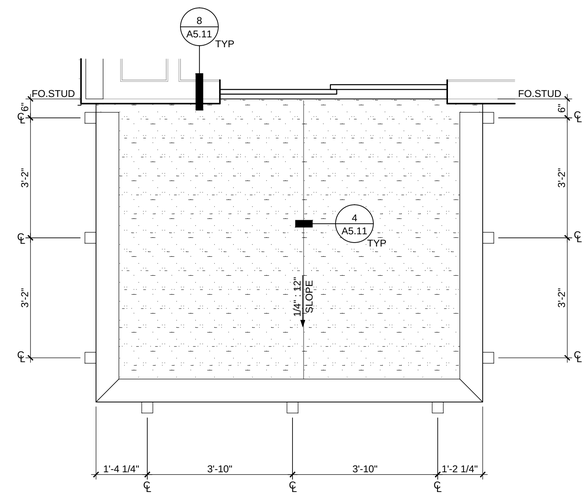

4 DECK TYPE C-1 PLAN - FLOOR 2
SCALE: 1/2" = 1'-0"

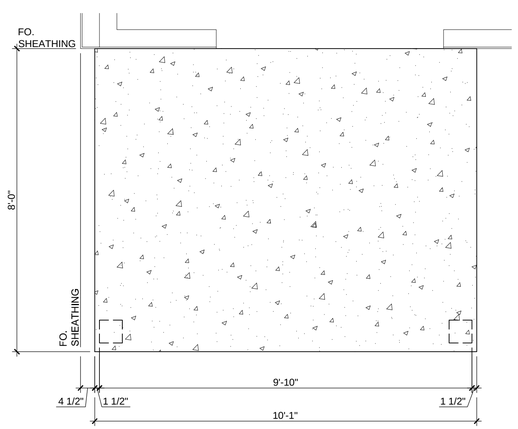

1 CAST-IN-PLACE CONCRETE - FLOOR 1
SCALE: 1/2" = 1'-0"

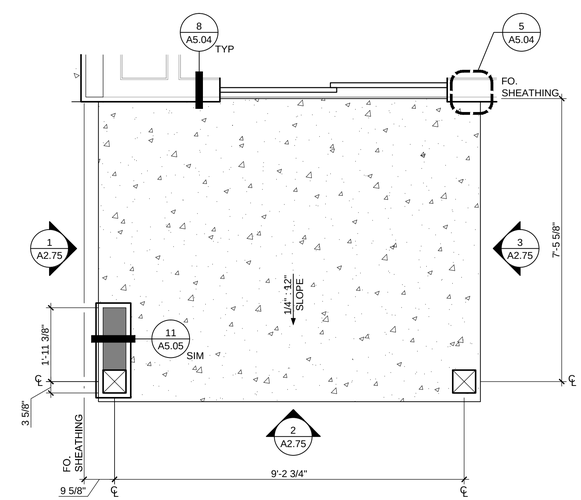

3 DECK TYPE C-1 PLAN - FLOOR 1
SCALE: 1/2" = 1'-0"

GENERAL DECK NOTES

A. ANY OBSERVED, KNOWN, OR VERIFIED CONDITION(S) THAT ARE MATERIAL TO THE PERFORMANCE OF THE WORK DESCRIBED BY THE CONTRACT DOCUMENTS OR OTHERWISE REQUIRE INTERPRETATION SHALL BE PROMPTLY REPORTED TO THE ARCHITECT IN WRITING ON SUCH FORM AS REQUIRED BY THE CONTRACT DOCUMENTS.

B. REFER TO SCHEDULES FOR FINISH MATERIALS, COLORS, AND TEXTURES.

C. DIMENSIONS SHOWN ARE FROM FACE OF EXISTING STUD WALL, UNLESS NOTED OTHERWISE.

D. ALL BUILDINGS ARE TO RECEIVE NEW GUTTERS AND DOWNSPOUTS. INSTALL DOWNSPOUTS IN SAME LOCATIONS AS EXISTING, UNLESS NOTED OTHERWISE.

E. REFER TO OVERALL BUILDING PLANS AND ELEVATIONS FOR DOOR TYPE.

DECK PLAN LEGEND

- CONCRETE SLAB-ON-GRADE
- ELEVATED FRAMED DECK WITH PRECAST CONCRETE DECKING
- DS — APPROXIMATE DOWNSPOUT LOCATION
- HB — APPROXIMATE HOSE BIB LOCATION

KEY NOTES

1. EXISTING RAIN DRAIN BOOT. TO BE RELOCATED.
2. DOWNSPOUT, TYPICAL
3. DOWNSPOUT CLEANOUT AT ±3'-0" ABOVE FINISHED GRADE, TYPICAL. SEE 4/A5.07
4. GUARDRAIL TOP CAP
5. GUARDRAIL SUPPORT
6. PICKET - TYPICAL

REGISTERED ARCHITECT
BRIAN D. CARLETON
PORTLAND, OREGON
2918
STATE OF OREGON

CARLETON HART ARCHITECTURE
322 nw 8th avenue portland, oregon 97209
t 503 243 2252 | f 503 243 3261 | carletonhart.com

PARKWAY VILLAGE : EAST
APARTMENT REHABILITATION
SALEM HOUSING AUTHORITY

PERMIT REVIEW / BID SET

EXTERIOR DECK TYPE C-1 PLANS

PROJ NO.
21348

01.21.14

COPYRIGHT - CARLETON HART ARCHITECTURE DO NOT REPRODUCE WITHOUT PERMISSION

A2.74

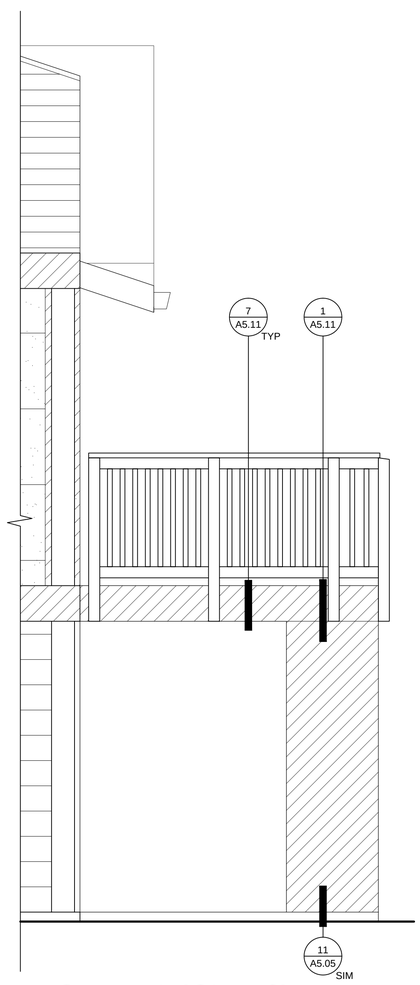

1 DECK ELEVATION - SIDE
SCALE: 1/2" = 1'-0"

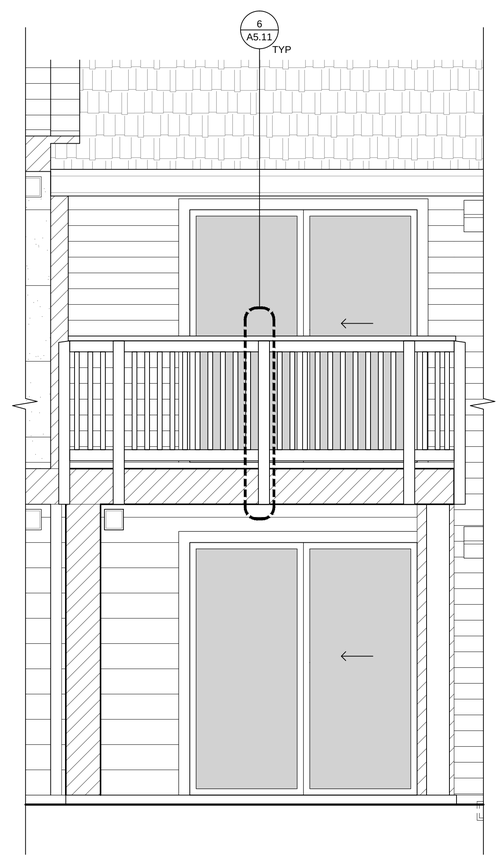

2 DECK ELEVATION - FRONT
SCALE: 1/2" = 1'-0"

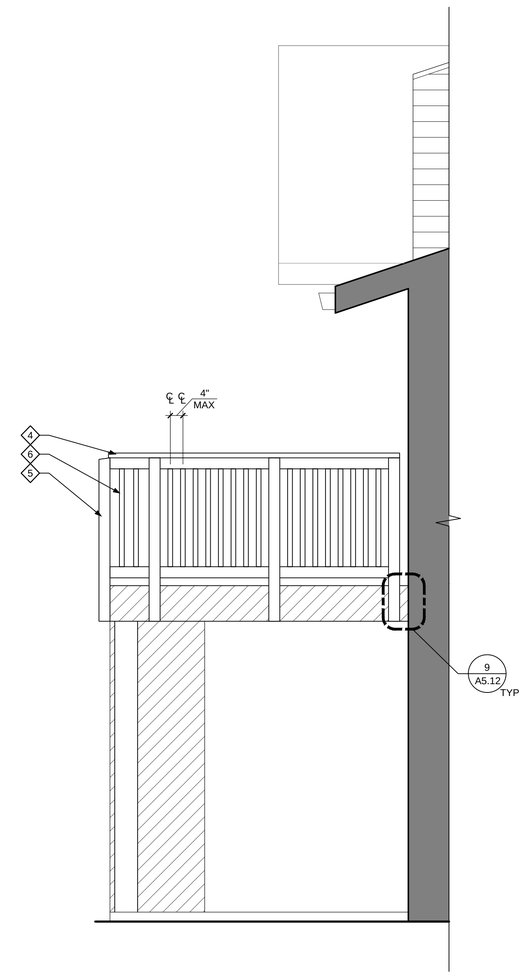

3 DECK ELEVATION - SIDE
SCALE: 1/2" = 1'-0"

GENERAL DECK NOTES

A. ANY OBSERVED, KNOWN, OR VERIFIED CONDITION(S) THAT ARE MATERIAL TO THE PERFORMANCE OF THE WORK DESCRIBED BY THE CONTRACT DOCUMENTS OR OTHERWISE REQUIRE INTERPRETATION SHALL BE PROMPTLY REPORTED TO THE ARCHITECT IN WRITING ON SUCH FORM AS REQUIRED BY THE CONTRACT DOCUMENTS.

B. REFER TO SCHEDULES FOR FINISH MATERIALS, COLORS, AND TEXTURES.

C. DIMENSIONS SHOWN ARE FROM FACE OF EXISTING STUD WALL, UNLESS NOTED OTHERWISE.

D. ALL BUILDINGS ARE TO RECEIVE NEW GUTTERS AND DOWNSPOUTS. INSTALL DOWNSPOUTS IN SAME LOCATIONS AS EXISTING, UNLESS NOTED OTHERWISE.

E. REFER TO OVERALL BUILDING PLANS AND ELEVATIONS FOR DOOR TYPE.

ELEVATION LEGEND

FC-01	COLOR:	PT-01
	LAP, 8" EXPOSURE	
FC-02	COLOR:	PT-02
	LAP, 5" EXPOSURE	
FC-03	COLOR:	PT-03
	PANEL	
FC-04	COLOR:	PT-04
	PANEL	
FC-05	COLOR:	PT-05
	PANEL	
TR-01	COLOR:	PT-05

GLAZED FENESTRATION

ROOF SYSTEM

KEY NOTES

1. EXISTING RAIN DRAIN BOOT. TO BE RELOCATED.
2. DOWNSPOUT, TYPICAL
3. DOWNSPOUT CLEANOUT AT ±3'-0" ABOVE FINISHED GRADE, TYPICAL. SEE 4/A5.07
4. GUARDRAIL TOP CAP
5. GUARDRAIL SUPPORT
6. PICKET - TYPICAL

REGISTERED ARCHITECT
BRIAN D. CARLETON
PORTLAND, OREGON
2918
STATE OF OREGON

CARLETON HART ARCHITECTURE
322 nw 8th avenue portland, oregon 97209
t 503 243 2252 | f 503 243 3261 | carletonhart.com

PARKWAY VILLAGE : EAST
APARTMENT REHABILITATION
SALEM HOUSING AUTHORITY

PERMIT REVIEW / BID SET

EXTERIOR DECK TYPE C-1
ELEVATIONS

PROJ NO.
21348

01.21.14

COPYRIGHT - CARLETON HART ARCHITECTURE DO NOT REPRODUCE WITHOUT PERMISSION

A2.75

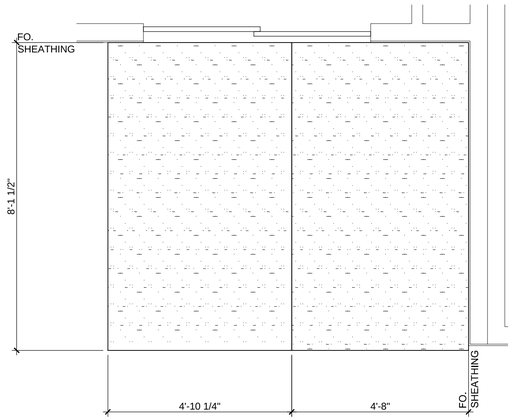

3 PRECAST CONCRETE - FLOOR 3
SCALE: 1/2" = 1'-0"

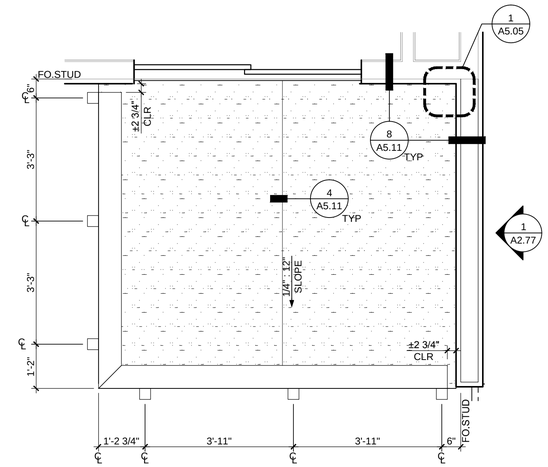

6 DECK TYPE D-1 DECK PLAN - FLOOR 3
SCALE: 1/2" = 1'-0"

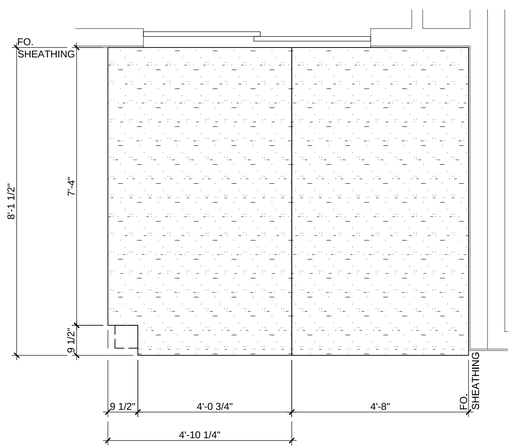

2 PRECAST CONCRETE - FLOOR 2
SCALE: 1/2" = 1'-0"

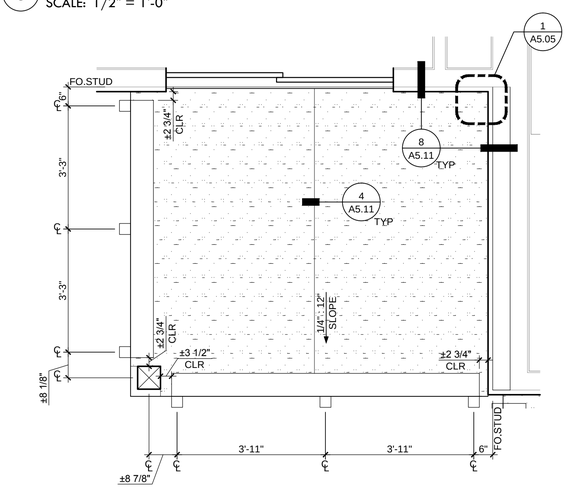

5 DECK TYPE D-1 DECK PLAN - FLOOR 2
SCALE: 1/2" = 1'-0"

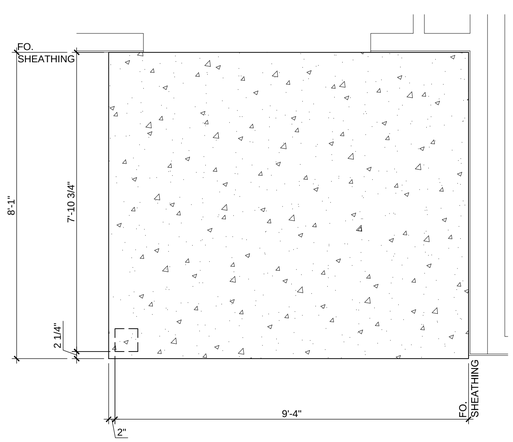

1 CAST-IN-PLACE CONCRETE - FLOOR 1
SCALE: 1/2" = 1'-0"

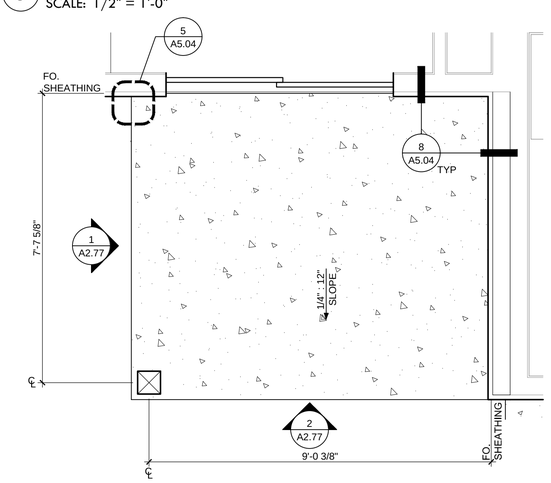

4 DECK TYPE D-1 PLAN - FLOOR 1
SCALE: 1/2" = 1'-0"

GENERAL DECK NOTES

A. ANY OBSERVED, KNOWN, OR VERIFIED CONDITION(S) THAT ARE MATERIAL TO THE PERFORMANCE OF THE WORK DESCRIBED BY THE CONTRACT DOCUMENTS OR OTHERWISE REQUIRE INTERPRETATION SHALL BE PROMPTLY REPORTED TO THE ARCHITECT IN WRITING ON SUCH FORM AS REQUIRED BY THE CONTRACT DOCUMENTS.

B. REFER TO SCHEDULES FOR FINISH MATERIALS, COLORS, AND TEXTURES.

C. DIMENSIONS SHOWN ARE FROM FACE OF EXISTING STUD WALL, UNLESS NOTED OTHERWISE.

D. ALL BUILDINGS ARE TO RECEIVE NEW GUTTERS AND DOWNSPOUTS. INSTALL DOWNSPOUTS IN SAME LOCATIONS AS EXISTING, UNLESS NOTED OTHERWISE.

E. REFER TO OVERALL BUILDING PLANS AND ELEVATIONS FOR DOOR TYPE.

DECK PLAN LEGEND

CONCRETE SLAB-ON-GRADE

ELEVATED FRAMED DECK WITH PRECAST CONCRETE DECKING

DS — APPROXIMATE DOWNSPOUT LOCATION

HB — APPROXIMATE HOSE BIB LOCATION

KEY NOTES

1. EXISTING RAIN DRAIN BOOT. TO BE RELOCATED.
2. DOWNSPOUT, TYPICAL
3. DOWNSPOUT CLEANOUT AT ±3'-0" ABOVE FINISHED GRADE, TYPICAL. SEE 4/A5.07
4. GUARDRAIL TOP CAP
5. GUARDRAIL SUPPORT
6. PICKET - TYPICAL

REGISTERED ARCHITECT
BRIAN D. CARLETON
PORTLAND, OREGON
2918
STATE OF OREGON

CARLETON HART ARCHITECTURE
322 nw 8th avenue portland, oregon 97209
t 503 243 2262 | f 503 243 3261 | carletonhart.com

PARKWAY VILLAGE : EAST
APARTMENT REHABILITATION
SALEM HOUSING AUTHORITY

PERMIT REVIEW / BID SET

EXTERIOR DECK TYPE D-1 PLANS

PROJ NO. 21348

01.21.14

A2.76

COPYRIGHT - CARLETON HART ARCHITECTURE DO NOT REPRODUCE WITHOUT PERMISSION

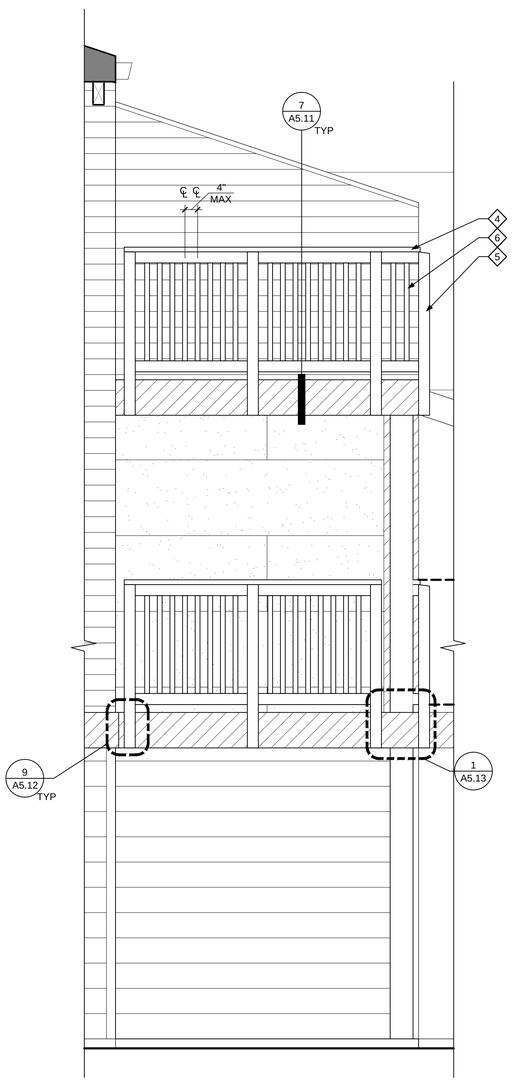

1 DECK ELEVATION - SIDE
SCALE: 1/2" = 1'-0"

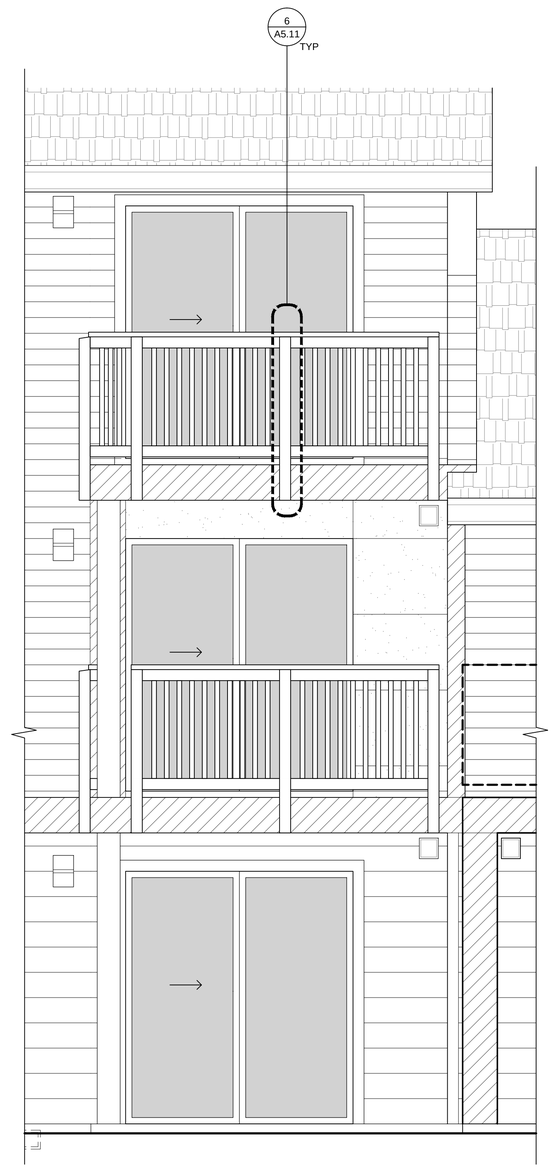

2 DECK ELEVATION - FRONT
SCALE: 1/2" = 1'-0"

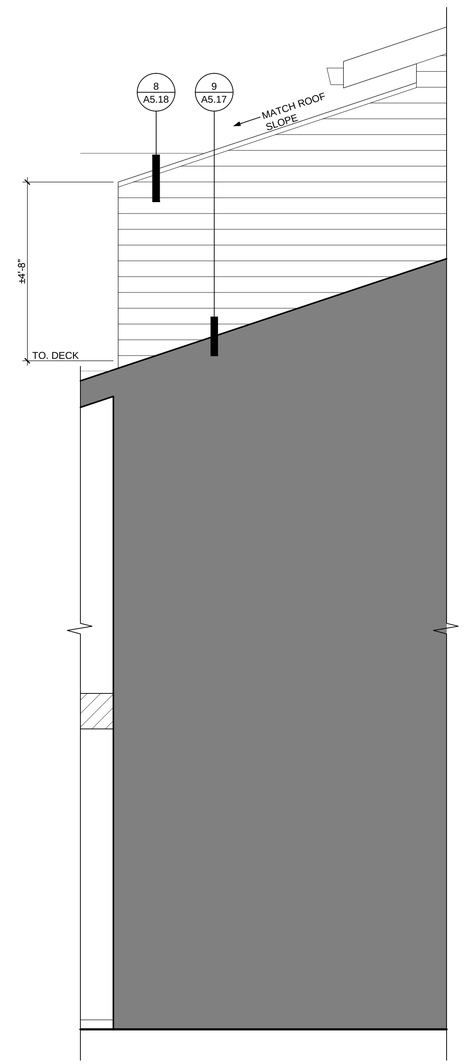

3 DECK ELEVATION - SIDE
SCALE: 1/2" = 1'-0"

GENERAL DECK NOTES

A. ANY OBSERVED, KNOWN, OR VERIFIED CONDITION(S) THAT ARE MATERIAL TO THE PERFORMANCE OF THE WORK DESCRIBED BY THE CONTRACT DOCUMENTS OR OTHERWISE REQUIRE INTERPRETATION SHALL BE PROMPTLY REPORTED TO THE ARCHITECT IN WRITING ON SUCH FORM AS REQUIRED BY THE CONTRACT DOCUMENTS.

B. REFER TO SCHEDULES FOR FINISH MATERIALS, COLORS, AND TEXTURES.

C. DIMENSIONS SHOWN ARE FROM FACE OF EXISTING STUD WALL, UNLESS NOTED OTHERWISE.

D. ALL BUILDINGS ARE TO RECEIVE NEW GUTTERS AND DOWNSPOUTS. INSTALL DOWNSPOUTS IN SAME LOCATIONS AS EXISTING, UNLESS NOTED OTHERWISE.

E. REFER TO OVERALL BUILDING PLANS AND ELEVATIONS FOR DOOR TYPE.

ELEVATION LEGEND

FC-01	COLOR:	PT-01
	LAP, 8" EXPOSURE	
FC-02	COLOR:	PT-02
	LAP, 5" EXPOSURE	
FC-03	COLOR:	PT-03
	PANEL	
FC-04	COLOR:	PT-04
	PANEL	
FC-05	COLOR:	PT-05
	PANEL	
TR-01	COLOR:	PT-05

GLAZED FENESTRATION

ROOF SYSTEM

KEY NOTES

1. EXISTING RAIN DRAIN BOOT. TO BE RELOCATED.
2. DOWNSPOUT, TYPICAL
3. DOWNSPOUT CLEANOUT AT ±3'-0" ABOVE FINISHED GRADE, TYPICAL. SEE 4/A5.07
4. GUARDRAIL TOP CAP
5. GUARDRAIL SUPPORT
6. PICKET - TYPICAL

REGISTERED ARCHITECT
BRIAN D. CARLETON
PORTLAND, OREGON
2918
STATE OF OREGON

CARLETON HART ARCHITECTURE
322 nw 8th avenue portland, oregon 97209
t 503 243 2252 | f 503 243 3261 | carletonhart.com

PARKWAY VILLAGE : EAST
APARTMENT REHABILITATION
SALEM HOUSING AUTHORITY

PERMIT REVIEW / BID SET

EXTERIOR DECK TYPE D-1
ELEVATIONS

PROJ NO.
21348

01.21.14

COPYRIGHT - CARLETON HART ARCHITECTURE DO NOT REPRODUCE WITHOUT PERMISSION

A2.77

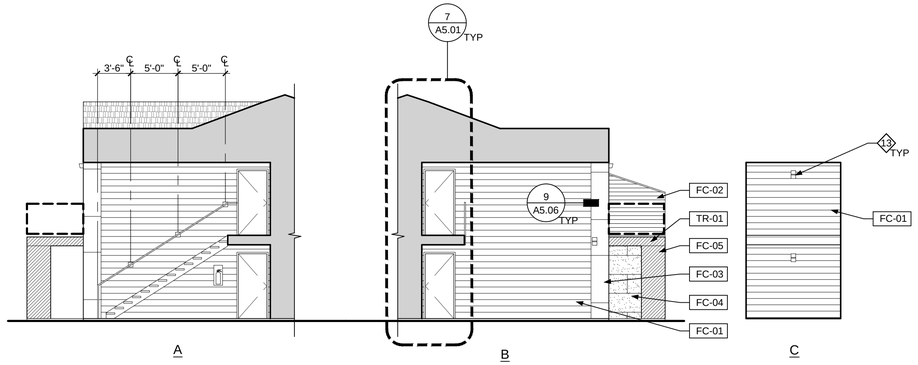

4 BUILDING 03 - ENTRY 1 ELEVATIONS
SCALE: 1/8" = 1'-0"

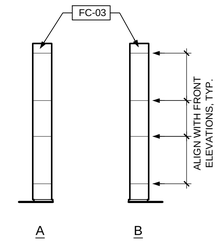

5 BUILDING 03 - WING WALLS
SCALE: 1/8" = 1'-0"

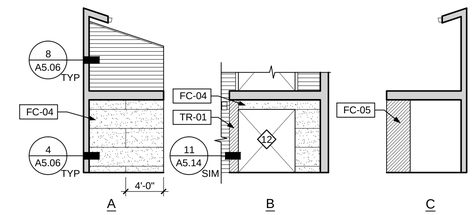

6 INSIDE ELEVATIONS AT DECK B-1
SCALE: 1/8" = 1'-0"

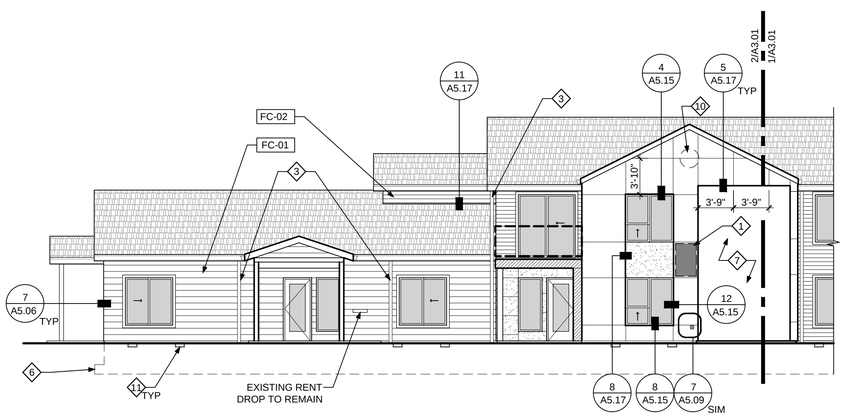

2 BUILDING 03 - SOUTH ELEVATION
SCALE: 1/8" = 1'-0"

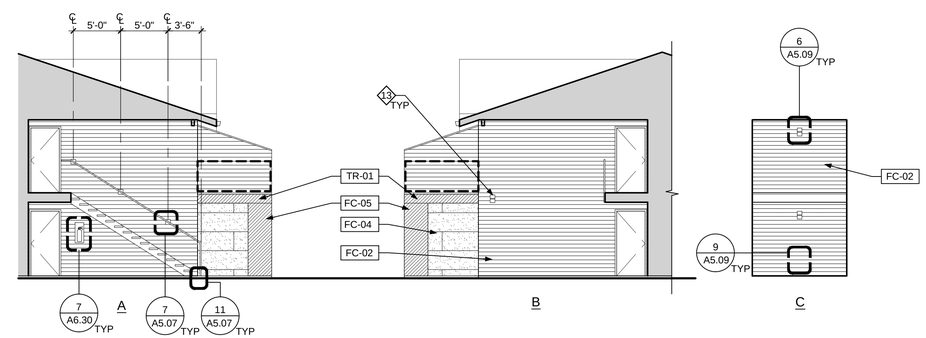

3 BUILDING 03 - MIDDLE ENTRY ELEVATIONS
SCALE: 1/8" = 1'-0"

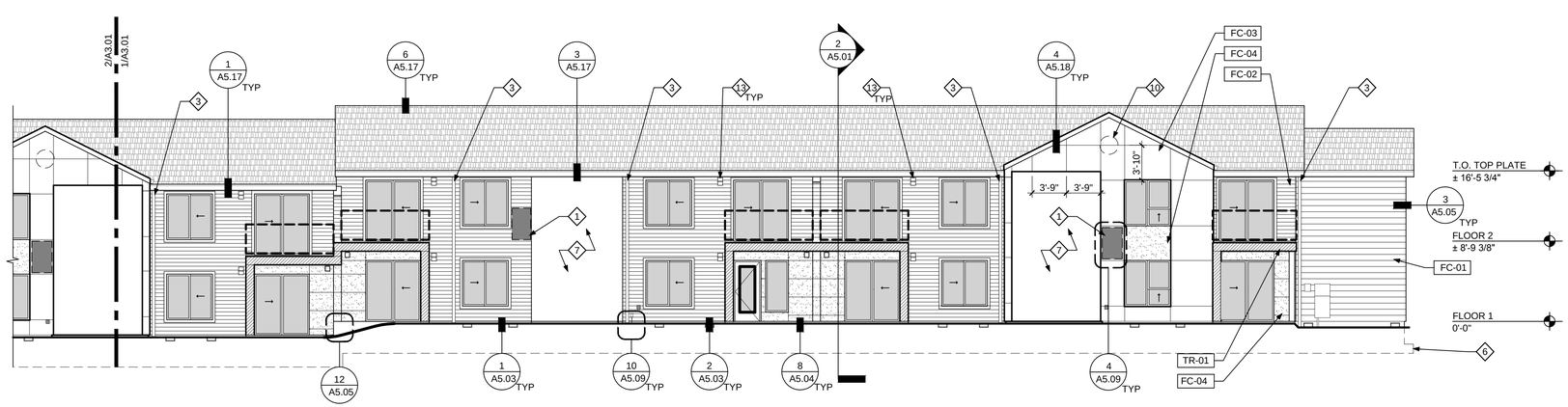

1 BUILDING 03 - SOUTH ELEVATION
SCALE: 1/8" = 1'-0"

GENERAL ELEVATION NOTES

A. ANY OBSERVED, KNOWN, OR VERIFIED CONDITION(S) THAT ARE MATERIAL TO THE PERFORMANCE OF THE WORK DESCRIBED BY THE CONTRACT DOCUMENTS OR OTHERWISE REQUIRE INTERPRETATION SHALL BE PROMPTLY REPORTED TO THE ARCHITECT IN WRITING ON SUCH FORM AS REQUIRED BY THE CONTRACT DOCUMENTS.

B. EXISTING ENTRY STAIR AND GUARDRAIL ASSEMBLIES ARE TO REMAIN IN PLACE. PROTECT DURING CONSTRUCTION.

C. REFER TO EXTERIOR FINISH SCHEDULE FOR FINISH MATERIALS, COLORS, AND TEXTURES.

D. EXISTING DIMENSIONS SHOWN ARE FOR REFERENCE ONLY AND MUST BE VERIFIED IN FIELD.

E. EXISTING VOICE/DATA CABLING SHALL BE FIELD VERIFIED AND INTEGRATED INTO NEW CLADDING ASSEMBLY TO THE GREATEST EXTENT POSSIBLE.

F. NOT ALL APPURTENANCES MAY BE INDICATED. CONTRACTOR TO FIELD VERIFY SIZES, QUANTITIES, LOCATIONS, AND TYPES PRIOR TO COMMENCEMENT OF WORK.

G. PAINT ALL APPURTENANCE BLOCKS AND ASSOCIATED METAL FLASHING TO MATCH ADJACENT SIDING.

H. PAINT ALL ELECTRICAL EQUIPMENT AND ASSOCIATED MOUNTING PANELS AND METAL FLASHING TO MATCH ADJACENT SIDING. MASK OFF AND PROTECT LATCHES, LOCKS, LABELS, TAGS, VIEW PANELS, ETC.

I. PAINT UNDERSIDE OF EAVES AND RAKES TO MATCH ADJACENT SIDING COLOR.

J. PAINT ALL METAL VENT COVERS TO MATCH ADJACENT SIDING. PROTECT AND CLEAN OPERABLE PARTS TO ENSURE PROPER FUNCTION.

K. GUTTERS AND DOWNSPOUTS TO BE PREFINISHED METAL.

L. FASCIA AND BARGE RAFTERS PAINTED TO MATCH GUTTERS AND DOWNSPOUTS.

M. INFORMATION WITHIN EXTERIOR ENTRY NOT SHOWN FOR CLARITY ON OVERALL ELEVATION.

N. NEW GARAGE EXTENSION AND SIDE DOOR ONLY IN SPECIFIC LOCATIONS. REFER TO SITE PLAN.

EXTERIOR FINISH/MATERIALS LEGEND

FC-01	COLOR:	PT-01
	LAP, 8" EXPOSURE	
FC-02	COLOR:	PT-02
	LAP, 5" EXPOSURE	
FC-03	COLOR:	PT-03
	PANEL	
FC-04	COLOR:	PT-04
	PANEL	
FC-05	COLOR:	PT-05
	PANEL	
TR-01	COLOR:	PT-05

NOTE: TR-01 TO BE 12". ALL OTHER TRIM TO BE 4", UON ON ELEVATIONS AND DETAILS.

GLAZED FENESTRATION

ROOF SYSTEM

NEW GUARDRAIL SYSTEM SHOWN DASHED FOR CLARITY

ELEVATION KEY NOTES

1. APPROXIMATE LOCATION OF BUILDING SIGNAGE
2. REMOVE AND REINSTALL EXISTING MOUNTED LIGHT
3. NEW DOWNSPOUT CONNECTED TO EXISTING STORM SYSTEM. UNLESS NOTED OTHERWISE - REFER TO PLANS
4. MECHANICAL PENETRATION AT WALL
5. FIBER CEMENT TRIM - TYPICAL
6. APPROXIMATE LINE OF CONCRETE FOOTING/STEM WALL
7. EXTERIOR ENTRY
8. EXISTING CONDUIT/WIRING TO BE INTEGRATED INTO BUILDING ENCLOSURE
9. EXISTING TELEPHONE/CABLE WIRING TO BE INTEGRATED INTO BUILDING ENCLOSURE
10. EXISTING ROUND LOUVER TO BE REMOVED
11. EXISTING FOUNDATION VENT TO REMAIN
12. DOOR NOT SHOWN FOR CLARITY
13. REMOVE EXISTING LIGHT FIXTURE. INSTALL NEW ENERGY STAR LIGHT FIXTURE IN SAME LOCATION
14. NEW EXTERIOR ENERGY STAR LIGHT FIXTURE AND LAMP

KEY PLAN - N.T.S.

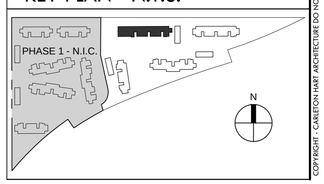

COPYRIGHT - CARLETON HART ARCHITECTURE DO NOT REPRODUCE WITHOUT PERMISSION

REGISTERED ARCHITECT
BRIAN D. CARLETON
PORTLAND, OREGON
2918
STATE OF OREGON

CARLETON HART ARCHITECTURE
322 nw 8th avenue portland, oregon 97209
t 503 243 3261 | f 503 243 2252 | carletonhart.com

PARKWAY VILLAGE : EAST
APARTMENT REHABILITATION
SALEM HOUSING AUTHORITY

PERMIT REVIEW / BID SET

EXTERIOR ELEVATIONS
BUILDING 03

PROJ NO.
21348

01.21.14

A3.01

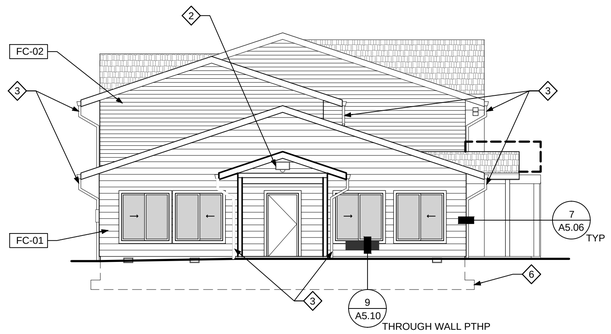

3 BUILDING 03 - WEST ELEVATION
SCALE: 1/8" = 1'-0"

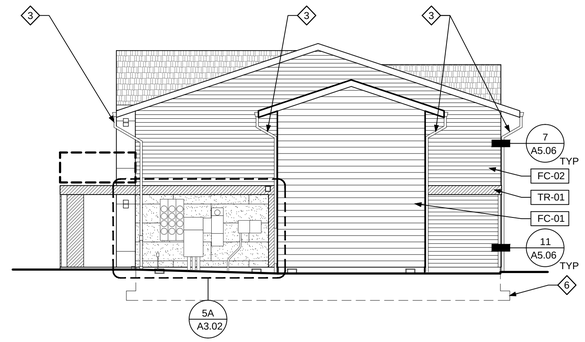

4 BUILDING 03 - EAST ELEVATION
SCALE: 1/8" = 1'-0"

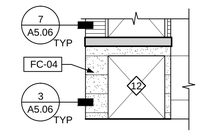

6 INSIDE ELEVATIONS AT DECK A-1
SCALE: 1/8" = 1'-0"

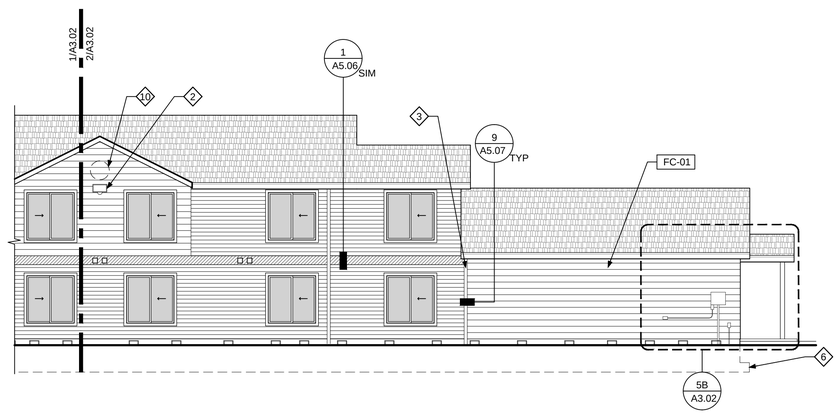

2 BUILDING 03 - NORTH ELEVATION
SCALE: 1/8" = 1'-0"

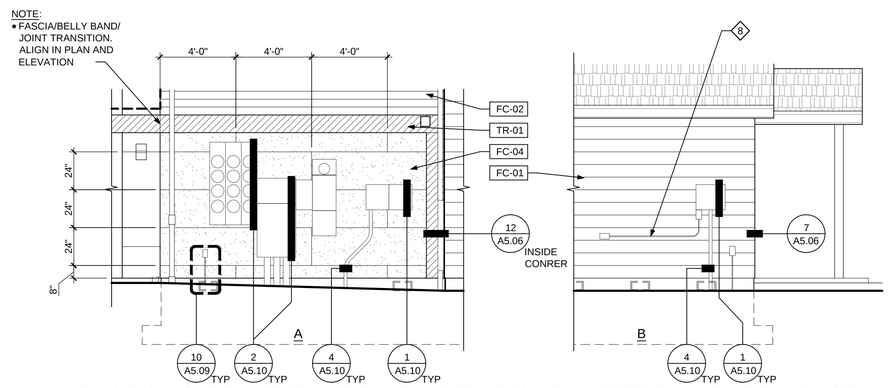

5 BUILDING 03 - ELEVATIONS AT EXISTING METERS AND CONDUIT
SCALE: 1/4" = 1'-0"

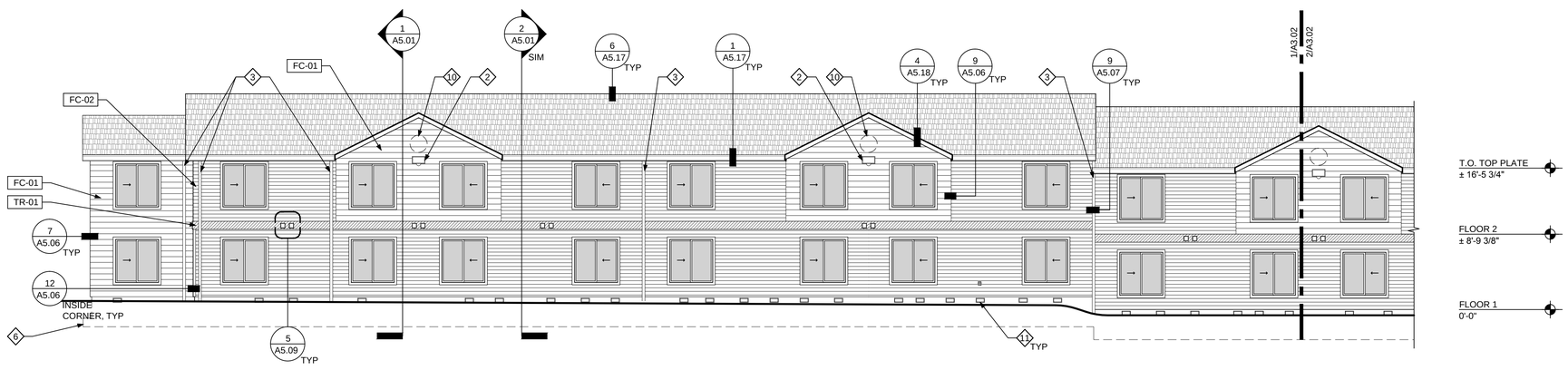

1 BUILDING 03 - NORTH ELEVATION
SCALE: 1/8" = 1'-0"

GENERAL ELEVATION NOTES

A. ANY OBSERVED, KNOWN, OR VERIFIED CONDITION(S) THAT ARE MATERIAL TO THE PERFORMANCE OF THE WORK DESCRIBED BY THE CONTRACT DOCUMENTS OR OTHERWISE REQUIRE INTERPRETATION SHALL BE PROMPTLY REPORTED TO THE ARCHITECT IN WRITING ON SUCH FORM AS REQUIRED BY THE CONTRACT DOCUMENTS.

B. EXISTING ENTRY STAIR AND GUARDRAIL ASSEMBLIES ARE TO REMAIN IN PLACE. PROTECT DURING CONSTRUCTION.

C. REFER TO EXTERIOR FINISH SCHEDULE FOR FINISH MATERIALS, COLORS, AND TEXTURES.

D. EXISTING DIMENSIONS SHOWN ARE FOR REFERENCE ONLY AND MUST BE VERIFIED IN FIELD.

E. EXISTING VOICE/DATA CABLING SHALL BE FIELD VERIFIED AND INTEGRATED INTO NEW CLADDING ASSEMBLY TO THE GREATEST EXTENT POSSIBLE.

F. NOT ALL APPURTENANCES MAY BE INDICATED. CONTRACTOR TO FIELD VERIFY SIZES, QUANTITIES, LOCATIONS, AND TYPES PRIOR TO COMMENCEMENT OF WORK.

G. PAINT ALL APPURTENANCE BLOCKS AND ASSOCIATED METAL FLASHING TO MATCH ADJACENT SIDING.

H. PAINT ALL ELECTRICAL EQUIPMENT AND ASSOCIATED MOUNTING PANELS AND METAL FLASHING TO MATCH ADJACENT SIDING. MASK OFF AND PROTECT LATCHES, LOCKS, LABELS, TAGS, VIEW PANELS, ETC.

I. PAINT UNDERSIDE OF EAVES AND RAKES TO MATCH ADJACENT SIDING COLOR.

J. PAINT ALL METAL VENT COVERS TO MATCH ADJACENT SIDING. PROTECT AND CLEAN OPERABLE PARTS TO ENSURE PROPER FUNCTION.

K. GUTTERS AND DOWNSPOUTS TO BE PREFINISHED METAL.

L. FASCIA AND BARGE RAFTERS PAINTED TO MATCH GUTTERS AND DOWNSPOUTS.

M. INFORMATION WITHIN EXTERIOR ENTRY NOT SHOWN FOR CLARITY ON OVERALL ELEVATION.

N. NEW GARAGE EXTENSION AND SIDE DOOR ONLY IN SPECIFIC LOCATIONS. REFER TO SITE PLAN.

EXTERIOR FINISH/MATERIALS LEGEND

FC-01	COLOR:	PT-01
	LAP, 8" EXPOSURE	
FC-02	COLOR:	PT-02
	LAP, 5" EXPOSURE	
FC-03	COLOR:	PT-03
	PANEL	
FC-04	COLOR:	PT-04
	PANEL	
FC-05	COLOR:	PT-05
	PANEL	
TR-01	COLOR:	PT-05

NOTE: TR-01 TO BE 12". ALL OTHER TRIM TO BE 4", UON ON ELEVATIONS AND DETAILS.

GLAZED FENESTRATION

ROOF SYSTEM

NEW GUARDRAIL SYSTEM SHOWN DASHED FOR CLARITY

ELEVATION KEY NOTES

1. APPROXIMATE LOCATION OF BUILDING SIGNAGE
2. REMOVE AND REINSTALL EXISTING MOUNTED LIGHT
3. NEW DOWNSPOUT CONNECTED TO EXISTING STORM SYSTEM. UNLESS NOTED OTHERWISE - REFER TO PLANS
4. MECHANICAL PENETRATION AT WALL
5. FIBER CEMENT TRIM - TYPICAL
6. APPROXIMATE LINE OF CONCRETE FOOTING/STEM WALL
7. EXTERIOR ENTRY
8. EXISTING CONDUIT/WIRING TO BE INTEGRATED INTO BUILDING ENCLOSURE
9. EXISTING TELEPHONE/CABLE WIRING TO BE INTEGRATED INTO BUILDING ENCLOSURE
10. EXISTING ROUND LOUVER TO BE REMOVED
11. EXISTING FOUNDATION VENT TO REMAIN
12. DOOR NOT SHOWN FOR CLARITY
13. REMOVE EXISTING LIGHT FIXTURE. INSTALL NEW ENERGY STAR LIGHT FIXTURE IN SAME LOCATION
14. NEW EXTERIOR ENERGY STAR LIGHT FIXTURE AND LAMP

KEY PLAN - N.T.S.

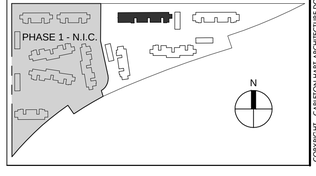

COPYRIGHT - CARLETON HART ARCHITECTURE DO NOT REPRODUCE WITHOUT PERMISSION

REGISTERED ARCHITECT
BRIAN D. CARLETON
PORTLAND, OREGON
2918
STATE OF OREGON

CARLETON HART ARCHITECTURE
322 nw 8th avenue portland, oregon 97209
t 503 243 2252 | f 503 243 3261 | carletonhart.com

PARKWAY VILLAGE : EAST
APARTMENT REHABILITATION
SALEM HOUSING AUTHORITY

PERMIT REVIEW / BID SET

EXTERIOR ELEVATIONS
BUILDING 03

PROJ NO.
21348

01.21.14

A3.02

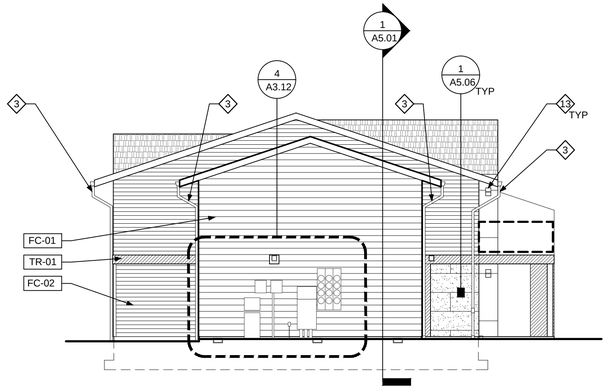

3 BUILDING 04 - WEST ELEVATION
SCALE: 1/8" = 1'-0"

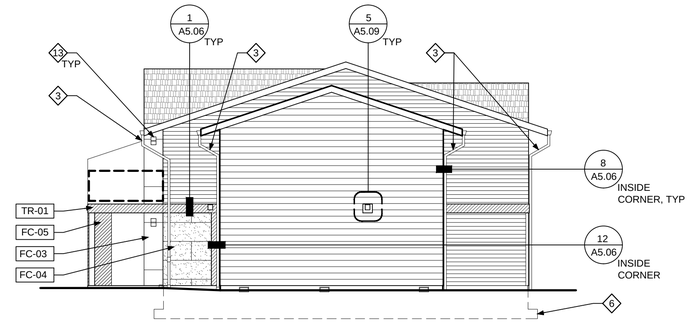

4 BUILDING 04 -EAST ELEVATION
SCALE: 1/8" = 1'-0"

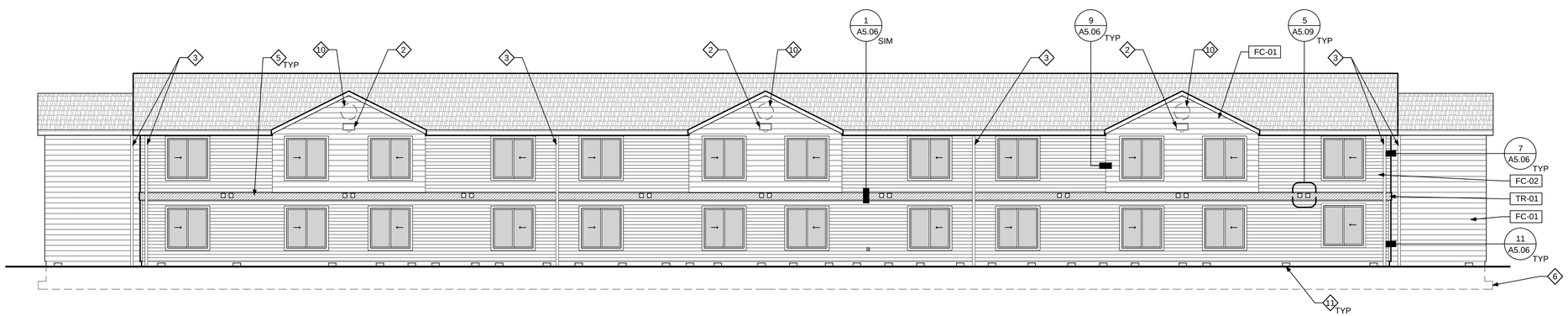

2 BUILDING 04 - NORTH ELEVATION
SCALE: 1/8" = 1'-0"

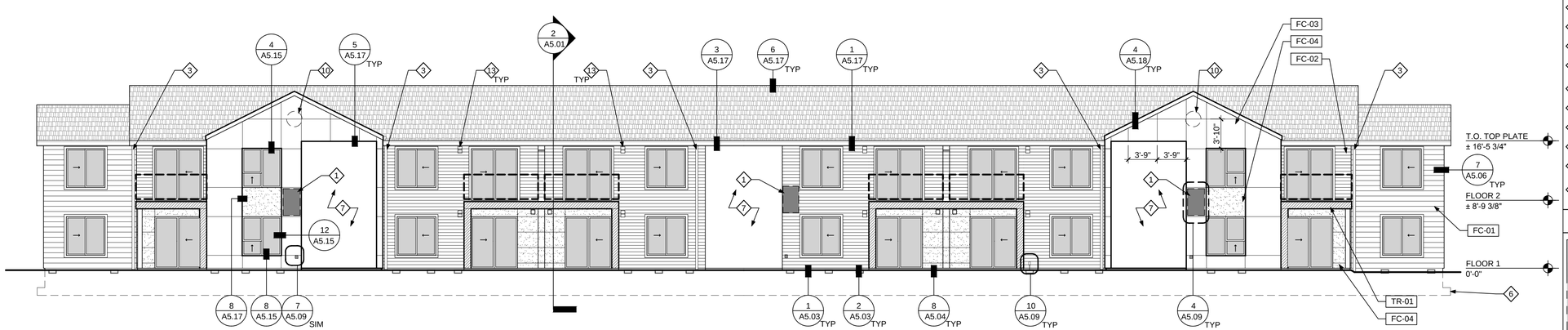

1 BUILDING 04 - SOUTH ELEVATION
SCALE: 1/8" = 1'-0"

GENERAL ELEVATION NOTES

A. ANY OBSERVED, KNOWN, OR VERIFIED CONDITION(S) THAT ARE MATERIAL TO THE PERFORMANCE OF THE WORK DESCRIBED BY THE CONTRACT DOCUMENTS OR OTHERWISE REQUIRE INTERPRETATION SHALL BE PROMPTLY REPORTED TO THE ARCHITECT IN WRITING ON SUCH FORM AS REQUIRED BY THE CONTRACT DOCUMENTS.

B. EXISTING ENTRY STAIR AND GUARDRAIL ASSEMBLIES ARE TO REMAIN IN PLACE. PROTECT DURING CONSTRUCTION.

C. REFER TO EXTERIOR FINISH SCHEDULE FOR FINISH MATERIALS, COLORS, AND TEXTURES.

D. EXISTING DIMENSIONS SHOWN ARE FOR REFERENCE ONLY AND MUST BE VERIFIED IN FIELD.

E. EXISTING VOICE/DATA CABLING SHALL BE FIELD VERIFIED AND INTEGRATED INTO NEW CLADDING ASSEMBLY TO THE GREATEST EXTENT POSSIBLE.

F. NOT ALL APPURTENANCES MAY BE INDICATED. CONTRACTOR TO FIELD VERIFY SIZES, QUANTITIES, LOCATIONS, AND TYPES PRIOR TO COMMENCEMENT OF WORK.

G. PAINT ALL APPURTENANCE BLOCKS AND ASSOCIATED METAL FLASHING TO MATCH ADJACENT SIDING.

H. PAINT ALL ELECTRICAL EQUIPMENT AND ASSOCIATED MOUNTING PANELS AND METAL FLASHING TO MATCH ADJACENT SIDING. MASK OFF AND PROTECT LATCHES, LOCKS, LABELS, TAGS, VIEW PANELS, ETC.

I. PAINT UNDERSIDE OF EAVES AND RAKES TO MATCH ADJACENT SIDING COLOR.

J. PAINT ALL METAL VENT COVERS TO MATCH ADJACENT SIDING. PROTECT AND CLEAN OPERABLE PARTS TO ENSURE PROPER FUNCTION.

K. GUTTERS AND DOWNSPOUTS TO BE PREFINISHED METAL.

L. FASCIA AND BARGE RAFTERS PAINTED TO MATCH GUTTERS AND DOWNSPOUTS.

M. INFORMATION WITHIN EXTERIOR ENTRY NOT SHOWN FOR CLARITY ON OVERALL ELEVATION.

N. NEW GARAGE EXTENSION AND SIDE DOOR ONLY IN SPECIFIC LOCATIONS. REFER TO SITE PLAN.

EXTERIOR FINISH/MATERIALS LEGEND

FC-01	COLOR:	PT-01
	LAP, 8" EXPOSURE	
FC-02	COLOR:	PT-02
	LAP, 5" EXPOSURE	
FC-03	COLOR:	PT-03
	PANEL	
FC-04	COLOR:	PT-04
	PANEL	
FC-05	COLOR:	PT-05
	PANEL	
TR-01	COLOR:	PT-05

NOTE: TR-01 TO BE 12". ALL OTHER TRIM TO BE 4", UON ON ELEVATIONS AND DETAILS.

GLAZED FENESTRATION

ROOF SYSTEM

NEW GUARDRAIL SYSTEM SHOWN DASHED FOR CLARITY

ELEVATION KEY NOTES

1. APPROXIMATE LOCATION OF BUILDING SIGNAGE
2. REMOVE AND REINSTALL EXISTING MOUNTED LIGHT
3. NEW DOWNSPOUT CONNECTED TO EXISTING STORM SYSTEM. UNLESS NOTED OTHERWISE - REFER TO PLANS
4. MECHANICAL PENETRATION AT WALL
5. FIBER CEMENT TRIM - TYPICAL
6. APPROXIMATE LINE OF CONCRETE FOOTING/STEM WALL
7. EXTERIOR ENTRY
8. EXISTING CONDUIT/WIRING TO BE INTEGRATED INTO BUILDING ENCLOSURE
9. EXISTING TELEPHONE/CABLE WIRING TO BE INTEGRATED INTO BUILDING ENCLOSURE
10. EXISTING ROUND LOUVER TO BE REMOVED
11. EXISTING FOUNDATION VENT TO REMAIN
12. DOOR NOT SHOWN FOR CLARITY
13. REMOVE EXISTING LIGHT FIXTURE. INSTALL NEW ENERGY STAR LIGHT FIXTURE IN SAME LOCATION
14. NEW EXTERIOR ENERGY STAR LIGHT FIXTURE AND LAMP

KEY PLAN - N.T.S.

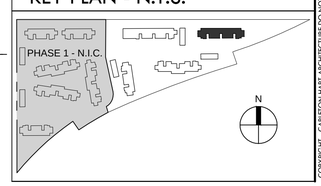

COPYRIGHT - CARLETON HART ARCHITECTURE DO NOT REPRODUCE WITHOUT PERMISSION

REGISTERED ARCHITECT
BRIAN D. CARLETON
PORTLAND, OREGON
2918
STATE OF OREGON

CARLETON HART ARCHITECTURE
322 nw 8th avenue portland, oregon 97209
t 503 243 2252 | f 503 243 3261 | carletonhart.com

PARKWAY VILLAGE : EAST
APARTMENT REHABILITATION
SALEM HOUSING AUTHORITY

PERMIT REVIEW / BID SET

EXTERIOR ELEVATIONS
BUILDING 04

PROJ NO.
21348

01.21.14

A3.11

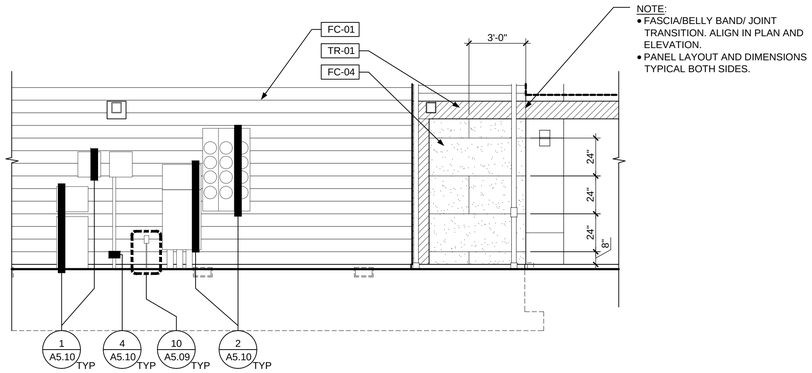

4 BUILDING 04 - ELEVATIONS AT EXISTING METERS
SCALE: 1/4" = 1'-0"

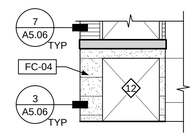

5 INSIDE ELEVATIONS AT DECK A-1
SCALE: 1/8" = 1'-0"

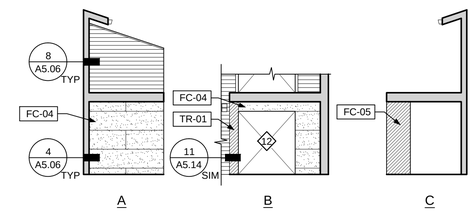

6 INSIDE ELEVATIONS AT DECK B-1
SCALE: 1/8" = 1'-0"

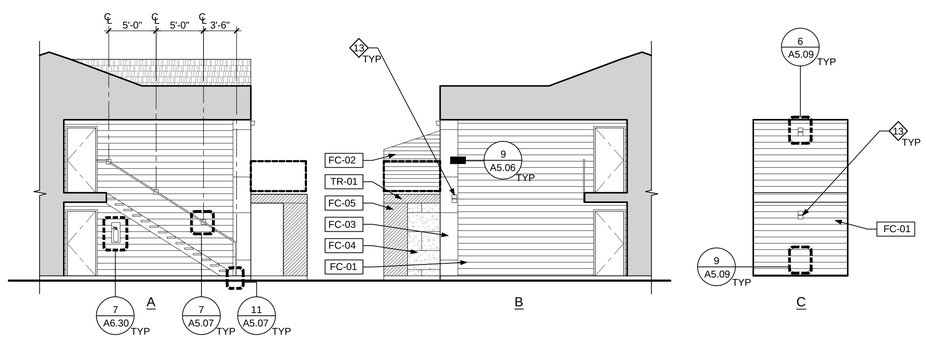

2 BUILDING 04 - ENTRY 1 ELEVATIONS
SCALE: 1/8" = 1'-0"

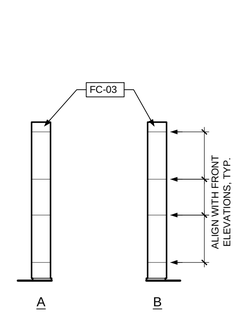

3 BUILDING 04 - WING WALLS
SCALE: 1/8" = 1'-0"

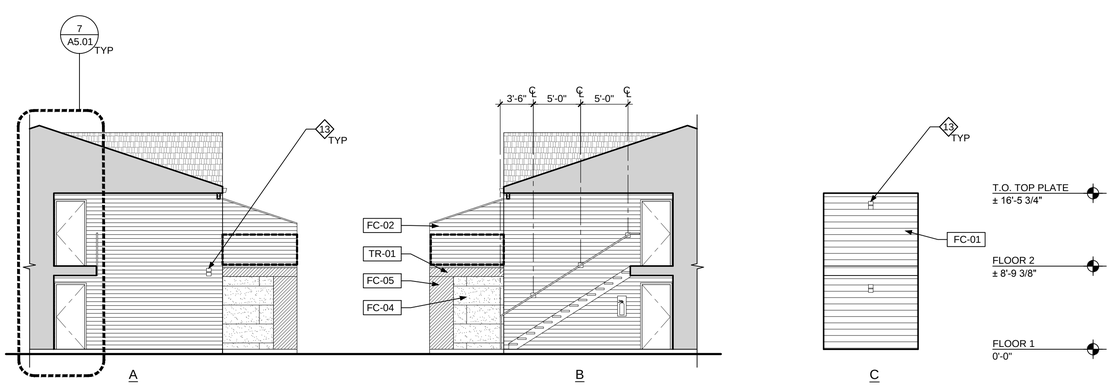

1 BUILDING 04 - MIDDLE ENRTY ELEVATIONS
SCALE: 1/8" = 1'-0"

GENERAL ELEVATION NOTES

A. ANY OBSERVED, KNOWN, OR VERIFIED CONDITION(S) THAT ARE MATERIAL TO THE PERFORMANCE OF THE WORK DESCRIBED BY THE CONTRACT DOCUMENTS OR OTHERWISE REQUIRE INTERPRETATION SHALL BE PROMPTLY REPORTED TO THE ARCHITECT IN WRITING ON SUCH FORM AS REQUIRED BY THE CONTRACT DOCUMENTS.

B. EXISTING ENTRY STAIR AND GUARDRAIL ASSEMBLIES ARE TO REMAIN IN PLACE. PROTECT DURING CONSTRUCTION.

C. REFER TO EXTERIOR FINISH SCHEDULE FOR FINISH MATERIALS, COLORS, AND TEXTURES.

D. EXISTING DIMENSIONS SHOWN ARE FOR REFERENCE ONLY AND MUST BE VERIFIED IN FIELD.

E. EXISTING VOICE/DATA CABLING SHALL BE FIELD VERIFIED AND INTEGRATED INTO NEW CLADDING ASSEMBLY TO THE GREATEST EXTENT POSSIBLE.

F. NOT ALL APPURTENANCES MAY BE INDICATED. CONTRACTOR TO FIELD VERIFY SIZES, QUANTITIES, LOCATIONS, AND TYPES PRIOR TO COMMENCEMENT OF WORK.

G. PAINT ALL APPURTENANCE BLOCKS AND ASSOCIATED METAL FLASHING TO MATCH ADJACENT SIDING.

H. PAINT ALL ELECTRICAL EQUIPMENT AND ASSOCIATED MOUNTING PANELS AND METAL FLASHING TO MATCH ADJACENT SIDING. MASK OFF AND PROTECT LATCHES, LOCKS, LABELS, TAGS, VIEW PANELS, ETC.

I. PAINT UNDERSIDE OF EAVES AND RAKES TO MATCH ADJACENT SIDING COLOR.

J. PAINT ALL METAL VENT COVERS TO MATCH ADJACENT SIDING. PROTECT AND CLEAN OPERABLE PARTS TO ENSURE PROPER FUNCTION.

K. GUTTERS AND DOWNSPOUTS TO BE PREFINISHED METAL.

L. FASCIA AND BARGE RAFTERS PAINTED TO MATCH GUTTERS AND DOWNSPOUTS.

M. INFORMATION WITHIN EXTERIOR ENTRY NOT SHOWN FOR CLARITY ON OVERALL ELEVATION.

N. NEW GARAGE EXTENSION AND SIDE DOOR ONLY IN SPECIFIC LOCATIONS. REFER TO SITE PLAN.

EXTERIOR FINISH/MATERIALS LEGEND

FC-01	COLOR:	PT-01
	LAP, 8" EXPOSURE	
FC-02	COLOR:	PT-02
	LAP, 5" EXPOSURE	
FC-03	COLOR:	PT-03
	PANEL	
FC-04	COLOR:	PT-04
	PANEL	
FC-05	COLOR:	PT-05
	PANEL	
TR-01	COLOR:	PT-05

NOTE: TR-01 TO BE 12", ALL OTHER TRIM TO BE 4", UON ON ELEVATIONS AND DETAILS.

GLAZED FENESTRATION

ROOF SYSTEM

NEW GUARDRAIL SYSTEM SHOWN DASHED FOR CLARITY

ELEVATION KEY NOTES

1. APPROXIMATE LOCATION OF BUILDING SIGNAGE
2. REMOVE AND REINSTALL EXISTING MOUNTED LIGHT
3. NEW DOWNSPOUT CONNECTED TO EXISTING STORM SYSTEM. UNLESS NOTED OTHERWISE - REFER TO PLANS
4. MECHANICAL PENETRATION AT WALL
5. FIBER CEMENT TRIM - TYPICAL
6. APPROXIMATE LINE OF CONCRETE FOOTING/STEM WALL
7. EXTERIOR ENTRY
8. EXISTING CONDUIT/WIRING TO BE INTEGRATED INTO BUILDING ENCLOSURE
9. EXISTING TELEPHONE/CABLE WIRING TO BE INTEGRATED INTO BUILDING ENCLOSURE
10. EXISTING ROUND LOUVER TO BE REMOVED
11. EXISTING FOUNDATION VENT TO REMAIN
12. DOOR NOT SHOWN FOR CLARITY
13. REMOVE EXISTING LIGHT FIXTURE. INSTALL NEW ENERGY STAR LIGHT FIXTURE IN SAME LOCATION
14. NEW EXTERIOR ENERGY STAR LIGHT FIXTURE AND LAMP

KEY PLAN - N.T.S.

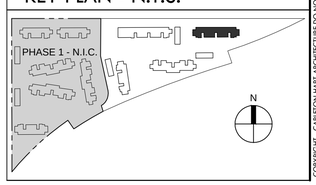

COPYRIGHT - CARLETON HART ARCHITECTURE DO NOT REPRODUCE WITHOUT PERMISSION

REGISTERED ARCHITECT
BRIAN D. CARLETON
PORTLAND, OREGON
2918
STATE OF OREGON

CARLETON HART ARCHITECTURE
322 nw 8th avenue portland, oregon 97209
t 503 243 2252 | f 503 243 3261 | carletonhart.com

PARKWAY VILLAGE : EAST
APARTMENT REHABILITATION
SALEM HOUSING AUTHORITY

PERMIT REVIEW / BID SET

EXTERIOR ELEVATIONS
BUILDING 04

PROJ NO.
21348

01.21.14

A3.12

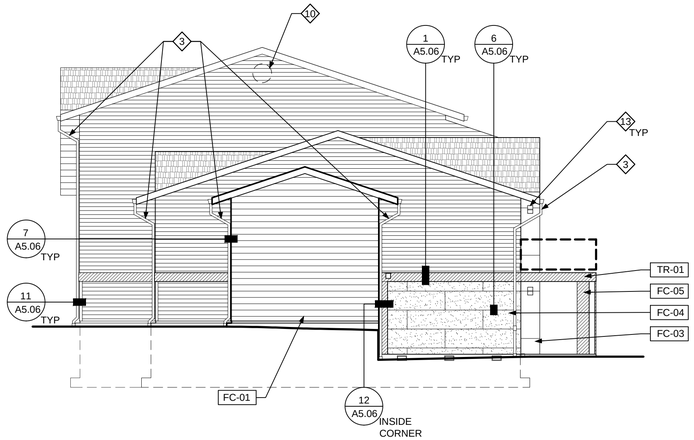

4 BUILDING 05 - EAST ELEVATION
SCALE: 1/8" = 1'-0"

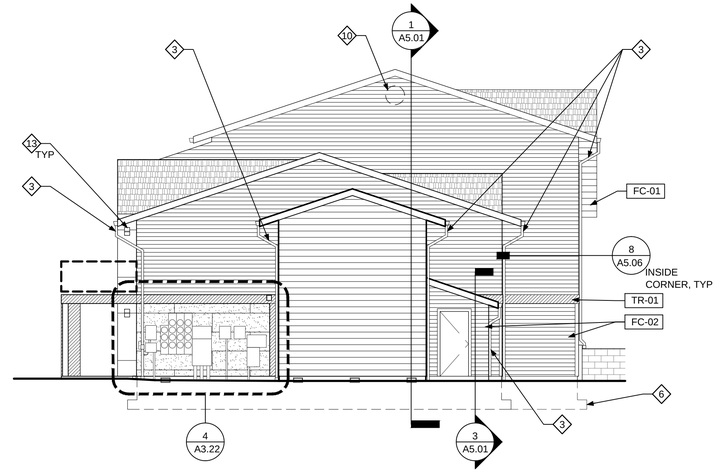

4 BUILDING 05 -WEST ELEVATION
SCALE: 1/8" = 1'-0"

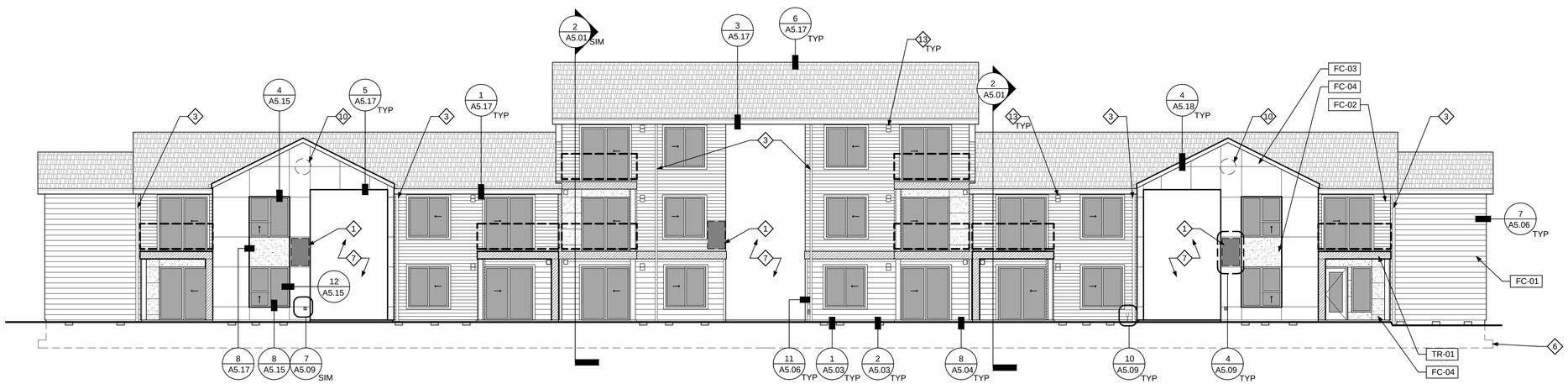

2 BUILDING 05 - NORTH ELEVATION
SCALE: 1/8" = 1'-0"

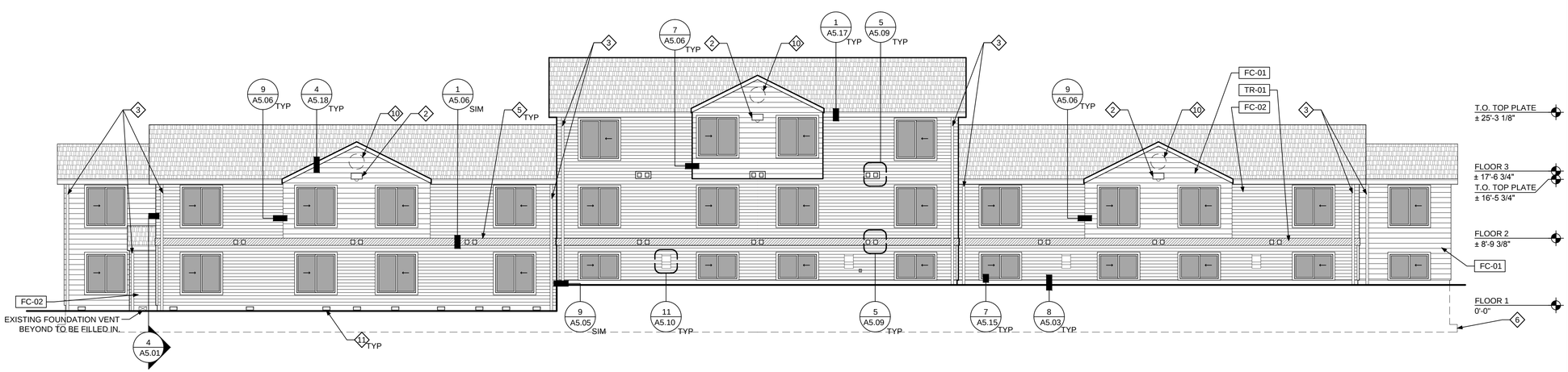

1 BUILDING 05 - SOUTH ELEVATION
SCALE: 1/8" = 1'-0"

GENERAL ELEVATION NOTES

A. ANY OBSERVED, KNOWN, OR VERIFIED CONDITION(S) THAT ARE MATERIAL TO THE PERFORMANCE OF THE WORK DESCRIBED BY THE CONTRACT DOCUMENTS OR OTHERWISE REQUIRE INTERPRETATION SHALL BE PROMPTLY REPORTED TO THE ARCHITECT IN WRITING ON SUCH FORM AS REQUIRED BY THE CONTRACT DOCUMENTS.

B. EXISTING ENTRY STAIR AND GUARDRAIL ASSEMBLIES ARE TO REMAIN IN PLACE. PROTECT DURING CONSTRUCTION.

C. REFER TO EXTERIOR FINISH SCHEDULE FOR FINISH MATERIALS, COLORS, AND TEXTURES.

D. EXISTING DIMENSIONS SHOWN ARE FOR REFERENCE ONLY AND MUST BE VERIFIED IN FIELD.

E. EXISTING VOICE/DATA CABLING SHALL BE FIELD VERIFIED AND INTEGRATED INTO NEW CLADDING ASSEMBLY TO THE GREATEST EXTENT POSSIBLE.

F. NOT ALL APPURTENANCES MAY BE INDICATED. CONTRACTOR TO FIELD VERIFY SIZES, QUANTITIES, LOCATIONS, AND TYPES PRIOR TO COMMENCEMENT OF WORK.

G. PAINT ALL APPURTENANCE BLOCKS AND ASSOCIATED METAL FLASHING TO MATCH ADJACENT SIDING.

H. PAINT ALL ELECTRICAL EQUIPMENT AND ASSOCIATED MOUNTING PANELS AND METAL FLASHING TO MATCH ADJACENT SIDING. MASK OFF AND PROTECT LATCHES, LOCKS, LABELS, TAGS, VIEW PANELS, ETC.

I. PAINT UNDERSIDE OF EAVES AND RAKES TO MATCH ADJACENT SIDING COLOR.

J. PAINT ALL METAL VENT COVERS TO MATCH ADJACENT SIDING. PROTECT AND CLEAN OPERABLE PARTS TO ENSURE PROPER FUNCTION.

K. GUTTERS AND DOWNSPOUTS TO BE PREFINISHED METAL.

L. FASCIA AND BARGE RAFTERS PAINTED TO MATCH GUTTERS AND DOWNSPOUTS.

M. INFORMATION WITHIN EXTERIOR ENTRY NOT SHOWN FOR CLARITY ON OVERALL ELEVATION.

N. NEW GARAGE EXTENSION AND SIDE DOOR ONLY IN SPECIFIC LOCATIONS. REFER TO SITE PLAN.

EXTERIOR FINISH/MATERIALS LEGEND

FC-01	COLOR:	PT-01
	LAP, 8" EXPOSURE	
FC-02	COLOR:	PT-02
	LAP, 5" EXPOSURE	
FC-03	COLOR:	PT-03
	PANEL	
FC-04	COLOR:	PT-04
	PANEL	
FC-05	COLOR:	PT-05
	PANEL	
TR-01	COLOR:	PT-05

NOTE: TR-01 TO BE 12". ALL OTHER TRIM TO BE 4", UON ON ELEVATIONS AND DETAILS.

GLAZED FENESTRATION

ROOF SYSTEM

NEW GUARDRAIL SYSTEM SHOWN DASHED FOR CLARITY

ELEVATION KEY NOTES

1. APPROXIMATE LOCATION OF BUILDING SIGNAGE
2. REMOVE AND REINSTALL EXISTING MOUNTED LIGHT
3. NEW DOWNSPOUT CONNECTED TO EXISTING STORM SYSTEM. UNLESS NOTED OTHERWISE - REFER TO PLANS
4. MECHANICAL PENETRATION AT WALL
5. FIBER CEMENT TRIM - TYPICAL
6. APPROXIMATE LINE OF CONCRETE FOOTING/STEM WALL
7. EXTERIOR ENTRY
8. EXISTING CONDUIT/WIRING TO BE INTEGRATED INTO BUILDING ENCLOSURE
9. EXISTING TELEPHONE/CABLE WIRING TO BE INTEGRATED INTO BUILDING ENCLOSURE
10. EXISTING ROUND LOUVER TO BE REMOVED
11. EXISTING FOUNDATION VENT TO REMAIN
12. DOOR NOT SHOWN FOR CLARITY
13. REMOVE EXISTING LIGHT FIXTURE. INSTALL NEW ENERGY STAR LIGHT FIXTURE IN SAME LOCATION
14. NEW EXTERIOR ENERGY STAR LIGHT FIXTURE AND LAMP

KEY PLAN - N.T.S.

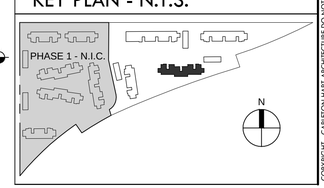

COPYRIGHT - CARLETON HART ARCHITECTURE DO NOT REPRODUCE WITHOUT PERMISSION

REGISTERED ARCHITECT
BRIAN D. CARLETON
PORTLAND, OREGON
2918
STATE OF OREGON

CARLETON HART ARCHITECTURE
322 nw 8th avenue portland, oregon 97209
t 503 243 2252 | f 503 243 3261 | carletonhart.com

PARKWAY VILLAGE : EAST
APARTMENT REHABILITATION
SALEM HOUSING AUTHORITY

PERMIT REVIEW / BID SET

EXTERIOR ELEVATIONS
BUILDING 05

PROJ NO.
21348

01.21.14

A3.21

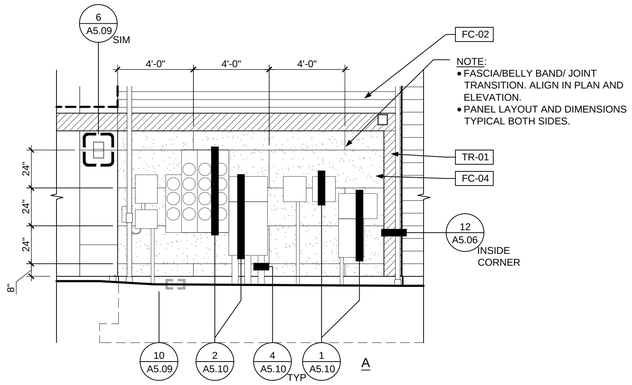

4 BUILDING 05 - ELEVATION AT EXISTING METERS
SCALE: 1/4" = 1'-0"

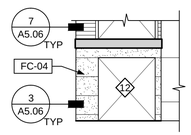

6 INSIDE ELEVATIONS AT DECK A-1
SCALE: 1/8" = 1'-0"

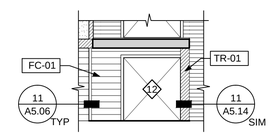

7 INSIDE ELEVATIONS AT DECK C-1
SCALE: 1/8" = 1'-0"

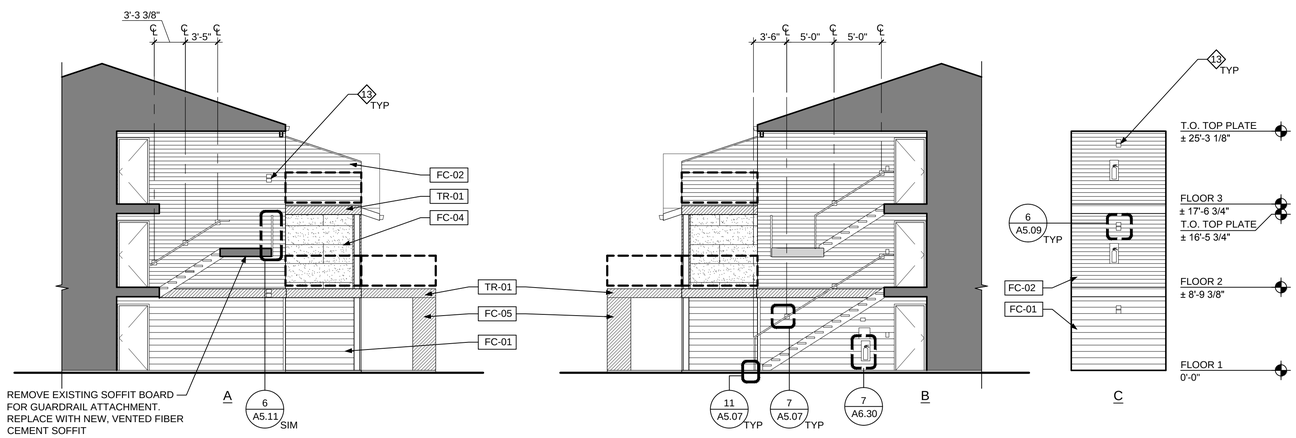

2 BUILDING 05 - MIDDLE ENTRY ELEVATIONS
SCALE: 1/8" = 1'-0"

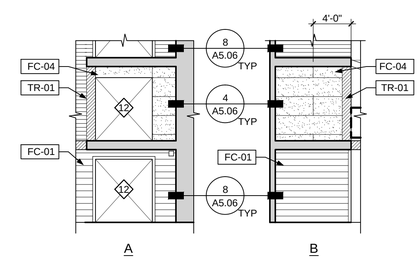

5 INSIDE ELEVATIONS AT DECK D-1
SCALE: 1/8" = 1'-0"

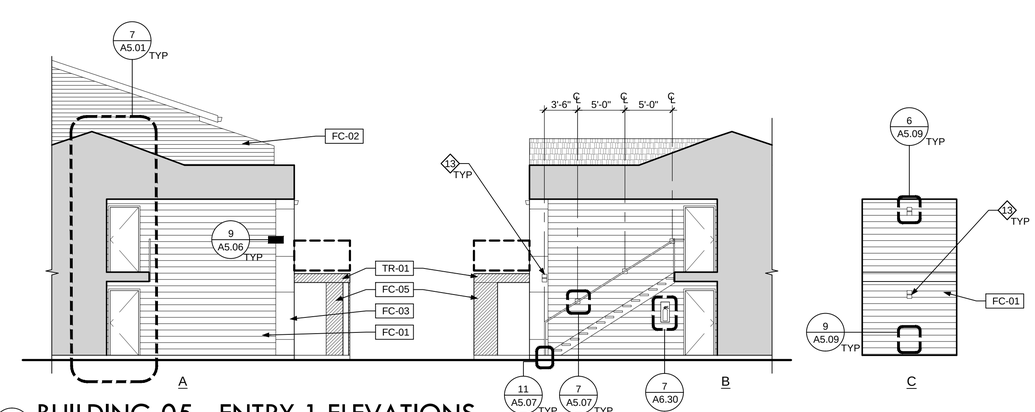

1 BUILDING 05 - ENTRY 1 ELEVATIONS
SCALE: 1/8" = 1'-0"

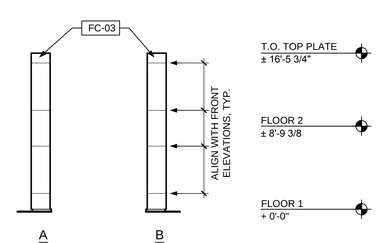

3 BUILDING 05 - WING WALLS
SCALE: 1/8" = 1'-0"

GENERAL ELEVATION NOTES

A. ANY OBSERVED, KNOWN, OR VERIFIED CONDITION(S) THAT ARE MATERIAL TO THE PERFORMANCE OF THE WORK DESCRIBED BY THE CONTRACT DOCUMENTS OR OTHERWISE REQUIRE INTERPRETATION SHALL BE PROMPTLY REPORTED TO THE ARCHITECT IN WRITING ON SUCH FORM AS REQUIRED BY THE CONTRACT DOCUMENTS.

B. EXISTING ENTRY STAIR AND GUARDRAIL ASSEMBLIES ARE TO REMAIN IN PLACE. PROTECT DURING CONSTRUCTION.

C. REFER TO EXTERIOR FINISH SCHEDULE FOR FINISH MATERIALS, COLORS, AND TEXTURES.

D. EXISTING DIMENSIONS SHOWN ARE FOR REFERENCE ONLY AND MUST BE VERIFIED IN FIELD.

E. EXISTING VOICE/DATA CABLING SHALL BE FIELD VERIFIED AND INTEGRATED INTO NEW CLADDING ASSEMBLY TO THE GREATEST EXTENT POSSIBLE.

F. NOT ALL APPURTENANCES MAY BE INDICATED. CONTRACTOR TO FIELD VERIFY SIZES, QUANTITIES, LOCATIONS, AND TYPES PRIOR TO COMMENCEMENT OF WORK.

G. PAINT ALL APPURTENANCE BLOCKS AND ASSOCIATED METAL FLASHING TO MATCH ADJACENT SIDING.

H. PAINT ALL ELECTRICAL EQUIPMENT AND ASSOCIATED MOUNTING PANELS AND METAL FLASHING TO MATCH ADJACENT SIDING. MASK OFF AND PROTECT LATCHES, LOCKS, LABELS, TAGS, VIEW PANELS, ETC.

I. PAINT UNDERSIDE OF EAVES AND RAKES TO MATCH ADJACENT SIDING COLOR.

J. PAINT ALL METAL VENT COVERS TO MATCH ADJACENT SIDING. PROTECT AND CLEAN OPERABLE PARTS TO ENSURE PROPER FUNCTION.

K. GUTTERS AND DOWNSPOUTS TO BE PREFINISHED METAL.

L. FASCIA AND BARGE RAFTERS PAINTED TO MATCH GUTTERS AND DOWNSPOUTS.

M. INFORMATION WITHIN EXTERIOR ENTRY NOT SHOWN FOR CLARITY ON OVERALL ELEVATION.

N. NEW GARAGE EXTENSION AND SIDE DOOR ONLY IN SPECIFIC LOCATIONS. REFER TO SITE PLAN.

EXTERIOR FINISH/MATERIALS LEGEND

FC-01	COLOR:	PT-01
	LAP, 8" EXPOSURE	
FC-02	COLOR:	PT-02
	LAP, 5" EXPOSURE	
FC-03	COLOR:	PT-03
	PANEL	
FC-04	COLOR:	PT-04
	PANEL	
FC-05	COLOR:	PT-05
	PANEL	
TR-01	COLOR:	PT-05

NOTE: TR-01 TO BE 12". ALL OTHER TRIM TO BE 4", UON ON ELEVATIONS AND DETAILS.

GLAZED FENESTRATION

ROOF SYSTEM

NEW GUARDRAIL SYSTEM SHOWN DASHED FOR CLARITY

ELEVATION KEY NOTES

1. APPROXIMATE LOCATION OF BUILDING SIGNAGE
2. REMOVE AND REINSTALL EXISTING MOUNTED LIGHT
3. NEW DOWNSPOUT CONNECTED TO EXISTING STORM SYSTEM. UNLESS NOTED OTHERWISE - REFER TO PLANS
4. MECHANICAL PENETRATION AT WALL
5. FIBER CEMENT TRIM - TYPICAL
6. APPROXIMATE LINE OF CONCRETE FOOTING/STEM WALL
7. EXTERIOR ENTRY
8. EXISTING CONDUIT/WIRING TO BE INTEGRATED INTO BUILDING ENCLOSURE
9. EXISTING TELEPHONE/CABLE WIRING TO BE INTEGRATED INTO BUILDING ENCLOSURE
10. EXISTING ROUND LOUVER TO BE REMOVED
11. EXISTING FOUNDATION VENT TO REMAIN
12. DOOR NOT SHOWN FOR CLARITY
13. REMOVE EXISTING LIGHT FIXTURE. INSTALL NEW ENERGY STAR LIGHT FIXTURE IN SAME LOCATION
14. NEW EXTERIOR ENERGY STAR LIGHT FIXTURE AND LAMP

KEY PLAN - N.T.S.

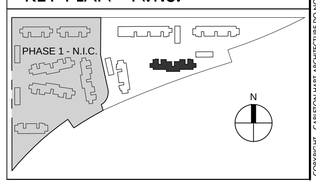

COPYRIGHT - CARLETON HART ARCHITECTURE DO NOT REPRODUCE WITHOUT PERMISSION

REGISTERED ARCHITECT
BRIAN D. CARLETON
PORTLAND, OREGON
2918
STATE OF OREGON

CARLETON HART ARCHITECTURE
322 nw 8th avenue portland, oregon 97209
t 503 243 2252 | f 503 243 3261 | carletonhart.com

PARKWAY VILLAGE : EAST
APARTMENT REHABILITATION
SALEM HOUSING AUTHORITY

PERMIT REVIEW / BID SET

EXTERIOR ELEVATIONS
BUILDING 05

PROJ NO.
21348

01.21.14

A3.22

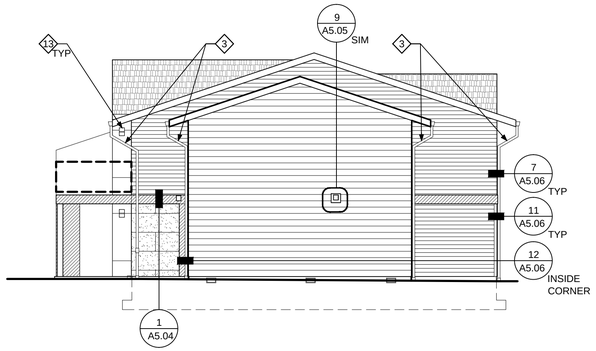

3 BUILDING 06 - NORTH ELEVATION
SCALE: 1/8" = 1'-0"

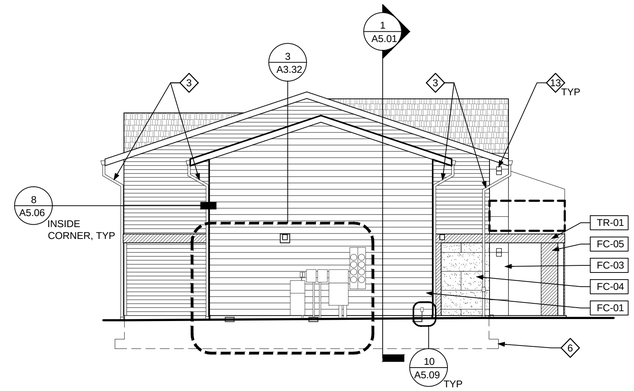

4 BUILDING 06 - SOUTH ELEVATION
SCALE: 1/8" = 1'-0"

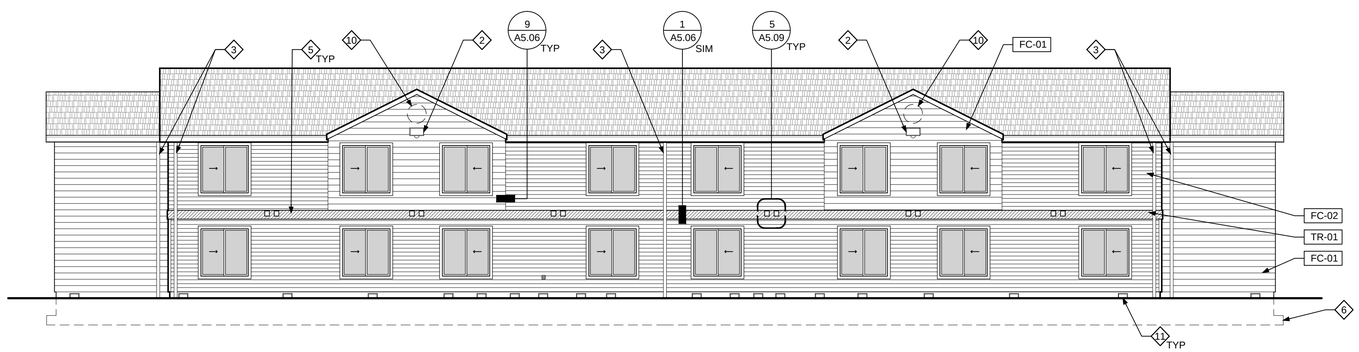

2 BUILDING 06 - EAST ELEVATION
SCALE: 1/8" = 1'-0"

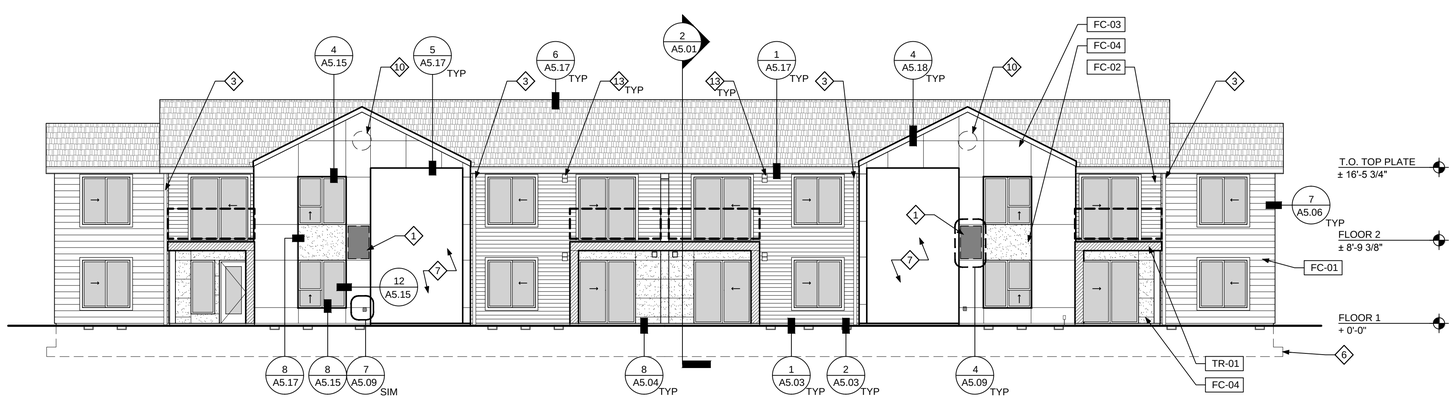

1 BUILDING 06 - WEST ELEVATION
SCALE: 1/8" = 1'-0"

GENERAL ELEVATION NOTES

A. ANY OBSERVED, KNOWN, OR VERIFIED CONDITION(S) THAT ARE MATERIAL TO THE PERFORMANCE OF THE WORK DESCRIBED BY THE CONTRACT DOCUMENTS OR OTHERWISE REQUIRE INTERPRETATION SHALL BE PROMPTLY REPORTED TO THE ARCHITECT IN WRITING ON SUCH FORM AS REQUIRED BY THE CONTRACT DOCUMENTS.

B. EXISTING ENTRY STAIR AND GUARDRAIL ASSEMBLIES ARE TO REMAIN IN PLACE. PROTECT DURING CONSTRUCTION.

C. REFER TO EXTERIOR FINISH SCHEDULE FOR FINISH MATERIALS, COLORS, AND TEXTURES.

D. EXISTING DIMENSIONS SHOWN ARE FOR REFERENCE ONLY AND MUST BE VERIFIED IN FIELD.

E. EXISTING VOICE/DATA CABLING SHALL BE FIELD VERIFIED AND INTEGRATED INTO NEW CLADDING ASSEMBLY TO THE GREATEST EXTENT POSSIBLE.

F. NOT ALL APPURTENANCES MAY BE INDICATED. CONTRACTOR TO FIELD VERIFY SIZES, QUANTITIES, LOCATIONS, AND TYPES PRIOR TO COMMENCEMENT OF WORK.

G. PAINT ALL APPURTENANCE BLOCKS AND ASSOCIATED METAL FLASHING TO MATCH ADJACENT SIDING.

H. PAINT ALL ELECTRICAL EQUIPMENT AND ASSOCIATED MOUNTING PANELS AND METAL FLASHING TO MATCH ADJACENT SIDING. MASK OFF AND PROTECT LATCHES, LOCKS, LABELS, TAGS, VIEW PANELS, ETC.

I. PAINT UNDERSIDE OF EAVES AND RAKES TO MATCH ADJACENT SIDING COLOR.

J. PAINT ALL METAL VENT COVERS TO MATCH ADJACENT SIDING. PROTECT AND CLEAN OPERABLE PARTS TO ENSURE PROPER FUNCTION.

K. GUTTERS AND DOWNSPOUTS TO BE PREFINISHED METAL.

L. FASCIA AND BARGE RAFTERS PAINTED TO MATCH GUTTERS AND DOWNSPOUTS.

M. INFORMATION WITHIN EXTERIOR ENTRY NOT SHOWN FOR CLARITY ON OVERALL ELEVATION.

N. NEW GARAGE EXTENSION AND SIDE DOOR ONLY IN SPECIFIC LOCATIONS. REFER TO SITE PLAN.

EXTERIOR FINISH/MATERIALS LEGEND

	FC-01	COLOR:	PT-01
		LAP, 8" EXPOSURE	
	FC-02	COLOR:	PT-02
		LAP, 5" EXPOSURE	
	FC-03	COLOR:	PT-03
		PANEL	
	FC-04	COLOR:	PT-04
		PANEL	
	FC-05	COLOR:	PT-05
		PANEL	
	TR-01	COLOR:	PT-05

NOTE: TR-01 TO BE 12". ALL OTHER TRIM TO BE 4", UON ON ELEVATIONS AND DETAILS.

GLAZED FENESTRATION

ROOF SYSTEM

NEW GUARDRAIL SYSTEM SHOWN DASHED FOR CLARITY

ELEVATION KEY NOTES

1. APPROXIMATE LOCATION OF BUILDING SIGNAGE
2. REMOVE AND REINSTALL EXISTING MOUNTED LIGHT
3. NEW DOWNSPOUT CONNECTED TO EXISTING STORM SYSTEM. UNLESS NOTED OTHERWISE - REFER TO PLANS
4. MECHANICAL PENETRATION AT WALL
5. FIBER CEMENT TRIM - TYPICAL
6. APPROXIMATE LINE OF CONCRETE FOOTING/STEM WALL
7. EXTERIOR ENTRY
8. EXISTING CONDUIT/WIRING TO BE INTEGRATED INTO BUILDING ENCLOSURE
9. EXISTING TELEPHONE/CABLE WIRING TO BE INTEGRATED INTO BUILDING ENCLOSURE
10. EXISTING ROUND LOUVER TO BE REMOVED
11. EXISTING FOUNDATION VENT TO REMAIN
12. DOOR NOT SHOWN FOR CLARITY
13. REMOVE EXISTING LIGHT FIXTURE. INSTALL NEW ENERGY STAR LIGHT FIXTURE IN SAME LOCATION
14. NEW EXTERIOR ENERGY STAR LIGHT FIXTURE AND LAMP

KEY PLAN - N.T.S.

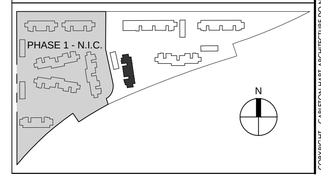

COPYRIGHT - CARLETON HART ARCHITECTURE DO NOT REPRODUCE WITHOUT PERMISSION

REGISTERED ARCHITECT
BRIAN D. CARLETON
PORTLAND, OREGON
2918
STATE OF OREGON

CARLETON HART ARCHITECTURE
322 nw 8th avenue portland, oregon 97209
t 503 243 2252 | f 503 243 3261 | carletonhart.com

PARKWAY VILLAGE : EAST
APARTMENT REHABILITATION
SALEM HOUSING AUTHORITY

PERMIT REVIEW / BID SET

EXTERIOR ELEVATIONS
BUILDING 06

PROJ NO.
21348

01.21.14

A3.31

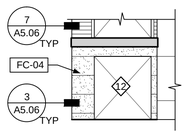

4 INSIDE ELEVATIONS AT DECK A-1
SCALE: 1/4" = 1'-0"

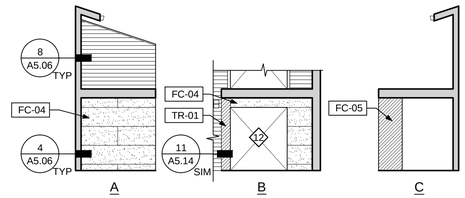

5 INSIDE ELEVATIONS AT DECK B-1
SCALE: 1/4" = 1'-0"

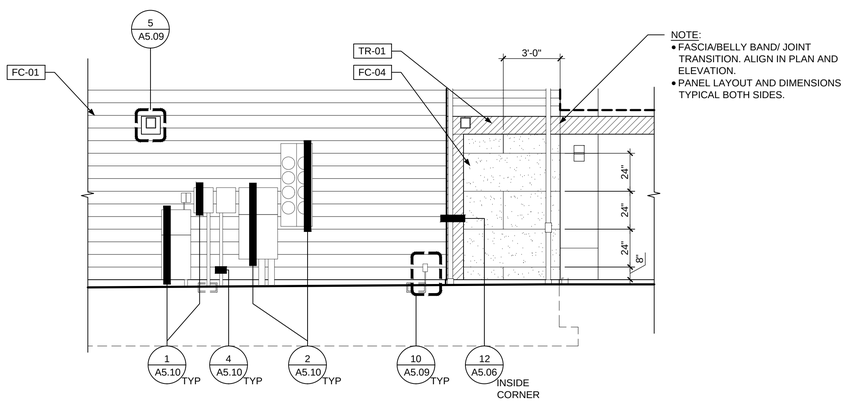

NOTE:
- FASCIA/BELLY BAND/ JOINT TRANSITION. ALIGN IN PLAN AND ELEVATION.
- PANEL LAYOUT AND DIMENSIONS TYPICAL BOTH SIDES.

3 BUILDING 06 - ELEVATION AT EXISTING METERS
SCALE: 1/4" = 1'-0"

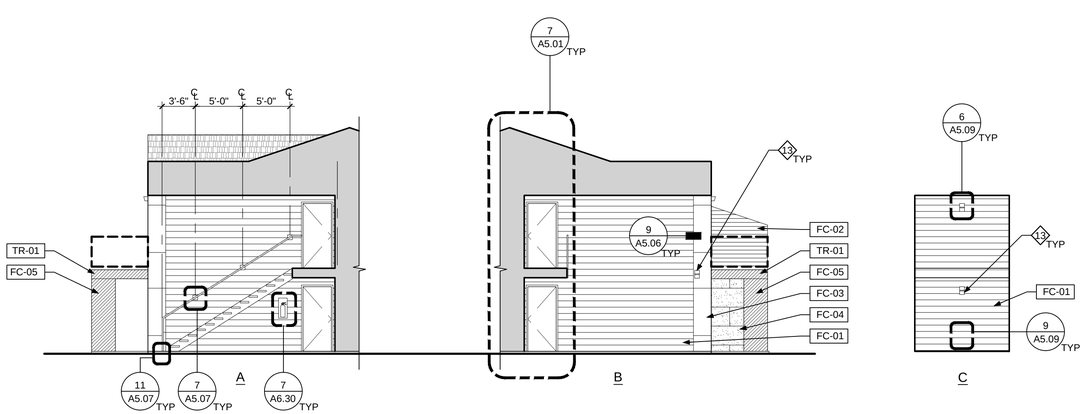

1 BUILDING 06 - ENTRY ELEVATIONS
SCALE: 1/8" = 1'-0"

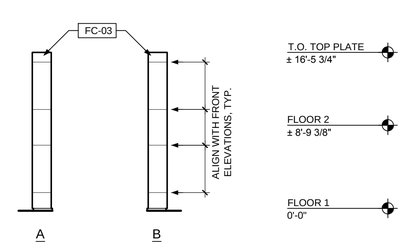

2 BUILDING 06 - WING WALLS
SCALE: 1/8" = 1'-0"

GENERAL ELEVATION NOTES

A. ANY OBSERVED, KNOWN, OR VERIFIED CONDITION(S) THAT ARE MATERIAL TO THE PERFORMANCE OF THE WORK DESCRIBED BY THE CONTRACT DOCUMENTS OR OTHERWISE REQUIRE INTERPRETATION SHALL BE PROMPTLY REPORTED TO THE ARCHITECT IN WRITING ON SUCH FORM AS REQUIRED BY THE CONTRACT DOCUMENTS.

B. EXISTING ENTRY STAIR AND GUARDRAIL ASSEMBLIES ARE TO REMAIN IN PLACE. PROTECT DURING CONSTRUCTION.

C. REFER TO EXTERIOR FINISH SCHEDULE FOR FINISH MATERIALS, COLORS, AND TEXTURES.

D. EXISTING DIMENSIONS SHOWN ARE FOR REFERENCE ONLY AND MUST BE VERIFIED IN FIELD.

E. EXISTING VOICE/DATA CABLING SHALL BE FIELD VERIFIED AND INTEGRATED INTO NEW CLADDING ASSEMBLY TO THE GREATEST EXTENT POSSIBLE.

F. NOT ALL APPURTENANCES MAY BE INDICATED. CONTRACTOR TO FIELD VERIFY SIZES, QUANTITIES, LOCATIONS, AND TYPES PRIOR TO COMMENCEMENT OF WORK.

G. PAINT ALL APPURTENANCE BLOCKS AND ASSOCIATED METAL FLASHING TO MATCH ADJACENT SIDING.

H. PAINT ALL ELECTRICAL EQUIPMENT AND ASSOCIATED MOUNTING PANELS AND METAL FLASHING TO MATCH ADJACENT SIDING. MASK OFF AND PROTECT LATCHES, LOCKS, LABELS, TAGS, VIEW PANELS, ETC.

I. PAINT UNDERSIDE OF EAVES AND RAKES TO MATCH ADJACENT SIDING COLOR.

J. PAINT ALL METAL VENT COVERS TO MATCH ADJACENT SIDING. PROTECT AND CLEAN OPERABLE PARTS TO ENSURE PROPER FUNCTION.

K. GUTTERS AND DOWNSPOUTS TO BE PREFINISHED METAL.

L. FASCIA AND BARGE RAFTERS PAINTED TO MATCH GUTTERS AND DOWNSPOUTS.

M. INFORMATION WITHIN EXTERIOR ENTRY NOT SHOWN FOR CLARITY ON OVERALL ELEVATION.

N. NEW GARAGE EXTENSION AND SIDE DOOR ONLY IN SPECIFIC LOCATIONS. REFER TO SITE PLAN.

EXTERIOR FINISH/MATERIALS LEGEND

FC-01	COLOR:	PT-01
	LAP, 8" EXPOSURE	
FC-02	COLOR:	PT-02
	LAP, 5" EXPOSURE	
FC-03	COLOR:	PT-03
	PANEL	
FC-04	COLOR:	PT-04
	PANEL	
FC-05	COLOR:	PT-05
	PANEL	
TR-01	COLOR:	PT-05

NOTE: TR-01 TO BE 12". ALL OTHER TRIM TO BE 4", UON ON ELEVATIONS AND DETAILS.

GLAZED FENESTRATION

ROOF SYSTEM

NEW GUARDRAIL SYSTEM SHOWN DASHED FOR CLARITY

ELEVATION KEY NOTES

1. APPROXIMATE LOCATION OF BUILDING SIGNAGE
2. REMOVE AND REINSTALL EXISTING MOUNTED LIGHT
3. NEW DOWNSPOUT CONNECTED TO EXISTING STORM SYSTEM. UNLESS NOTED OTHERWISE - REFER TO PLANS
4. MECHANICAL PENETRATION AT WALL
5. FIBER CEMENT TRIM - TYPICAL
6. APPROXIMATE LINE OF CONCRETE FOOTING/STEM WALL
7. EXTERIOR ENTRY
8. EXISTING CONDUIT/WIRING TO BE INTEGRATED INTO BUILDING ENCLOSURE
9. EXISTING TELEPHONE/CABLE WIRING TO BE INTEGRATED INTO BUILDING ENCLOSURE
10. EXISTING ROUND LOUVER TO BE REMOVED
11. EXISTING FOUNDATION VENT TO REMAIN
12. DOOR NOT SHOWN FOR CLARITY
13. REMOVE EXISTING LIGHT FIXTURE. INSTALL NEW ENERGY STAR LIGHT FIXTURE IN SAME LOCATION
14. NEW EXTERIOR ENERGY STAR LIGHT FIXTURE AND LAMP

KEY PLAN - N.T.S.

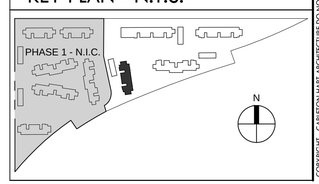

COPYRIGHT - CARLETON HART ARCHITECTURE DO NOT REPRODUCE WITHOUT PERMISSION

REGISTERED ARCHITECT
BRIAN D. CARLETON
PORTLAND, OREGON
2918
STATE OF OREGON

CARLETON HART ARCHITECTURE
322 nw 8th avenue portland, oregon 97209
t 503 243 2252 | f 503 243 3261 | carletonhart.com

PARKWAY VILLAGE : EAST
APARTMENT REHABILITATION
SALEM HOUSING AUTHORITY

PERMIT REVIEW / BID SET

EXTERIOR ELEVATIONS
BUILDING 06

PROJ NO.
21348

01.21.14

A3.32

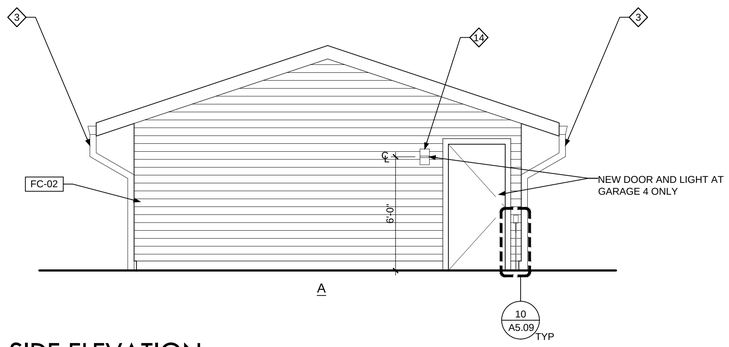

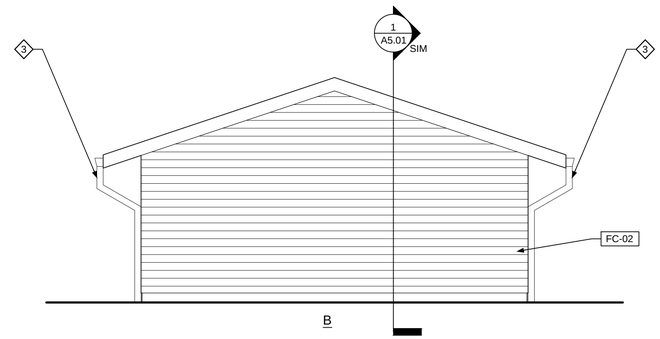

3 GARAGE SIDE ELEVATION

SCALE: 1/4" = 1'-0"

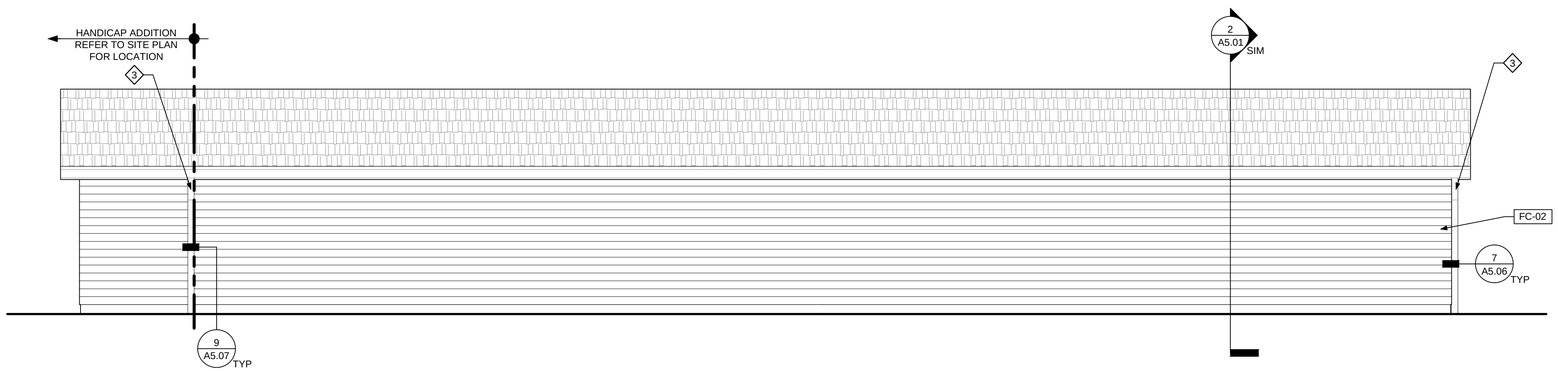

2 GARAGE BACK ELEVATION

SCALE: 1/4" = 1'-0"

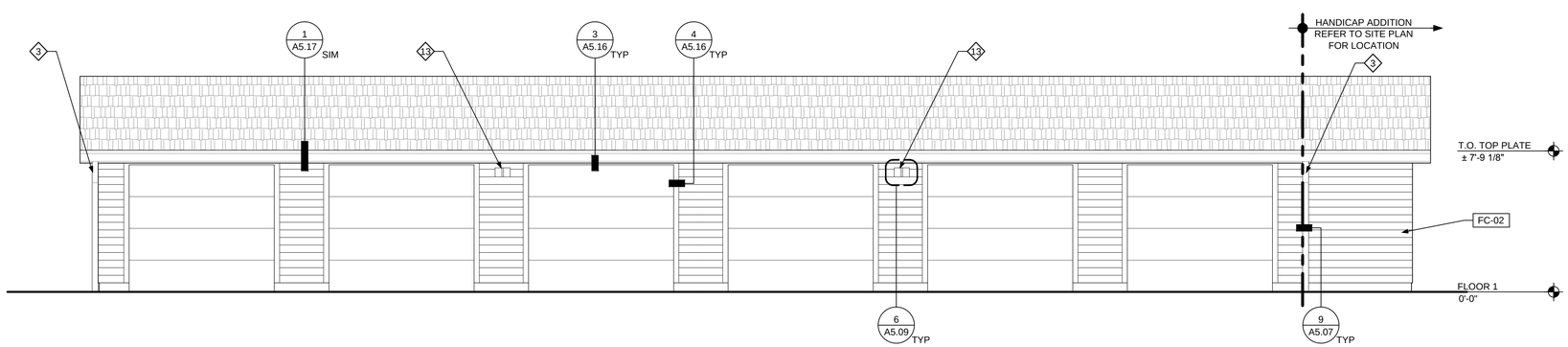

1 GARAGE FRONT ELEVATION

SCALE: 1/4" = 1'-0"

GENERAL ELEVATION NOTES

A. ANY OBSERVED, KNOWN, OR VERIFIED CONDITION(S) THAT ARE MATERIAL TO THE PERFORMANCE OF THE WORK DESCRIBED BY THE CONTRACT DOCUMENTS OR OTHERWISE REQUIRE INTERPRETATION SHALL BE PROMPTLY REPORTED TO THE ARCHITECT IN WRITING ON SUCH FORM AS REQUIRED BY THE CONTRACT DOCUMENTS.

B. EXISTING ENTRY STAIR AND GUARDRAIL ASSEMBLIES ARE TO REMAIN IN PLACE. PROTECT DURING CONSTRUCTION.

C. REFER TO EXTERIOR FINISH SCHEDULE FOR FINISH MATERIALS, COLORS, AND TEXTURES.

D. EXISTING DIMENSIONS SHOWN ARE FOR REFERENCE ONLY AND MUST BE VERIFIED IN FIELD.

E. EXISTING VOICE/DATA CABLING SHALL BE FIELD VERIFIED AND INTEGRATED INTO NEW CLADDING ASSEMBLY TO THE GREATEST EXTENT POSSIBLE.

F. NOT ALL APPURTENANCES MAY BE INDICATED. CONTRACTOR TO FIELD VERIFY SIZES, QUANTITIES, LOCATIONS, AND TYPES PRIOR TO COMMENCEMENT OF WORK.

G. PAINT ALL APPURTENANCE BLOCKS AND ASSOCIATED METAL FLASHING TO MATCH ADJACENT SIDING.

H. PAINT ALL ELECTRICAL EQUIPMENT AND ASSOCIATED MOUNTING PANELS AND METAL FLASHING TO MATCH ADJACENT SIDING. MASK OFF AND PROTECT LATCHES, LOCKS, LABELS, TAGS, VIEW PANELS, ETC.

I. PAINT UNDERSIDE OF EAVES AND RAKES TO MATCH ADJACENT SIDING COLOR.

J. PAINT ALL METAL VENT COVERS TO MATCH ADJACENT SIDING. PROTECT AND CLEAN OPERABLE PARTS TO ENSURE PROPER FUNCTION.

K. GUTTERS AND DOWNSPOUTS TO BE PREFINISHED METAL.

L. FASCIA AND BARGE RAFTERS PAINTED TO MATCH GUTTERS AND DOWNSPOUTS.

M. INFORMATION WITHIN EXTERIOR ENTRY NOT SHOWN FOR CLARITY ON OVERALL ELEVATION.

N. NEW GARAGE EXTENSION AND SIDE DOOR ONLY IN SPECIFIC LOCATIONS. REFER TO SITE PLAN.

EXTERIOR FINISH/MATERIALS LEGEND

	FC-01	COLOR:	PT-01
		LAP, 8" EXPOSURE	
	FC-02	COLOR:	PT-02
		LAP, 5" EXPOSURE	
	FC-03	COLOR:	PT-03
		PANEL	
	FC-04	COLOR:	PT-04
		PANEL	
	FC-05	COLOR:	PT-05
		PANEL	
	TR-01	COLOR:	PT-05

NOTE: TR-01 TO BE 12". ALL OTHER TRIM TO BE 4", UON ON ELEVATIONS AND DETAILS.

GLAZED FENESTRATION

ROOF SYSTEM

NEW GUARDRAIL SYSTEM
SHOWN DASHED FOR CLARITY

ELEVATION KEY NOTES

1. APPROXIMATE LOCATION OF BUILDING SIGNAGE
2. REMOVE AND REINSTALL EXISTING MOUNTED LIGHT
3. NEW DOWNSPOUT CONNECTED TO EXISTING STORM SYSTEM. UNLESS NOTED OTHERWISE - REFER TO PLANS
4. MECHANICAL PENETRATION AT WALL
5. FIBER CEMENT TRIM - TYPICAL
6. APPROXIMATE LINE OF CONCRETE FOOTING/STEM WALL
7. EXTERIOR ENTRY
8. EXISTING CONDUIT/WIRING TO BE INTEGRATED INTO BUILDING ENCLOSURE
9. EXISTING TELEPHONE/CABLE WIRING TO BE INTEGRATED INTO BUILDING ENCLOSURE
10. EXISTING ROUND LOUVER TO BE REMOVED
11. EXISTING FOUNDATION VENT TO REMAIN
12. DOOR NOT SHOWN FOR CLARITY
13. REMOVE EXISTING LIGHT FIXTURE. INSTALL NEW ENERGY STAR LIGHT FIXTURE IN SAME LOCATION
14. NEW EXTERIOR ENERGY STAR LIGHT FIXTURE AND LAMP

KEY PLAN - N.T.S.

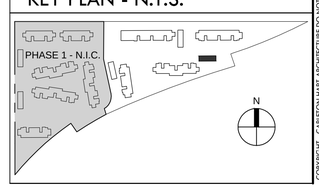

COPYRIGHT - CARLETON HART ARCHITECTURE DO NOT REPRODUCE WITHOUT PERMISSION

CARLETON HART ARCHITECTURE
322 nw 8th avenue portland, oregon 97209
t 503 243 2252 | f 503 243 3261 | carletonhart.com

PARKWAY VILLAGE : EAST
APARTMENT REHABILITATION
SALEM HOUSING AUTHORITY

PERMIT REVIEW / BID SET

EXTERIOR ELEVATIONS
GARAGE

PROJ NO.
21348

01.21.14

A3.41

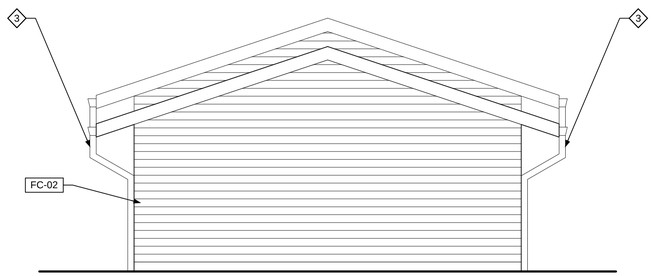

A

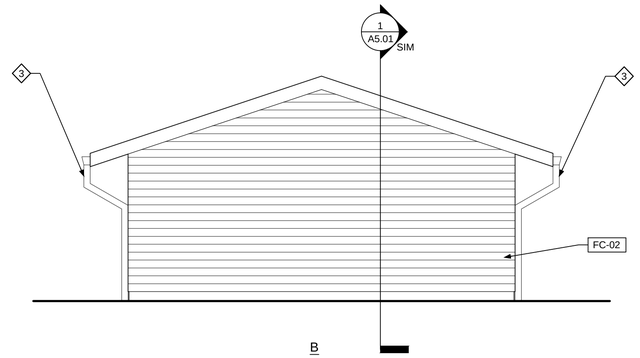

B

3 GARAGE SIDE ELEVATION

SCALE: 1/4" = 1'-0"

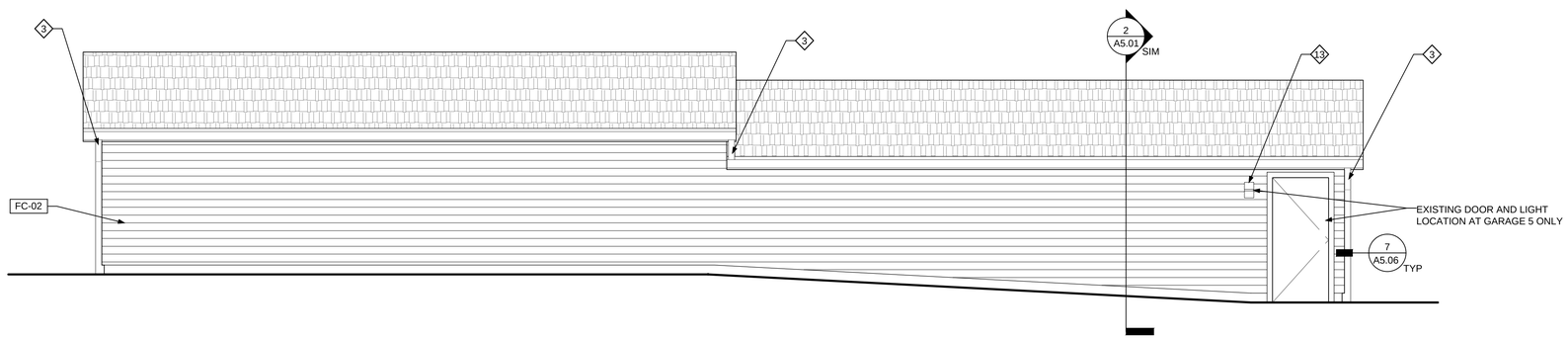

2 GARAGE BACK ELEVATION

SCALE: 1/4" = 1'-0"

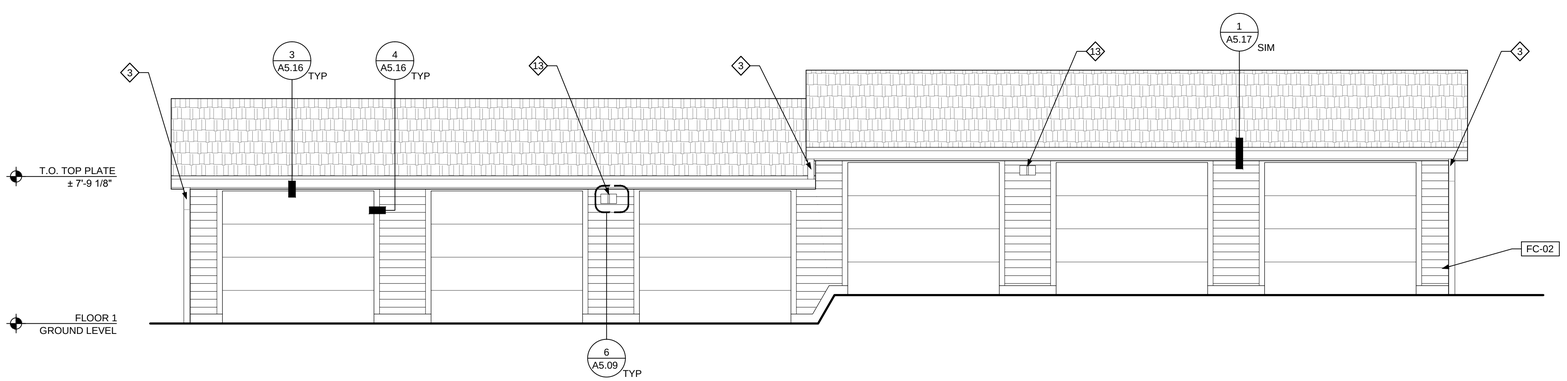

1 GARAGE FRONT ELEVATION

SCALE: 1/4" = 1'-0"

GENERAL ELEVATION NOTES

A. ANY OBSERVED, KNOWN, OR VERIFIED CONDITION(S) THAT ARE MATERIAL TO THE PERFORMANCE OF THE WORK DESCRIBED BY THE CONTRACT DOCUMENTS OR OTHERWISE REQUIRE INTERPRETATION SHALL BE PROMPTLY REPORTED TO THE ARCHITECT IN WRITING ON SUCH FORM AS REQUIRED BY THE CONTRACT DOCUMENTS.

B. EXISTING ENTRY STAIR AND GUARDRAIL ASSEMBLIES ARE TO REMAIN IN PLACE. PROTECT DURING CONSTRUCTION.

C. REFER TO EXTERIOR FINISH SCHEDULE FOR FINISH MATERIALS, COLORS, AND TEXTURES.

D. EXISTING DIMENSIONS SHOWN ARE FOR REFERENCE ONLY AND MUST BE VERIFIED IN FIELD.

E. EXISTING VOICE/DATA CABLING SHALL BE FIELD VERIFIED AND INTEGRATED INTO NEW CLADDING ASSEMBLY TO THE GREATEST EXTENT POSSIBLE.

F. NOT ALL APPURTENANCES MAY BE INDICATED. CONTRACTOR TO FIELD VERIFY SIZES, QUANTITIES, LOCATIONS, AND TYPES PRIOR TO COMMENCEMENT OF WORK.

G. PAINT ALL APPURTENANCE BLOCKS AND ASSOCIATED METAL FLASHING TO MATCH ADJACENT SIDING.

H. PAINT ALL ELECTRICAL EQUIPMENT AND ASSOCIATED MOUNTING PANELS AND METAL FLASHING TO MATCH ADJACENT SIDING. MASK OFF AND PROTECT LATCHES, LOCKS, LABELS, TAGS, VIEW PANELS, ETC.

I. PAINT UNDERSIDE OF EAVES AND RAKES TO MATCH ADJACENT SIDING COLOR.

J. PAINT ALL METAL VENT COVERS TO MATCH ADJACENT SIDING. PROTECT AND CLEAN OPERABLE PARTS TO ENSURE PROPER FUNCTION.

K. GUTTERS AND DOWNSPOUTS TO BE PREFINISHED METAL.

L. FASCIA AND BARGE RAFTERS PAINTED TO MATCH GUTTERS AND DOWNSPOUTS.

M. INFORMATION WITHIN EXTERIOR ENTRY NOT SHOWN FOR CLARITY ON OVERALL ELEVATION.

N. NEW GARAGE EXTENSION AND SIDE DOOR ONLY IN SPECIFIC LOCATIONS. REFER TO SITE PLAN.

EXTERIOR FINISH/MATERIALS LEGEND

	FC-01	COLOR:	PT-01
		LAP, 8" EXPOSURE	
	FC-02	COLOR:	PT-02
		LAP, 5" EXPOSURE	
	FC-03	COLOR:	PT-03
		PANEL	
	FC-04	COLOR:	PT-04
		PANEL	
	FC-05	COLOR:	PT-05
		PANEL	
	TR-01	COLOR:	PT-05

NOTE: TR-01 TO BE 12". ALL OTHER TRIM TO BE 4", UON ON ELEVATIONS AND DETAILS.

GLAZED FENESTRATION

ROOF SYSTEM

NEW GUARDRAIL SYSTEM SHOWN DASHED FOR CLARITY

ELEVATION KEY NOTES

1. APPROXIMATE LOCATION OF BUILDING SIGNAGE
2. REMOVE AND REINSTALL EXISTING MOUNTED LIGHT
3. NEW DOWNSPOUT CONNECTED TO EXISTING STORM SYSTEM. UNLESS NOTED OTHERWISE - REFER TO PLANS
4. MECHANICAL PENETRATION AT WALL
5. FIBER CEMENT TRIM - TYPICAL
6. APPROXIMATE LINE OF CONCRETE FOOTING/STEM WALL
7. EXTERIOR ENTRY
8. EXISTING CONDUIT/WIRING TO BE INTEGRATED INTO BUILDING ENCLOSURE
9. EXISTING TELEPHONE/CABLE WIRING TO BE INTEGRATED INTO BUILDING ENCLOSURE
10. EXISTING ROUND LOUVER TO BE REMOVED
11. EXISTING FOUNDATION VENT TO REMAIN
12. DOOR NOT SHOWN FOR CLARITY
13. REMOVE EXISTING LIGHT FIXTURE. INSTALL NEW ENERGY STAR LIGHT FIXTURE IN SAME LOCATION
14. NEW EXTERIOR ENERGY STAR LIGHT FIXTURE AND LAMP

KEY PLAN - N.T.S.

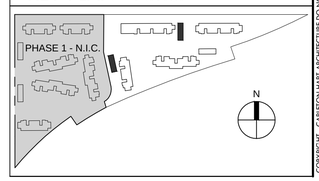

COPYRIGHT - CARLETON HART ARCHITECTURE DO NOT REPRODUCE WITHOUT PERMISSION

CARLETON HART ARCHITECTURE
322 nw 8th avenue portland, oregon 97209
t 503 243 2252 | f 503 243 3261 | carletonhart.com

PARKWAY VILLAGE : EAST
APARTMENT REHABILITATION
SALEM HOUSING AUTHORITY

PERMIT REVIEW / BID SET

EXTERIOR ELEVATIONS
GARAGE

PROJ NO.
21348

01.21.14

A3.42

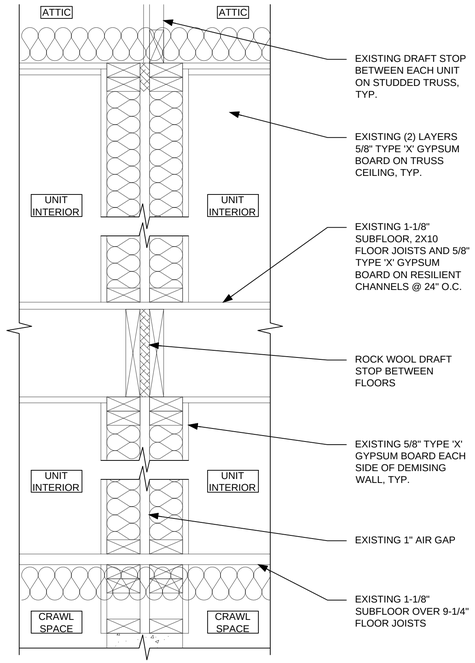

TYPICAL WALL SECTION - EXISTING 1-HOUR SEPARATION WALL

5 SCALE: 1 1/2" = 1'-0"

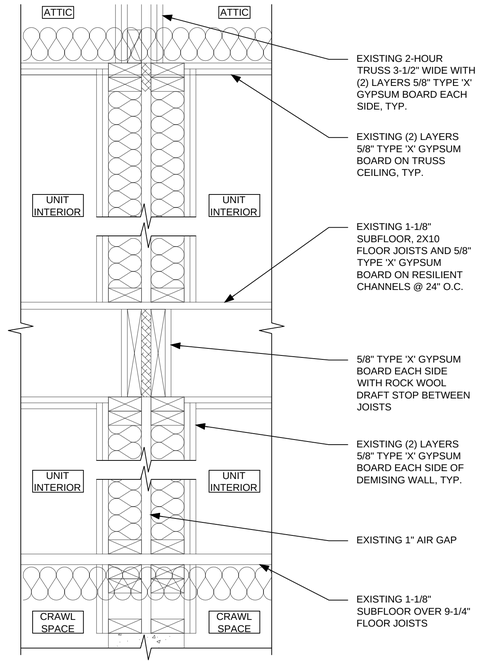

TYPICAL WALL SECTION - EXISTING 2-HOUR SEPARATION WALL

6 SCALE: 1 1/2" = 1'-0"

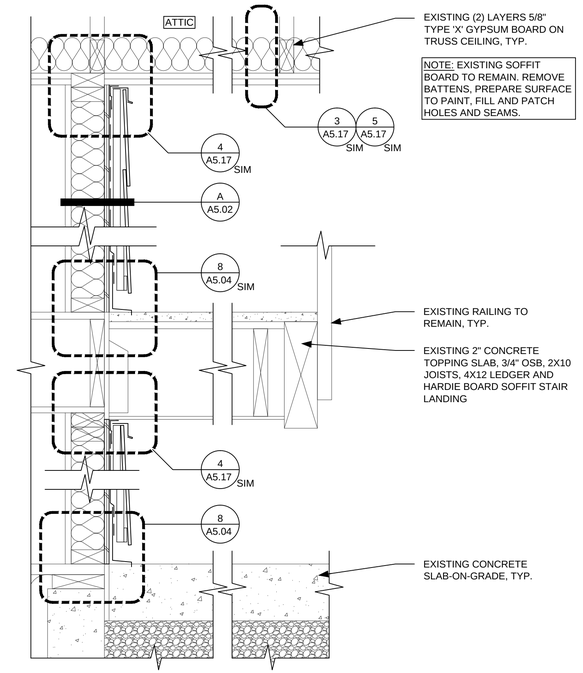

TYPICAL WALL SECTION - EXISTING 2-HOUR SEPARATION WALL

7 SCALE: 1 1/2" = 1'-0"

GENERAL NOTES

EXISTING BUILDING ENCLOSURE ASSEMBLY NOTES:

A. FIRE RESISTIVE ASSEMBLY REFERENCES:
- 2010 OREGON STRUCTURAL SPECIALITY CODE (OSSC)
- GYPSUM ASSOCIATION FIRE RESISTANCE DESIGN MANUAL (GA-600-2012, 20TH EDITION.
- UNDERWRITERS LABORATORY (UL) FIRE RESISTANCE DIRECTORIES.

B. ALL EXISTING TYPE VA ASSEMBLIES INDICATED BELOW ARE BASED UPON THE 2010 OREGON STRUCTURAL SPECIALTY CODE (OSSC), CHAPTER 6 - TYPES OF CONSTRUCTION AND CHAPTER 7 - FIRE AND SMOKE PROTECTION FEATURES.
1-HOUR FIRE RESISTIVE CONSTRUCTION (TABLE 601):
- PRIMARY STRUCTURAL FRAME
- BEARING WALLS - INTERIOR AND EXTERIOR
- FLOOR CONSTRUCTION AND SECONDARY MEMBERS
- ROOF CONSTRUCTION AND SECONDARY MEMBERS

C. LISTED FIRE RESISTIVE ASSEMBLIES ARE CALCULATED USING PRESCRIPTIVE PATH AS IDENTIFIED UNDER CHAPTER 7, SECTION 721.

D. NEW BUILDING ELEMENTS AND SYSTEMS INCORPORATED INTO AN EXISTING ASSEMBLY SHALL MEET THE FIRE RESISTIVE CONSTRUCTION INDICATED ON DRAWINGS.

E. REFER TO BUILDING ASSEMBLY DETAILS FOR ADDITIONAL AND SPECIFIC FIRE RESISTIVE CONSTRUCTION INFORMATION.

GENERAL WALL SECTION NOTES:

A. ANY OBSERVED, KNOWN, OR VERIFIED CONDITION(S) THAT MAY IMPEDE OR ALTER WORK DESCRIBED BY THE CONTRACT DOCUMENTS OR OTHERWISE REQUIRE INTERPRETATION SHALL BE PROMPTLY REPORTED TO THE ARCHITECT IN WRITING ON SUCH FORM AS REQUIRED BY THE CONTRACT DOCUMENTS.

B. ASSEMBLY COMPONENTS SHOWN REFLECT THE MAJOR CONSTRUCTION MATERIALS, ADDITIONAL AND ALTERNATE MATERIALS MAY BE INDICATED ON REFERENCED ASSEMBLIES AND DETAILS.

C. REFER TO "EXTERIOR ELEVATIONS" FOR ADDITIONAL INFORMATION AND COORDINATION FOR SIDING STYLE, LAYOUT, AND PATTERNS.

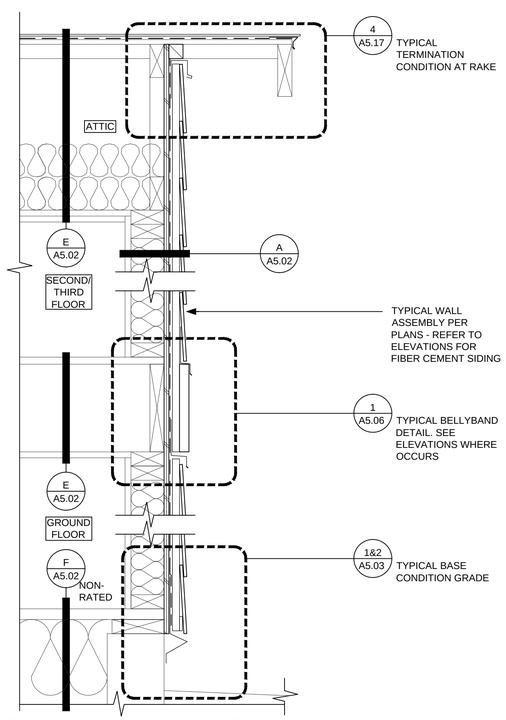

TYPICAL WALL SECTION - EXISTING GABLE

1 SCALE: 1 1/2" = 1'-0"

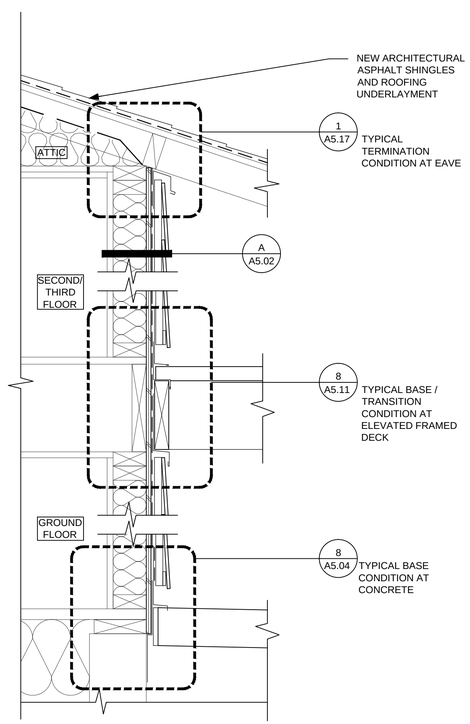

TYPICAL WALL SECTION - EXISTING EAVE

2 SCALE: 1 1/2" = 1'-0"

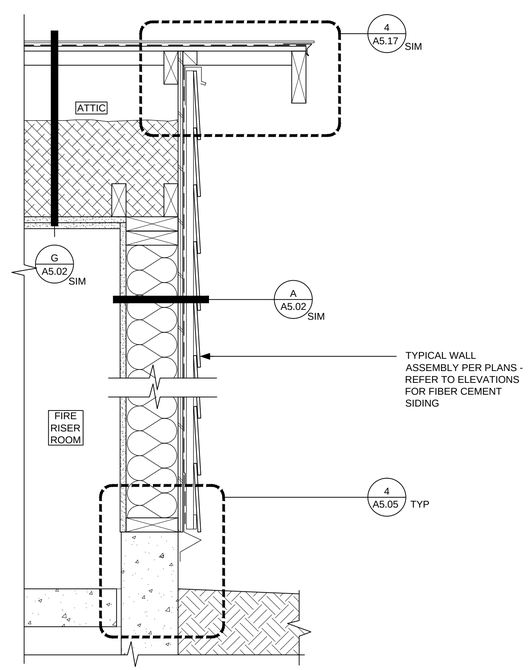

WALL SECTION - FIRE RISER ROOM

3 SCALE: 1 1/2" = 1'-0"

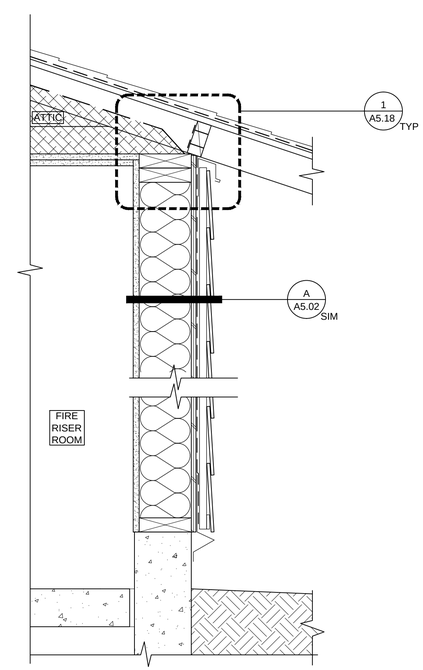

WALL SECTION - FIRE RISER ROOM

4 SCALE: 1 1/2" = 1'-0"

REGISTERED ARCHITECT
BRIAN D. CARLETON
PORTLAND, OREGON
2918
STATE OF OREGON

CARLETON HART ARCHITECTURE
322 nw 8th avenue portland, oregon 97209
t 503 243 2252 | f 503 243 3261 | carletonhart.com

PARKWAY VILLAGE : EAST
APARTMENT REHABILITATION
SALEM HOUSING AUTHORITY

PERMIT REVIEW / BID SET

EXTERIOR DETAILS: WALL SECTIONS

PROJ NO. 21348

01.21.14

COPYRIGHT - CARLETON HART ARCHITECTURE DO NOT REPRODUCE WITHOUT PERMISSION

A5.01

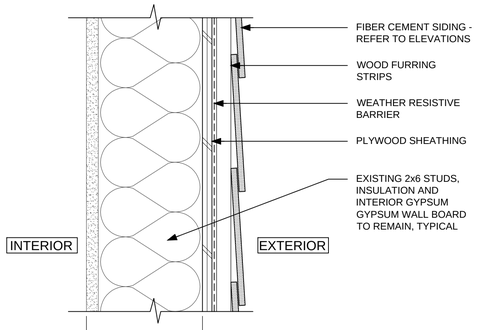

SECTION

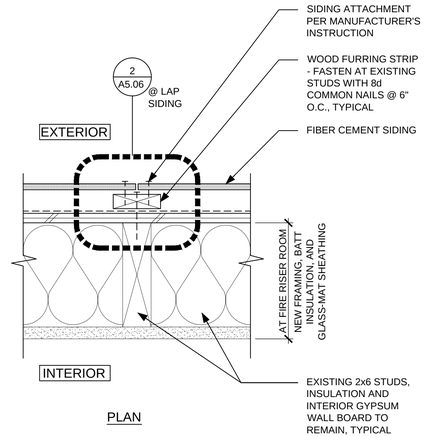

PLAN

A - EXTERIOR FIBER CEMENT WALL ASSEMBLY - INSULATED

(RAINSCREEN)
1-HR FIRE-RESISTANCE RATING

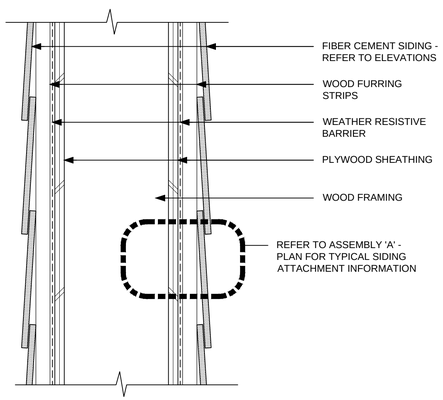

SECTION

B - EXTERIOR FIBER CEMENT WALL ASSEMBLY - NON-INSULATED

(RAINSCREEN)
NON-RATED ASSEMBLY

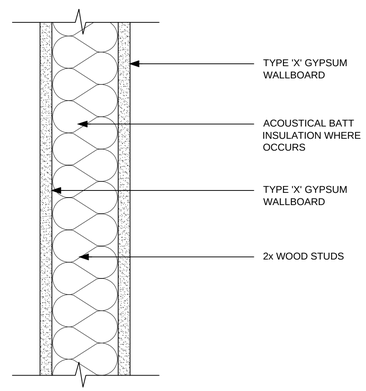

SECTION

C - EXISTING INTERIOR WALL ASSEMBLY - LOAD BEARING

1-HOUR FIRE RESISTANCE RATING

ASSEMBLY NOTES

ASSEMBLY 'A':

TABLE:	DESCRIPTION OF FINISH:	TIME (MINS):
721.6.2(1)	(1) INTERIOR LAYER 5/8" TYPE 'X' GYPSUM WALLBOARD	40
721.6.2(2)	WOOD STUDS 16 INCHES O.C.	20
721.6.2(5)	GLASS FIBER MINERAL WOOL BATTS*	15

ASSEMBLY 'B':

TABLE:	DESCRIPTION OF FINISH:	TIME (MINS):
721.6.2(1)	15/32" WOOD STRUCTURAL PANEL BONDED WITH EXTERIOR GLUE	10
721.6.2(2)	EXISTING WOOD STUDS 16" O.C.	20

ASSEMBLY 'C':

TABLE:	DESCRIPTION OF FINISH:	TIME (MINS):
721.6.2(1)	(1) INTERIOR LAYER 5/8" TYPE 'X' GYPSUM WALLBOARD	40
721.6.2(2)	EXISTING WOOD STUDS 16" O.C.	20
721.6.2(1)	(1) INTERIOR LAYER 5/8" TYPE 'X' GYPSUM WALLBOARD	40
AT DEMISING WALLS:		
721.6.2(1)	GLASS FIBER MINERAL WOOL BATTS*	15

ASSEMBLY 'D':

TABLE:	DESCRIPTION OF FINISH:	TIME (MINS):
721.6.2(1)	(1) INTERIOR LAYER GLASS-MAT SHEATHING	40
721.6.2(1)	15/32" WOOD STRUCTURAL PANEL BONDED WITH EXTERIOR GLUE	10
721.6.2(2)	EXISTING WOOD STUDS 16" O.C.	20
721.6.2(5)	EXISTING BATT INSULATION	15
721.6.2(1)	EXISTING 5/8" GYPSUM WALLBOARD	40

ASSEMBLY 'E':

TABLE:	DESCRIPTION OF FINISH:	TIME (MINS):
720.1(3)21-1.1	(2) INTERIOR LAYER 5/8" TYPE 'X' GYPSUM WALLBOARD WOOD TRUSSES 24" O.C. BLOWN-IN INSULATION 1/2" PLYWOOD SHEATHING	60

ASSEMBLY 'G':

TABLE:	DESCRIPTION OF FINISH:	TIME (MINS):
720.1(3)21-1.1	(2) INTERIOR LAYER 5/8" TYPE 'X' GYPSUM WALLBOARD WOOD TRUSSES BLOWN IN INSULATION PLYWOOD SHEATHING	60

GENERAL NOTES

A. PER 2010 OSSC TABLE 601, THERE IS NO FIRE RESISTANCE RATING REQUIRED FOR EXTERIOR LOAD-BEARING WALLS. HOWEVER, A 1-HR HOUR RATING IS PROVIDED THROUGH THE FOLLOWING PRESCRIPTIVE PATH OUTLINED IN SECTION 721.6.2.

B. *ADD TO THE FIRE-RESISTANCE RATING OF WOOD STUD WALLS IF THE SPACES BETWEEN THE STUDS ARE COMPLETELY FILLED WITH GLASS FIBER MINERAL WOOL BATTS WEIGHING NOT LESS THAN 2 POUNDS PER CUBIC FOOT (0.6 POUNDS PER SQUARE FOOT OF WALL SURFACE) OR ROCKWOOL OR SLAG MATERIAL WOOL BATTS WEIGHING NOT LESS THAN 3.3 POUNDS PER CUBIC FOOT (1 POUND PER SQUARE FOOT OF WALL SURFACE), OR CELLULOSE INSULATION HAVING A NOMINAL DENSITY NOT LESS THAN 2.6 POUNDS PER CUBIC FOOT.

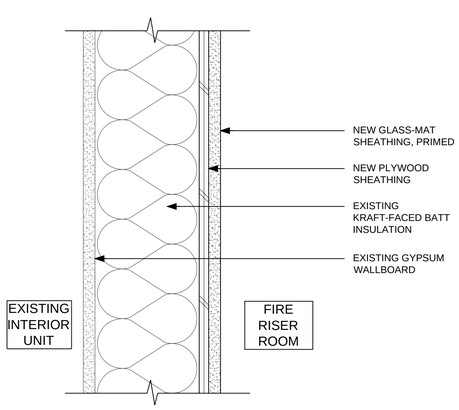

SECTION

D - EXTERIOR WALL ASSEMBLY - FIRE RISER ROOM

1-HOUR FIRE-RESISTANCE RATING

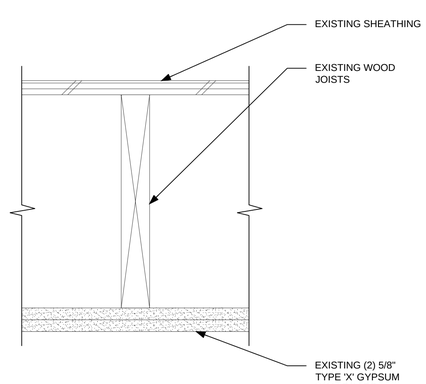

E - EXISTING FLOOR/CEILING ASSEMBLY

1-HOUR FIRE-RESISTANCE RATING
OSSC TABLE 720.1(3) - 21 ITEM#: 21-1.1

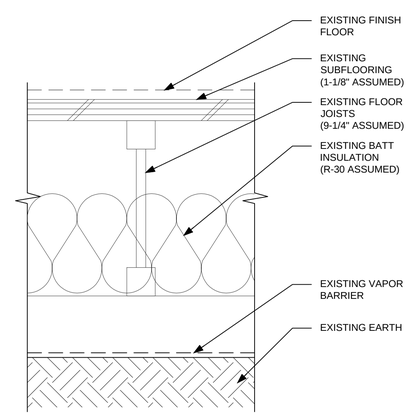

F - EXISTING FIRST FLOOR ASSEMBLY

NON-RATED

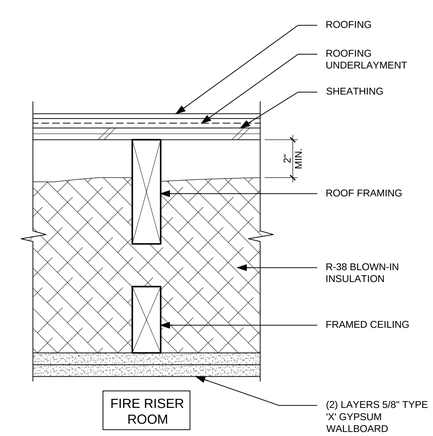

G - ROOF/CEILING ASSEMBLY - FIRE RISER ROOM

1-HOUR FIRE-RESISTANCE RATING
OSSC TABLE 720.1(3) - 21 ITEM#: 21-1.1

REGISTERED ARCHITECT
BRIAN D. CARLETON
PORTLAND, OREGON
2918
STATE OF OREGON

CARLETON HART ARCHITECTURE
322 nw 8th avenue portland, oregon 97209
t 503 243 2252 | f 503 243 3261 | carletonhart.com

PARKWAY VILLAGE : EAST
APARTMENT REHABILITATION
SALEM HOUSING AUTHORITY

PERMIT REVIEW / BID SET

EXTERIOR DETAILS: ASSEMBLY TYPES

PROJ NO. 21348

01.21.14

A5.02

COPYRIGHT - CARLETON HART ARCHITECTURE DO NOT REPRODUCE WITHOUT PERMISSION

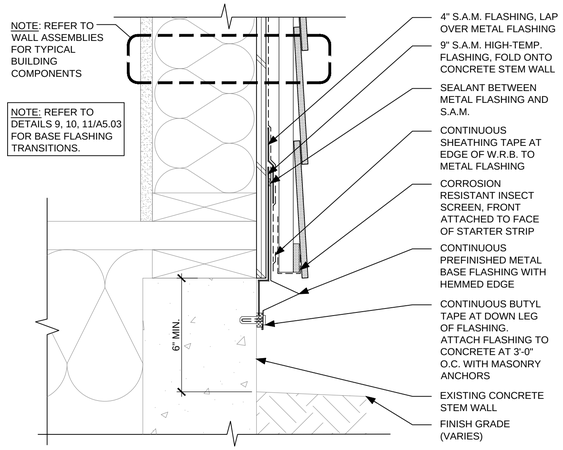

1 SIDING AT GRADE
SCALE: 3" = 1'-0"

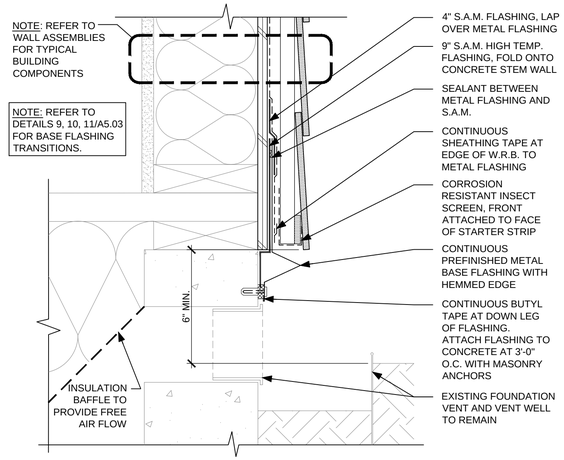

2 FOUNDATION VENT AT GRADE
SCALE: 3" = 1'-0"

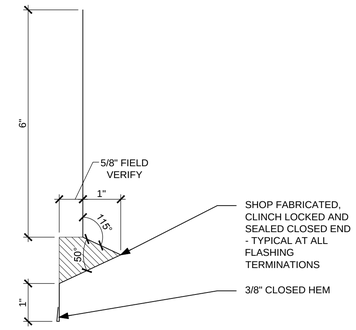

3 TYPICAL BASE FLASHING PROFILE
SCALE: 6" = 1'-0"

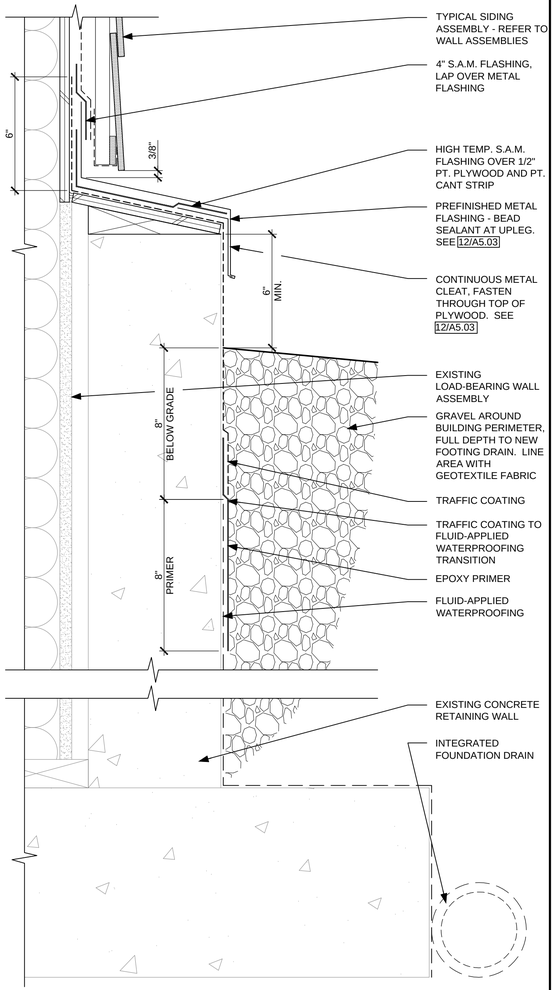

8 RETAINING WALL SECTION - TYPICAL
SCALE: 3" = 1'-0"

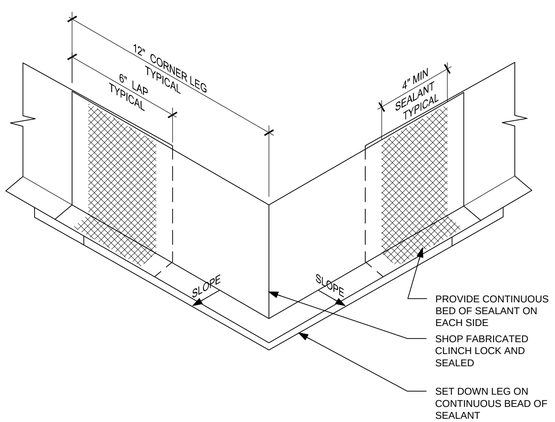

5 BASE FLASHING - OUTSIDE CORNER
SCALE: 3" = 1'-0"

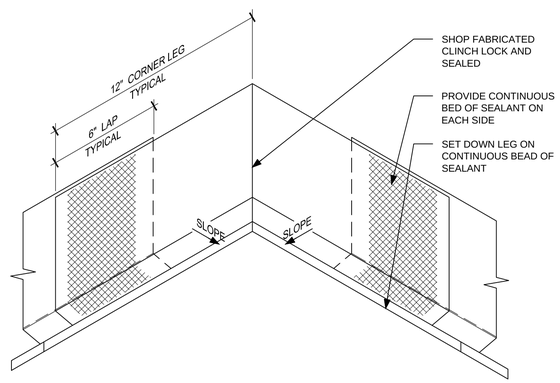

6 BASE FLASHING - INSIDE CORNER
SCALE: 3" = 1'-0"

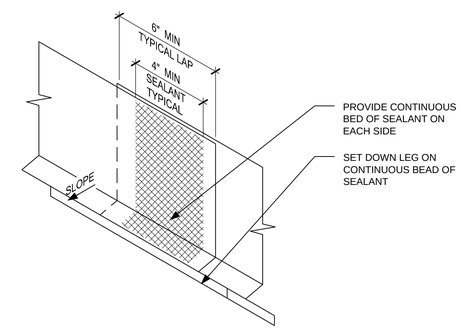

7 BASE FLASHING - OVERLAP
SCALE: 3" = 1'-0"

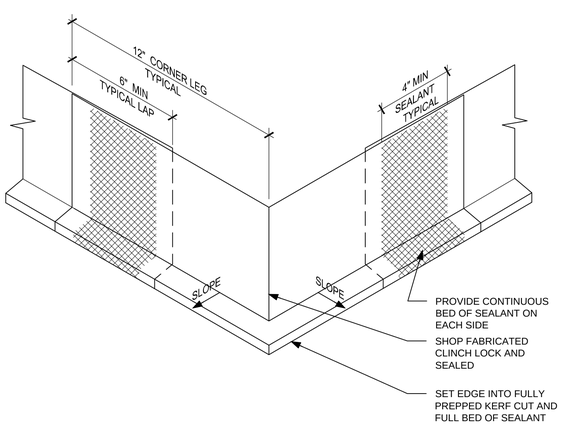

9 KERF BASE FLASHING - OUTSIDE CORNER
SCALE: 3" = 1'-0"

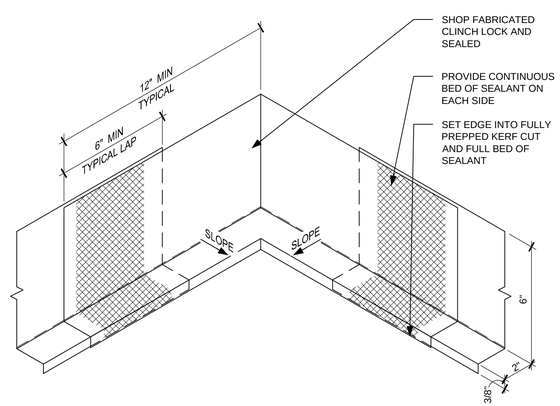

10 KERF BASE FLASHING - INSIDE CORNER
SCALE: 3" = 1'-0"

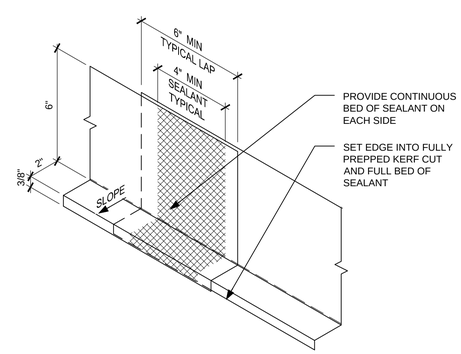

11 KERF BASE FLASHING - OVERLAP
SCALE: 3" = 1'-0"

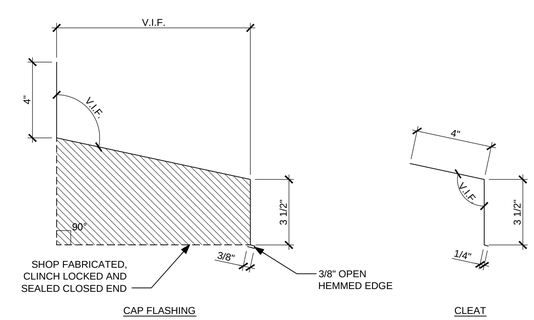

12 RETAINING WALL FLASHING PROFILES
SCALE: 3" = 1'-0"

REGISTERED ARCHITECT
BRIAN D. CARLETON
PORTLAND, OREGON
2918
STATE OF OREGON

CARLETON HART ARCHITECTURE
322 nw 8th avenue portland, oregon 97209
t 503 243 2252 | f 503 243 3261 | carletonhart.com

PARKWAY VILLAGE : EAST
APARTMENT REHABILITATION
SALEM HOUSING AUTHORITY

PERMIT REVIEW / BID SET

EXTERIOR DETAILS: FOUNDATION

PROJ NO. 21348

01.21.14

A5.03

COPYRIGHT - CARLETON HART ARCHITECTURE DO NOT REPRODUCE WITHOUT PERMISSION

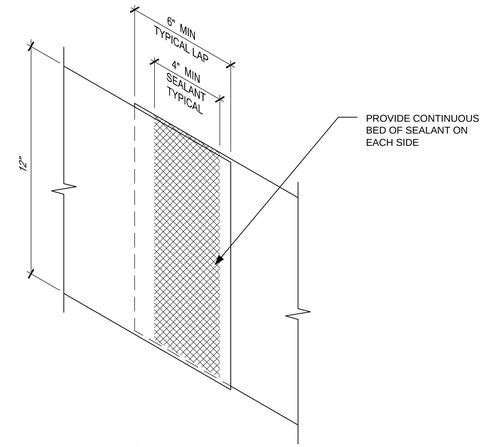

1 NOT USED
SCALE: NTS

2 NOT USED
SCALE: NTS

3 SUBFLASHING
SCALE: 3" = 1'-0"

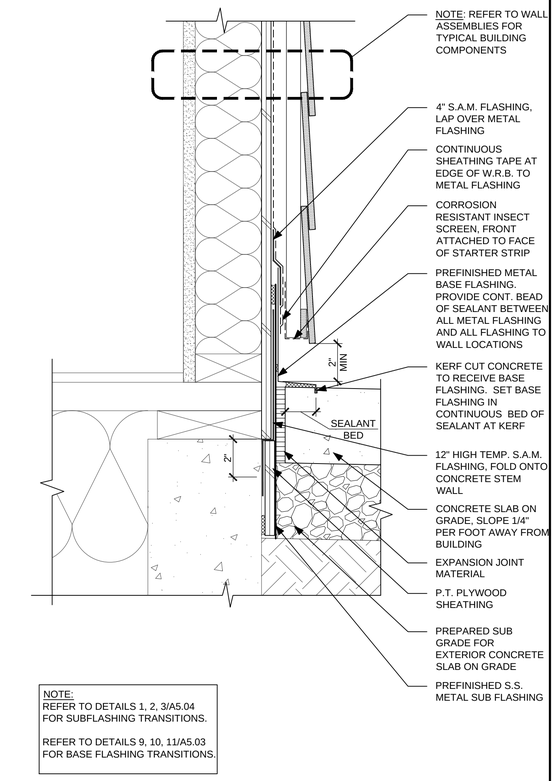

NOTE:
REFER TO DETAILS 1, 2, 3/A5.04
FOR SUBFLASHING TRANSITIONS.

REFER TO DETAILS 9, 10, 11/A5.03
FOR BASE FLASHING TRANSITIONS.

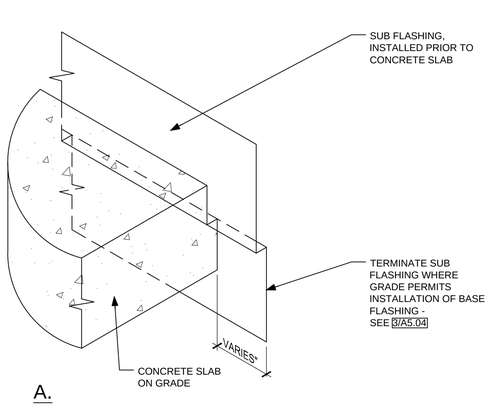

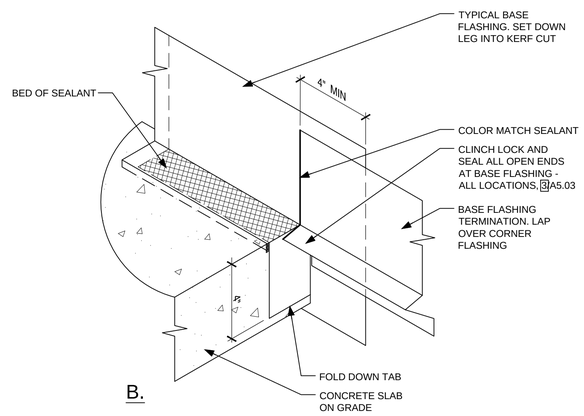

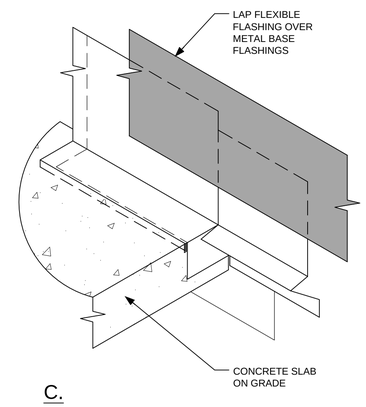

5 BASE FLASHING AT CONCRETE EDGE - PERPENDICULAR WALL
SCALE: N.T.S.

8 SIDING AT CONCRETE SLAB ON GRADE
SCALE: 3" = 1'-0"

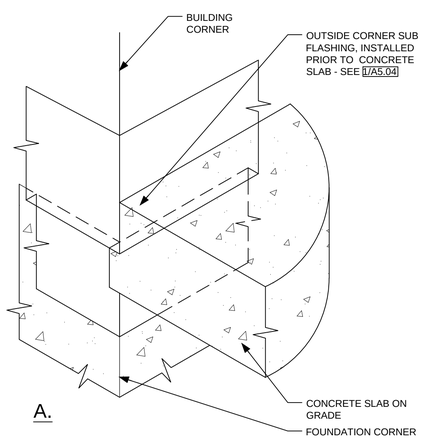

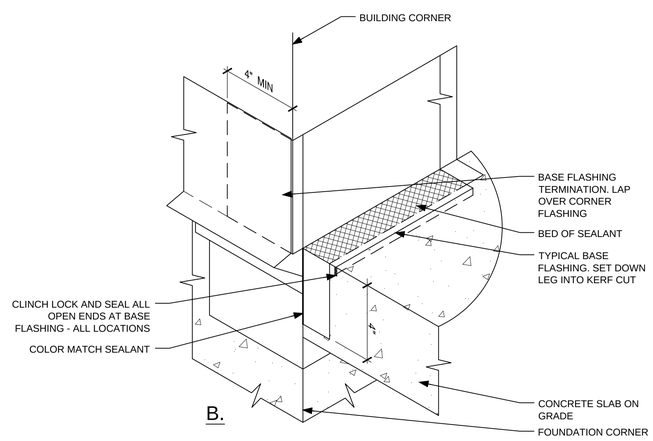

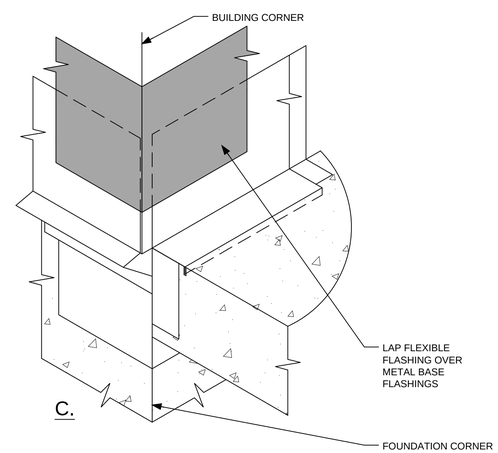

9 BASE FLASHING AT CONCRETE EDGE - AT OUTSIDE CORNER
SCALE: N.T.S.

12 NOT USED
SCALE: NTS

REGISTERED ARCHITECT
BRIAN D. CARLETON
PORTLAND, OREGON
2918
STATE OF OREGON

CARLETON HART ARCHITECTURE
322 nw 8th avenue portland, oregon 97209
t 503 243 2252 | f 503 243 3261 | carletonhart.com

PARKWAY VILLAGE : EAST
APARTMENT REHABILITATION
SALEM HOUSING AUTHORITY

PERMIT REVIEW / BID SET

EXTERIOR DETAILS:
FOUNDATION

PROJ NO.
21348

01.21.14

A5.04

COPYRIGHT - CARLETON HART ARCHITECTURE DO NOT REPRODUCE WITHOUT PERMISSION

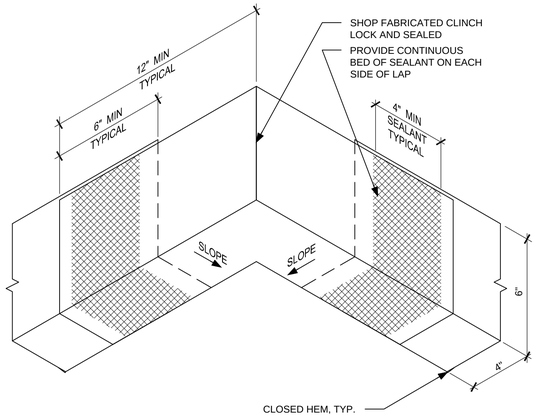

1 DECK BASE FLASHING - INSIDE CORNER
SCALE: 3" = 1'-0"

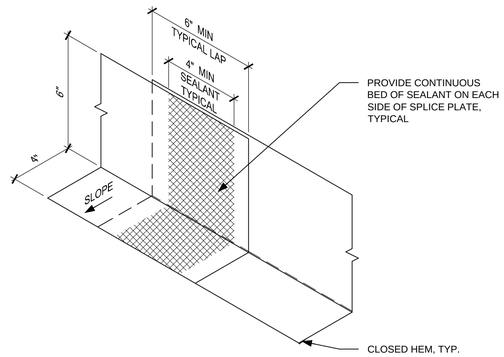

2 DECK BASE FLASHING
SCALE: 3" = 1'-0"

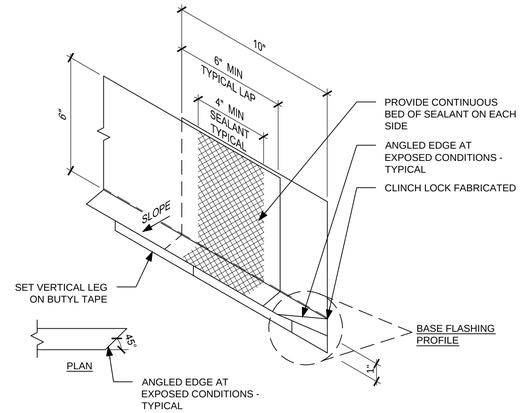

3 WALL @ FOUNDATION TERMINATION
SCALE: 3" = 1'-0"

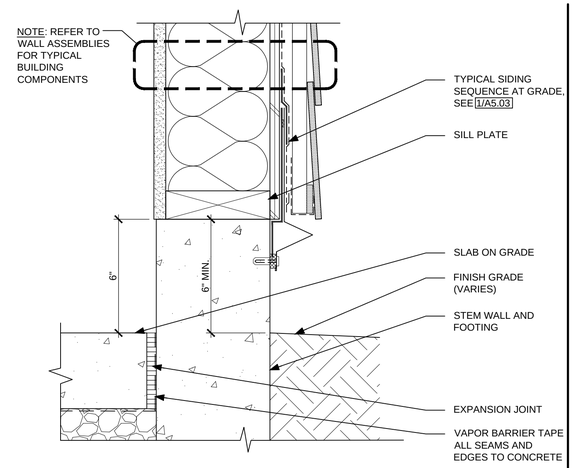

4 FOUNDATION AT FIRE RISER ROOM
SCALE: 3" = 1'-0"

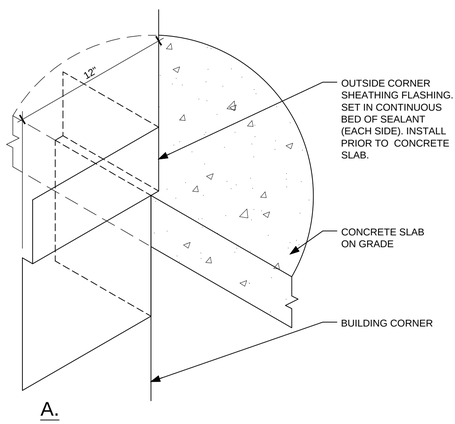

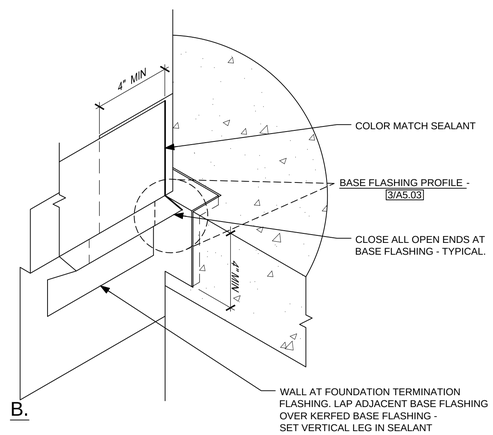

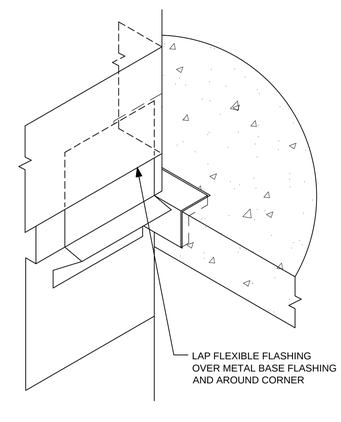

5 BASE FLASHING AT CONCRETE EDGE - AT OUTSIDE CORNER
SCALE: N.T.S.

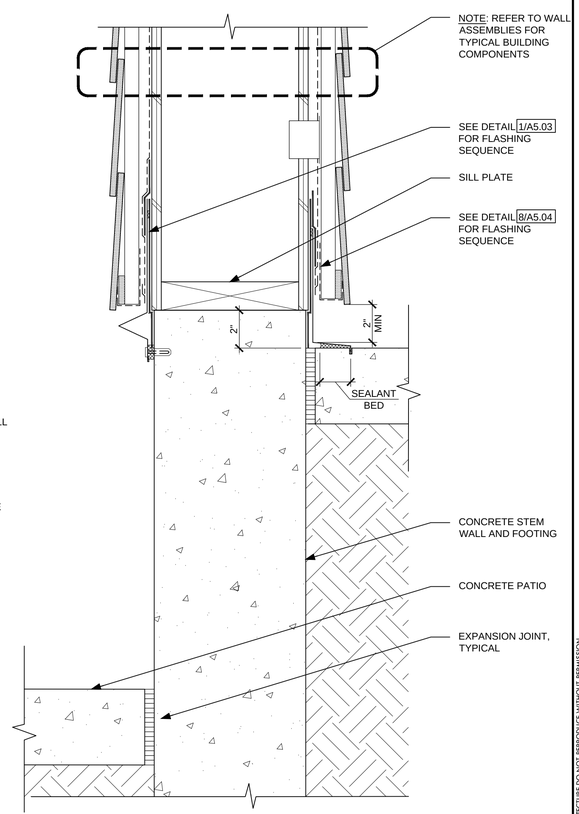

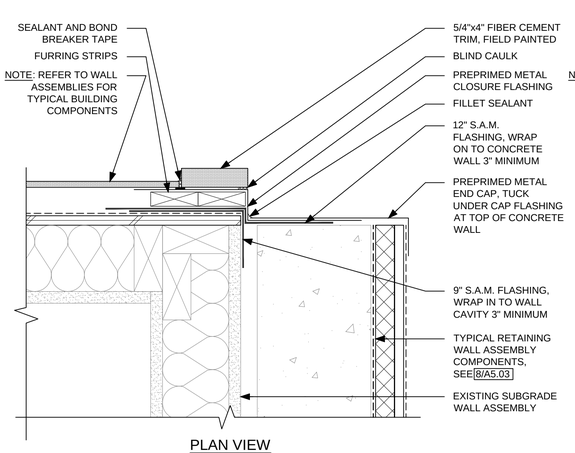

9 RETAINING WALL TERMINATION
SCALE: 3" = 1'-0"

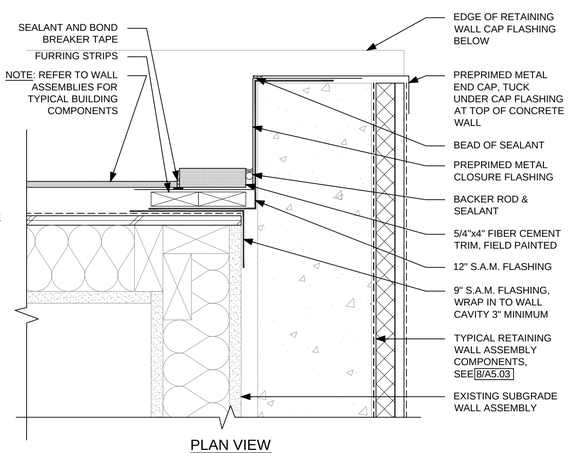

10 RETAINING WALL STEP
SCALE: 3" = 1'-0"

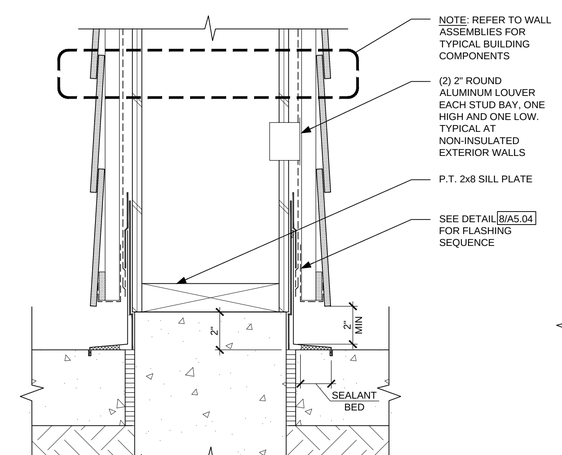

11 FOUNDATION AT PATIO SCREEN WALL
SCALE: 3" = 1'-0"

12 FOUNDATION AT PATIO STEP
SCALE: 3" = 1'-0"

REGISTERED ARCHITECT
BRIAN D. CARLETON
PORTLAND, OREGON
2918
STATE OF OREGON

CARLETON HART ARCHITECTURE
322 nw 8th avenue portland, oregon 97209
t 503 243 2252 | f 503 243 3261 | carletonhart.com

PARKWAY VILLAGE : EAST
APARTMENT REHABILITATION
SALEM HOUSING AUTHORITY

PERMIT REVIEW / BID SET

EXTERIOR DETAILS: FOUNDATION

PROJ NO. 21348

01.21.14

COPYRIGHT - CARLETON HART ARCHITECTURE DO NOT REPRODUCE WITHOUT PERMISSION

A5.05

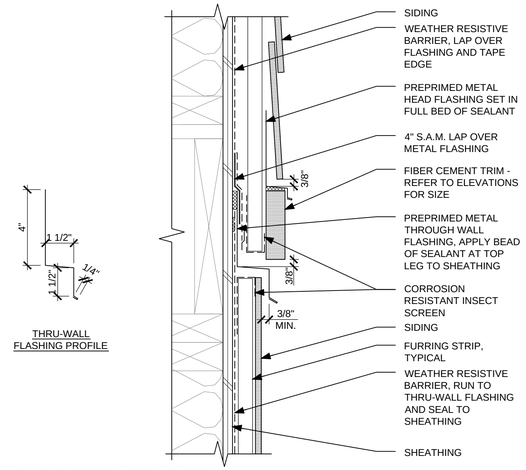

1 HORIZONTAL TRIM
SCALE: 3" = 1'-0"

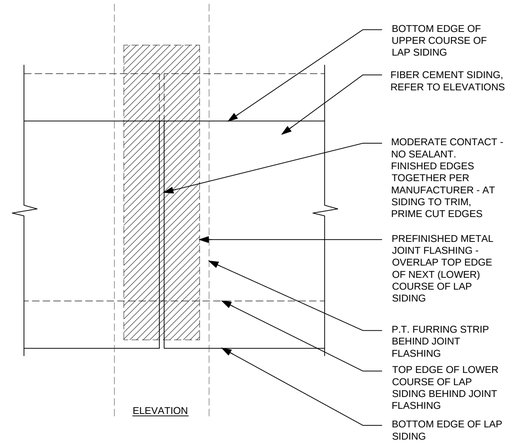

2 FIELD BUTT JOINT AT LAP SIDING
SCALE: 6"-1'-0"

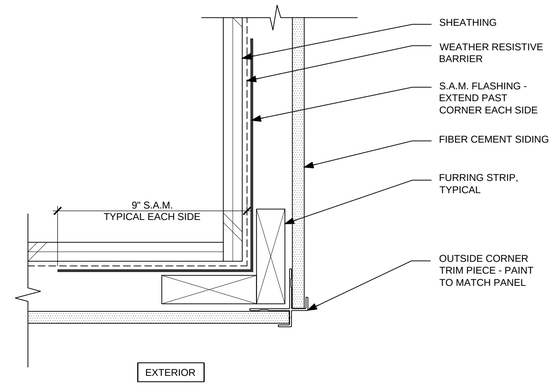

3 PANEL OUTSIDE CORNER
SCALE: 6" = 1'-0"

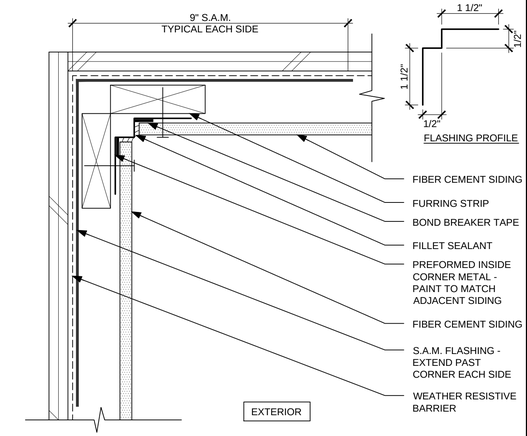

4 PANEL INSIDE CORNER
SCALE: 6" = 1'-0"

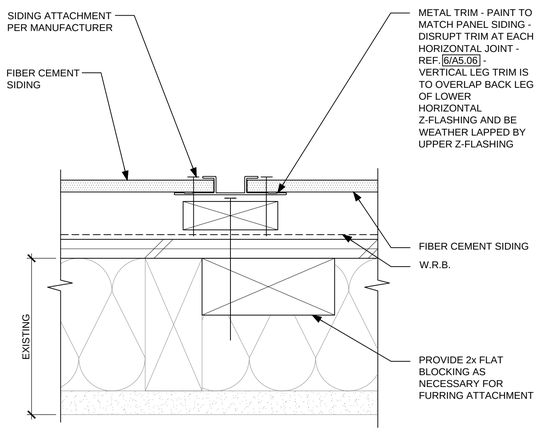

5 PANEL VERTICAL JOINT
SCALE: 6" = 1'-0"

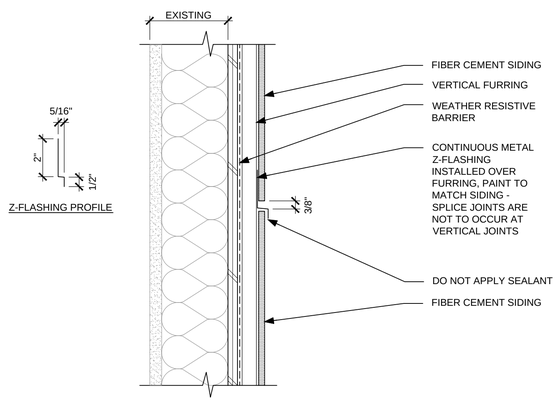

6 PANEL HORIZONTAL JOINT
SCALE: 3" = 1'-0"

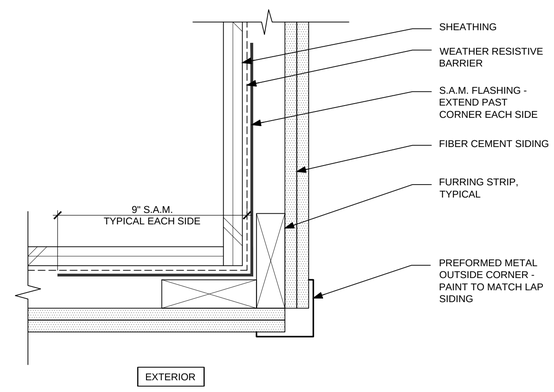

7 LAP SIDING OUTSIDE CORNER
SCALE: 6" = 1'-0"

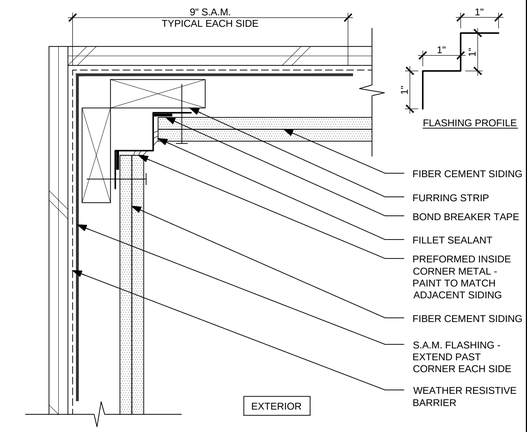

8 LAP INSIDE CORNER
SCALE: 6" = 1'-0"

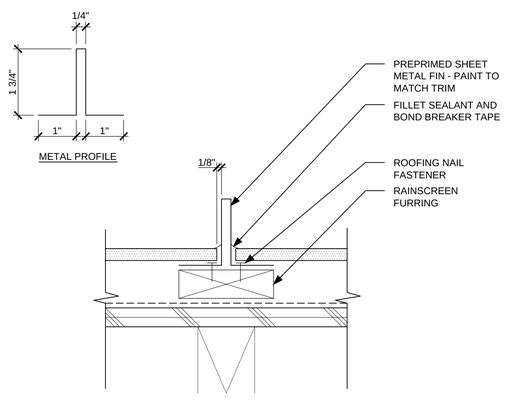

9 VERTICAL METAL FIN
SCALE: 6" = 1'-0"

10 NOT USED
SCALE:

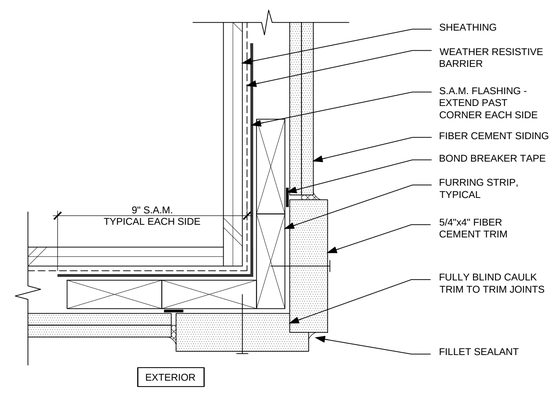

11 LAP SIDING OUTSIDE CORNER WITH TRIM
SCALE: 6" = 1'-0"

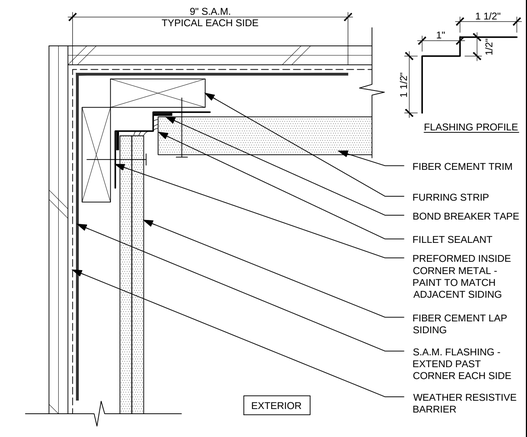

12 LAP INSIDE CORNER
SCALE: 6" = 1'-0"

COPYRIGHT - CARLETON HART ARCHITECTURE DO NOT REPRODUCE WITHOUT PERMISSION

REGISTERED ARCHITECT
BRIAN D. CARLETON
PORTLAND, OREGON
2918
STATE OF OREGON

CARLETON HART ARCHITECTURE
322 nw 8th avenue portland, oregon 97209
t 503 243 2262 | f 503 243 3261 | carletonhart.com

PARKWAY VILLAGE : EAST
APARTMENT REHABILITATION
SALEM HOUSING AUTHORITY

PERMIT REVIEW / BID SET

EXTERIOR DETAILS: SIDING

PROJ NO. 21348

01.21.14

A5.06

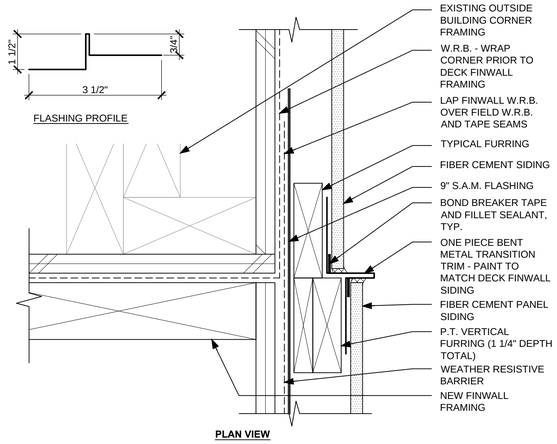

1 PANEL SIDING PLANE CHANGE
SCALE: 6" = 1'-0"

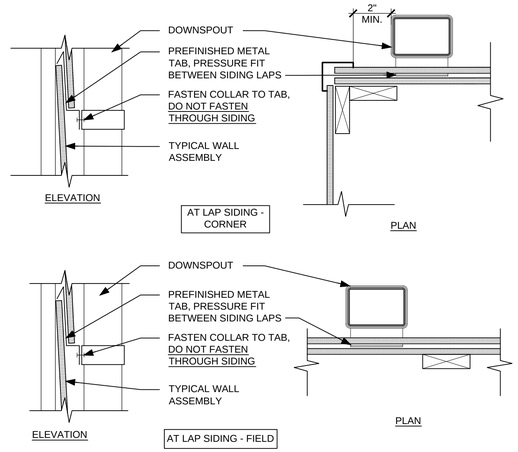

2 DOWNSPOUT STANDOFF
SCALE: 3" = 1'-0"

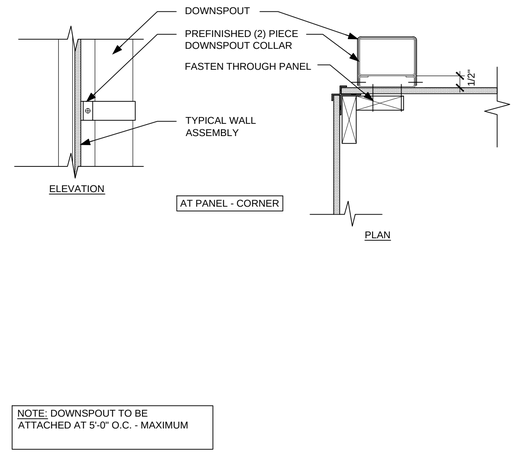

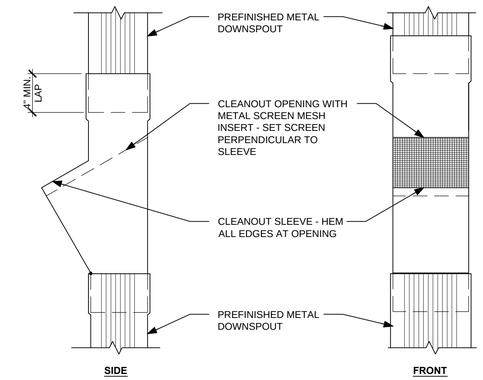

4 DOWNSPOUT CLEANOUT
SCALE: N.T.S.

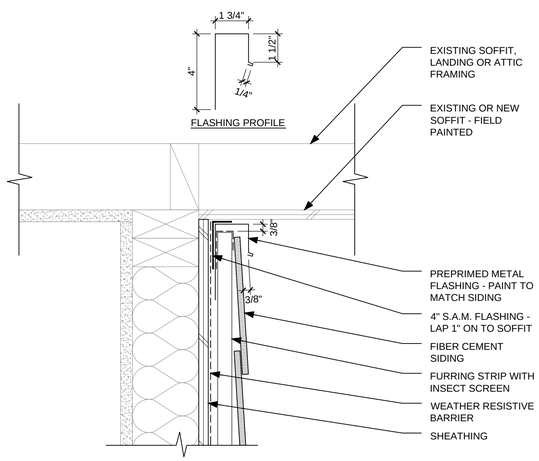

5 LAP SIDING AT SOFFIT
SCALE: 3" = 1'-0"

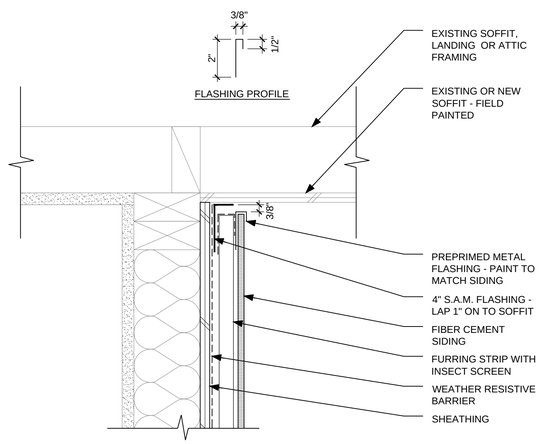

6 PANEL SIDING AT SOFFIT
SCALE: 3" = 1'-0"

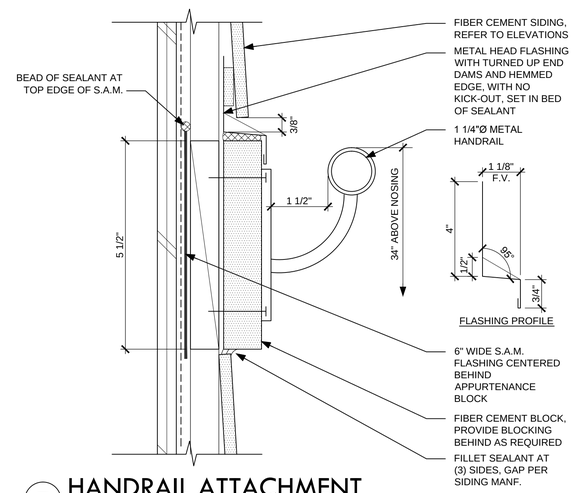

7 HANDRAIL ATTACHMENT
SCALE: 6" = 1'-0"

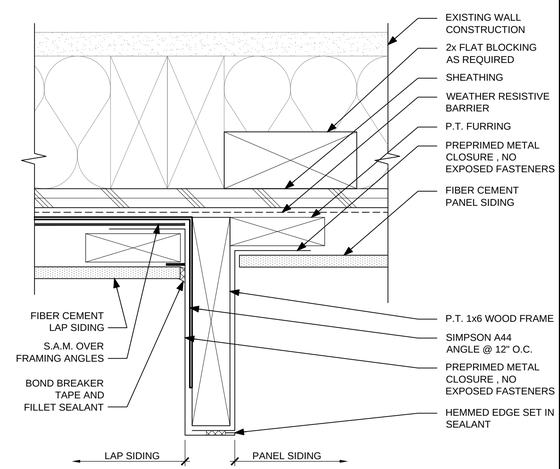

8 METAL FRAME @ SIDING TRANSITION
SCALE: 6" = 1'-0"

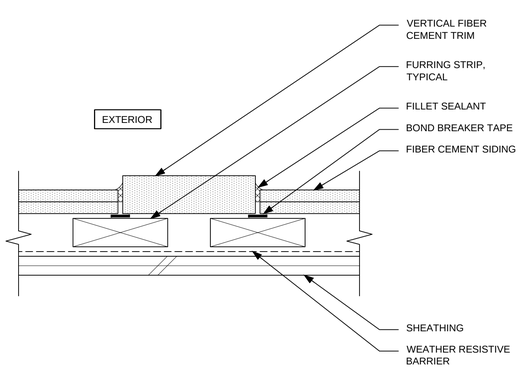

9 VERTICAL TRIM AT SIDING
SCALE: 6" = 1'-0"

10 NOT USED
SCALE: NTS

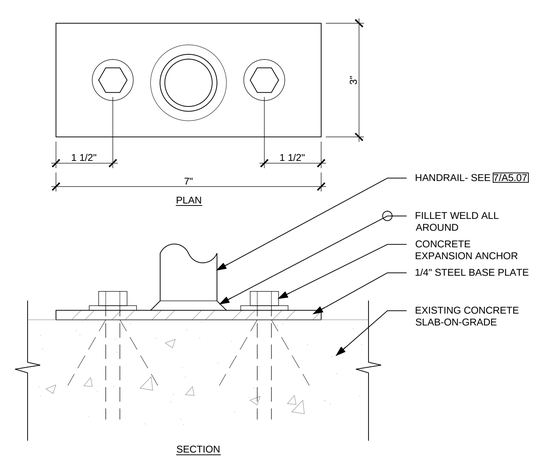

11 HANDRAIL TERMINATION AT CONCRETE
SCALE: 6" = 1'-0"

12 NOT USED
SCALE: NTS

REGISTERED ARCHITECT
BRIAN D. CARLETON
PORTLAND, OREGON
2918
STATE OF OREGON

CARLETON HART ARCHITECTURE
322 nw 8th avenue portland, oregon 97209
t 503 243 2262 | f 503 243 3261 | carletonhart.com

PARKWAY VILLAGE : EAST
APARTMENT REHABILITATION
SALEM HOUSING AUTHORITY

PERMIT REVIEW / BID SET

EXTERIOR DETAILS: SIDING

PROJ NO. 21348

01.21.14

A5.07

COPYRIGHT - CARLETON HART ARCHITECTURE DO NOT REPRODUCE WITHOUT PERMISSION

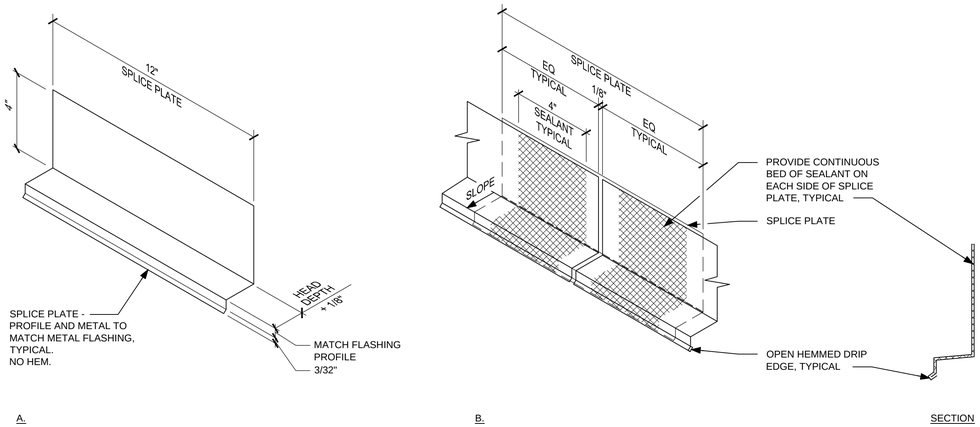

1 SPLICE PLATE AND FIELD JOINT AT FLASHING

SCALE: 3" = 1'-0"

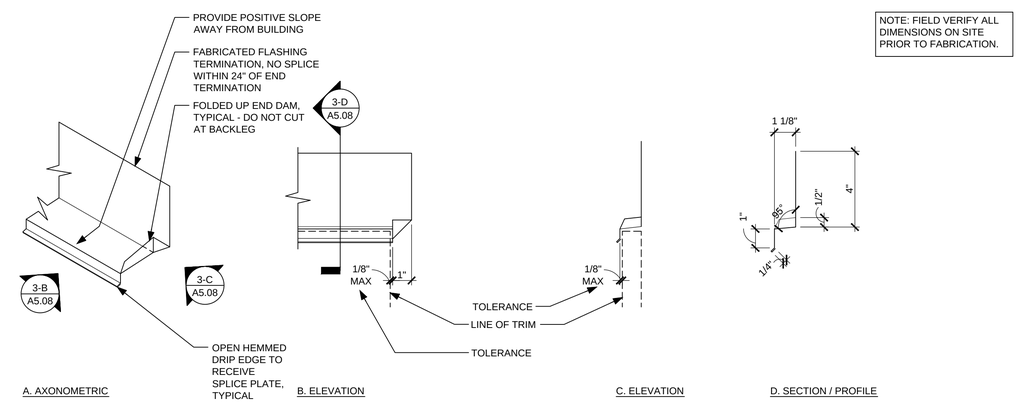

NOTE: FIELD VERIFY ALL DIMENSIONS ON SITE PRIOR TO FABRICATION.

3 TYPICAL HEAD FLASHING - FIELD FABRICATED

SCALE: 3" = 1'-0"

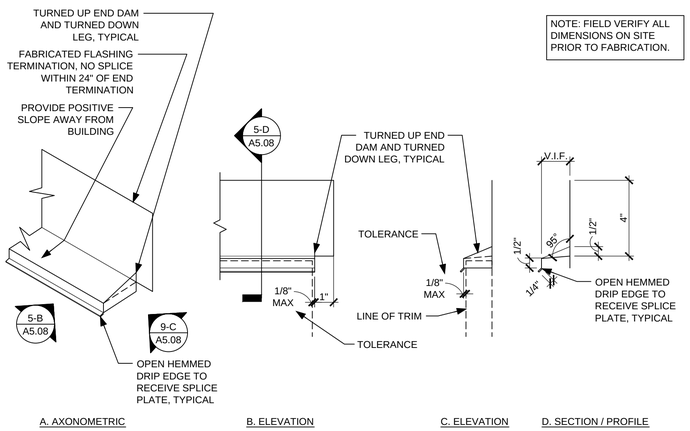

NOTE: FIELD VERIFY ALL DIMENSIONS ON SITE PRIOR TO FABRICATION.

5 TYPICAL HEAD FLASHING - SHOP FABRICATED

SCALE: 3" = 1'-0"

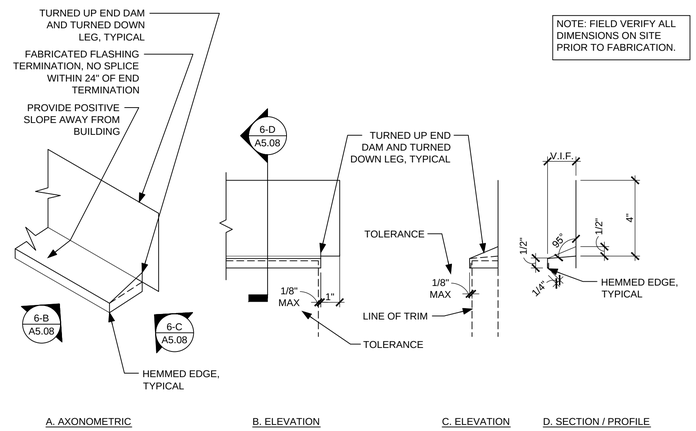

NOTE: FIELD VERIFY ALL DIMENSIONS ON SITE PRIOR TO FABRICATION.

6 HEAD FLASHING AT AREAS WITHIN REACH

SCALE: 3" = 1'-0"

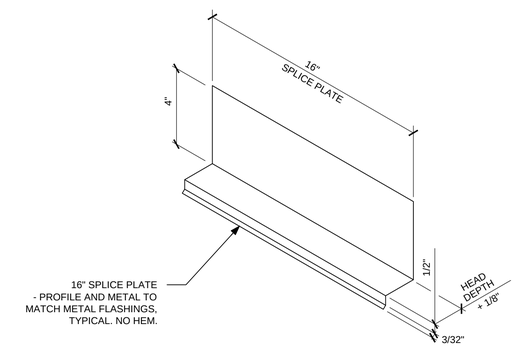

8 TYPICAL SPLICE PLATE

SCALE: 3" = 1'-0"

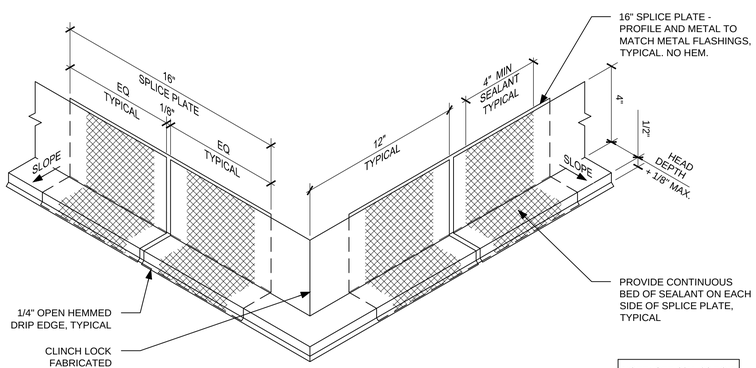

NOTE: SEE 8/A5.08 FOR TYPICAL SPLICE PLATE

9 TRIM HEAD FLASHING - OUTSIDE CORNER

SCALE: 3" = 1'-0"

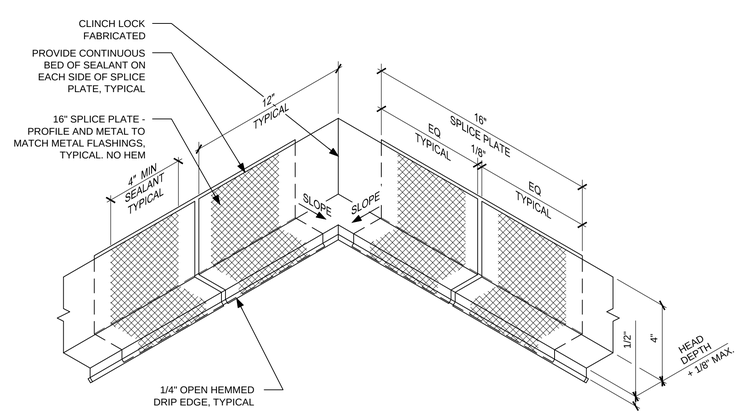

NOTE: SEE 8/A5.08 FOR TYPICAL SPLICE PLATE

10 TRIM HEAD FLASHING - INSIDE CORNER

SCALE: 3" = 1'-0"

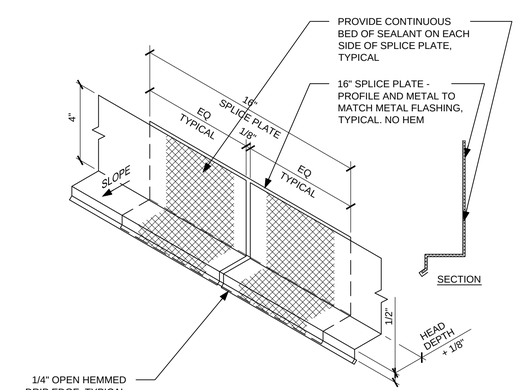

NOTE: SEE 8/A5.08 FOR TYPICAL SPLICE PLATE

12 TRIM HEAD FLASHING - SPLICE

SCALE: 3" = 1'-0"

REGISTERED ARCHITECT
BRIAN D. CARLETON
PORTLAND, OREGON
2918
STATE OF OREGON

CARLETON HART ARCHITECTURE
322 nw 8th avenue portland, oregon 97209
t 503 243 2262 | f 503 243 3261 | carletonhart.com

PARKWAY VILLAGE : EAST
APARTMENT REHABILITATION
SALEM HOUSING AUTHORITY

PERMIT REVIEW / BID SET

EXTERIOR DETAILS:
HEAD FLASHING

PROJ NO.
21348

01.21.14

A5.08

COPYRIGHT - CARLETON HART ARCHITECTURE DO NOT REPRODUCE WITHOUT PERMISSION

NOTE: DIMENSIONS AT SIMILAR CONDITIONS TO BE CONSISTENT WHERE POSSIBLE.

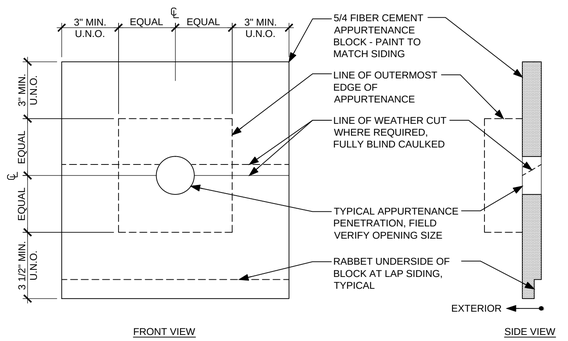

1 TYPICAL APPURTENANCE BLOCK
SCALE: 3" = 1'-0"

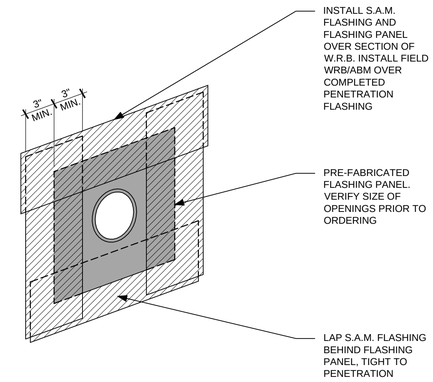

2 TYPICAL FLASHING PANEL
SCALE: N.T.S.

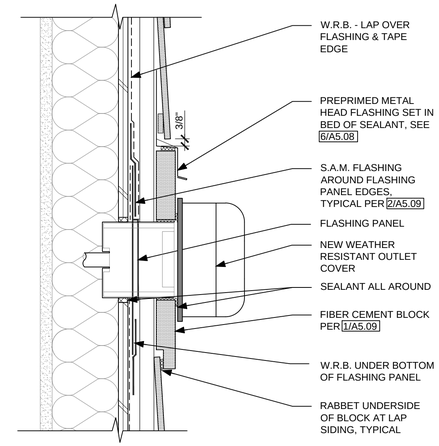

3 ELECTRICAL OUTLET - SECTION
SCALE: 3" = 1'-0"

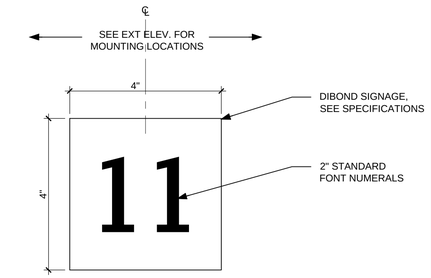

4 TYP. FRONT DOOR ENTRY NUMBER
SCALE: 6" = 1'-0"

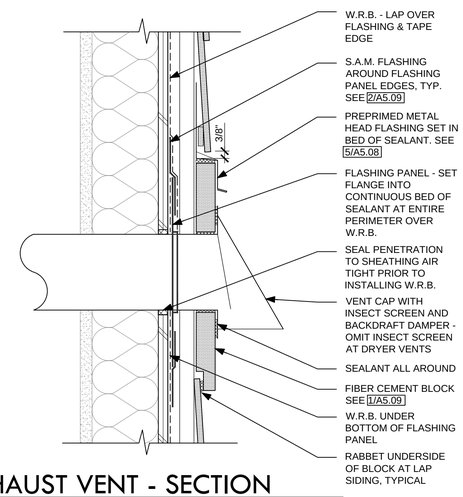

5 EXHAUST VENT - SECTION
SCALE: 3" = 1'-0"

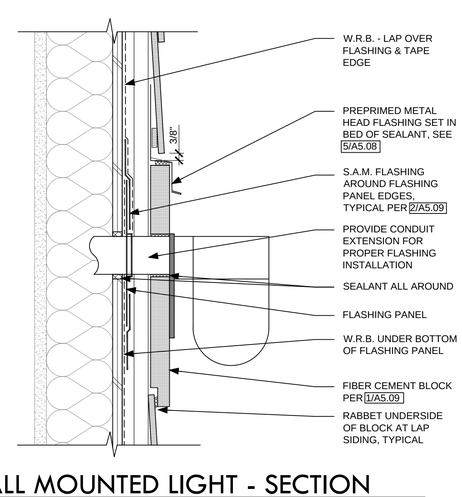

6 WALL MOUNTED LIGHT - SECTION
SCALE: 3" = 1'-0"

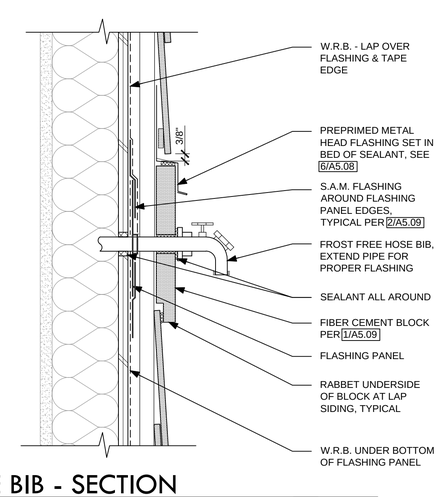

7 HOSE BIB - SECTION
SCALE: 3" = 1'-0"

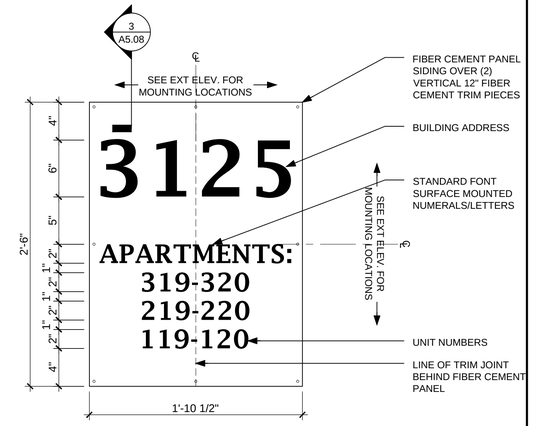

8 TYPICAL BUILDING SIGNAGE
SCALE: 1 1/2" = 1'-0"

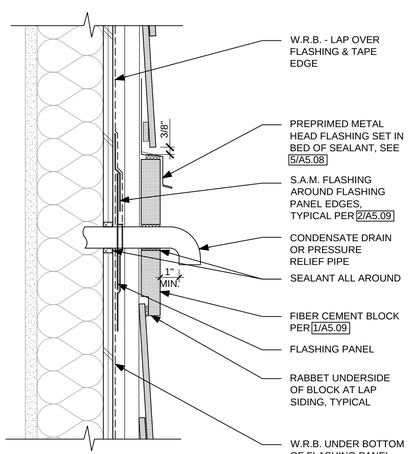

9 CONDENSATE PIPE - SECTION
SCALE: 3" = 1'-0"

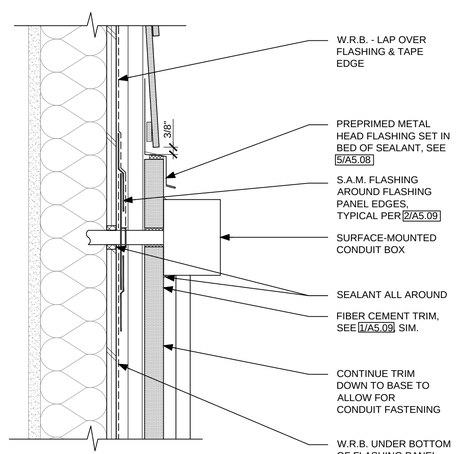

10 CONDUIT BOX - SECTION
SCALE: 3" = 1'-0"

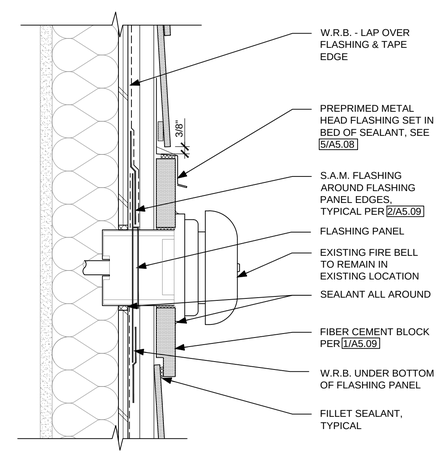

11 FIRE BELL - SECTION
SCALE: 3" = 1'-0"

GENERAL NOTES:

1. DEMOLISH EXISTING WALL/FRAMING AS NECESSARY TO ALLOW WORK TO BE COMPLETED AS INTENDED. REPAIR / REPLACE ALL DEMOLISHED MATERIALS.
2. APPURTENANCE BLOCKS NOT TO BE RABBETED AT PANEL SIDING. REFER TO ELEVATIONS FOR SIDING MATERIAL.

REGISTERED ARCHITECT BRIAN D. CARLETON PORTLAND, OREGON 2918 STATE OF OREGON

CARLETON HART ARCHITECTURE
322 nw 8th avenue portland, oregon 97209
t 503 243 2252 | f 503 243 3261 | carletonhart.com

PARKWAY VILLAGE : EAST
APARTMENT REHABILITATION
SALEM HOUSING AUTHORITY

PERMIT REVIEW / BID SET

EXTERIOR DETAILS: APPURTENANCE

PROJ NO. 21348

01.21.14

A5.09

COPYRIGHT - CARLETON HART ARCHITECTURE DO NOT REPRODUCE WITHOUT PERMISSION

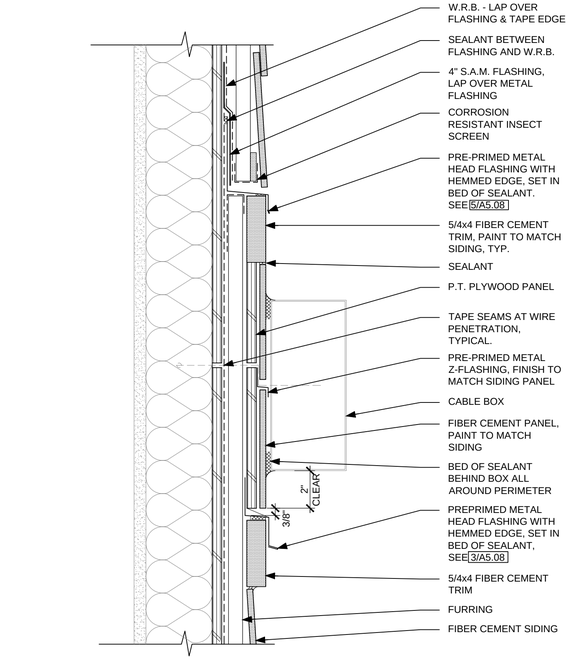

1 CABLE BOX DETAIL
SCALE: 3" = 1'-0"

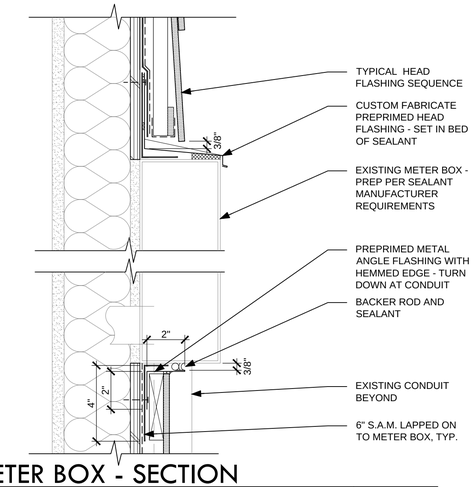

2 METER BOX - SECTION
SCALE: 3" = 1'-0"

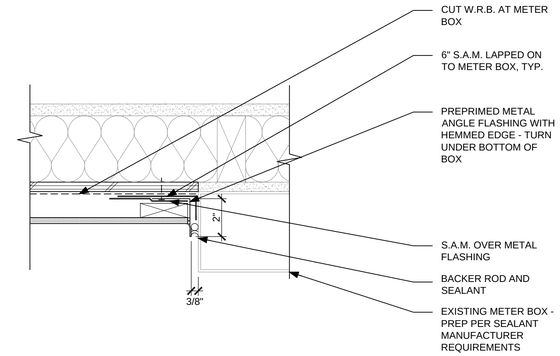

3 METER BOX - PLAN @ BOX
SCALE: 3" = 1'-0"

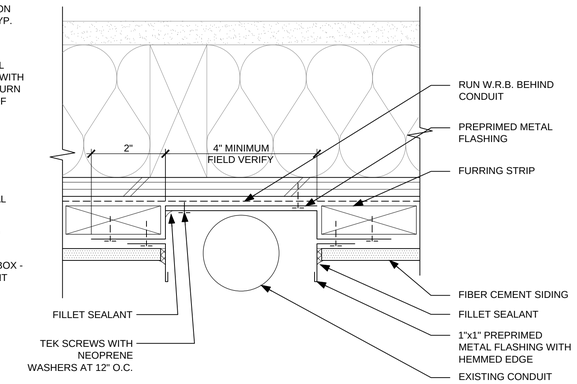

4 METER BOX - PLAN @ CONDUIT
SCALE: 6" = 1'-0"

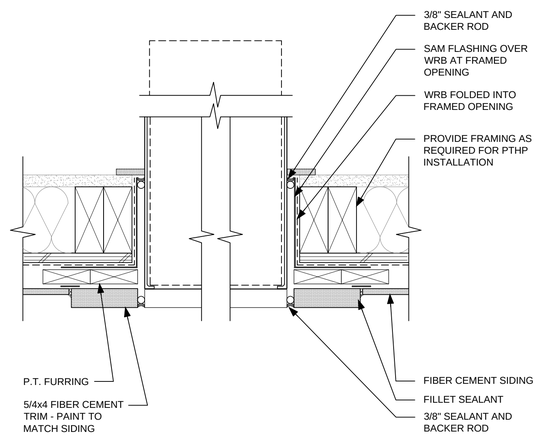

6 THROUGH-WALL PTHP SLEEVE - PLAN
SCALE: 3" = 1'-0"

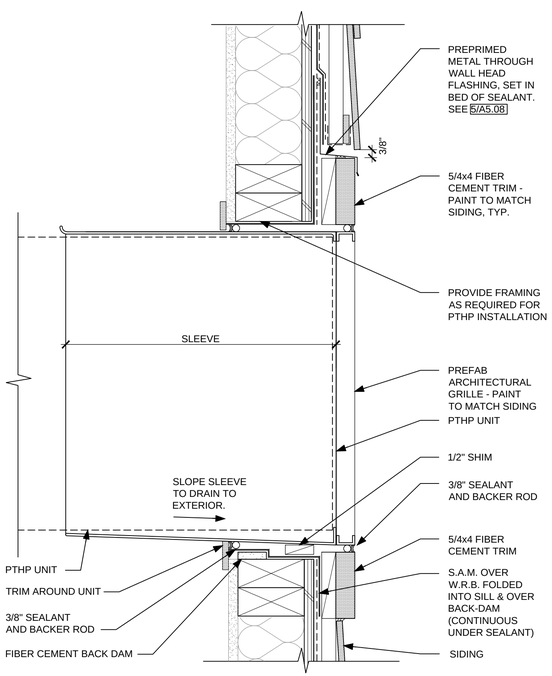

9 THROUGH-WALL PTHP SLEEVE - SECTION
SCALE: 3" = 1'-0"

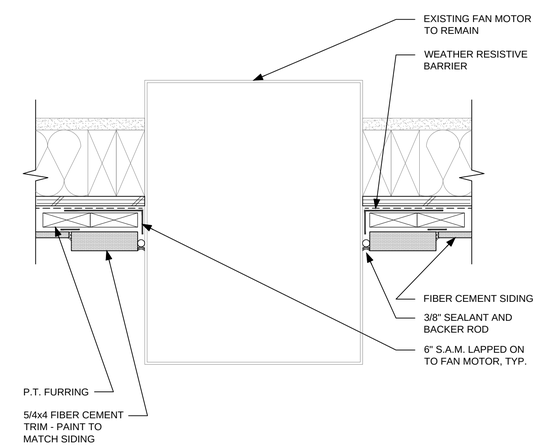

10 CRLAWSPACE FAN - PLAN
SCALE: 3" = 1'-0"

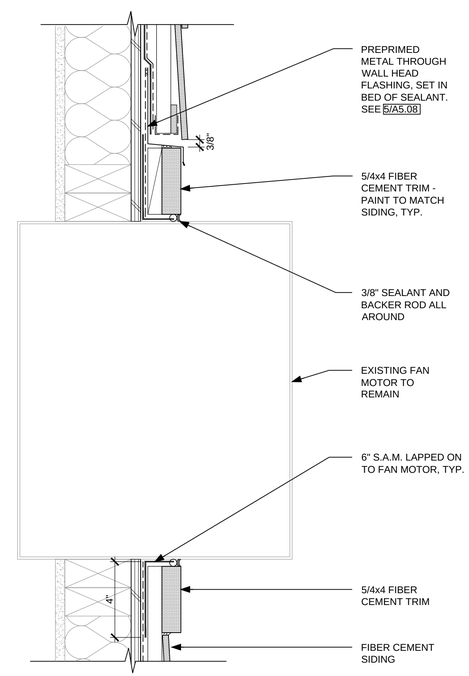

11 CARWLSPACE FAN - SECTION
SCALE: 3" = 1'-0"

8 NOT USED
SCALE: NTS

12 NOT USED
SCALE: NTS

REGISTERED ARCHITECT
BRIAN D. CARLETON
PORTLAND, OREGON
2918
STATE OF OREGON

CARLETON HART ARCHITECTURE
322 nw 8th avenue portland, oregon 97209
t 503 243 2252 | f 503 243 3261 | carletonhart.com

PARKWAY VILLAGE : EAST
APARTMENT REHABILITATION
SALEM HOUSING AUTHORITY

PERMIT REVIEW / BID SET

EXTERIOR DETAILS: APPURTENANCE

PROJ NO. 21348

01.21.14

A5.10

COPYRIGHT - CARLETON HART ARCHITECTURE DO NOT REPRODUCE WITHOUT PERMISSION

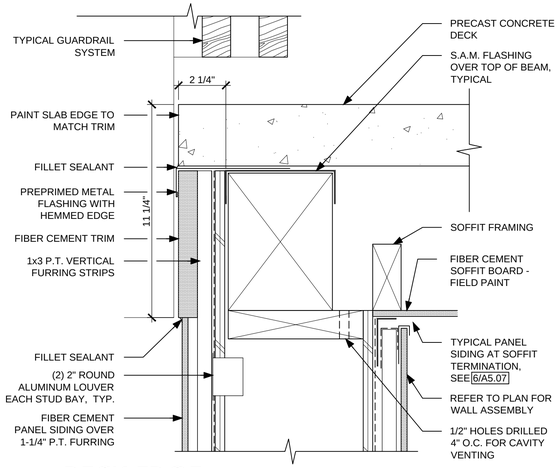

1 DECK EDGE
SCALE: 3" = 1'-0"

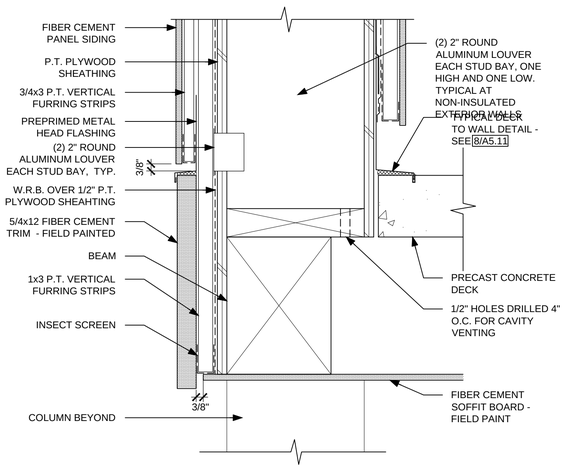

5 DECK EDGE AT FIN WALL
SCALE: 3" = 1'-0"

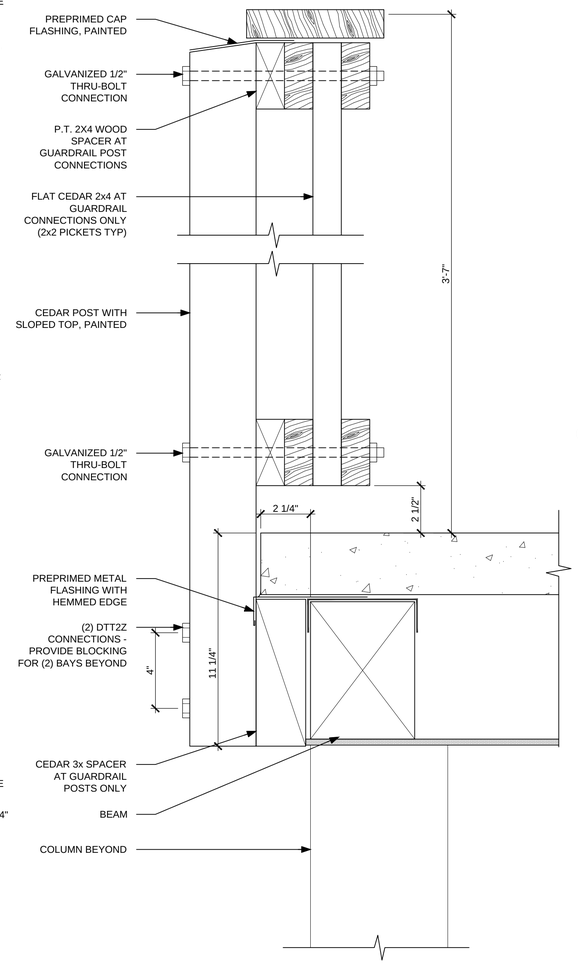

6 GUARDRAIL CONNECTION
SCALE: 3" = 1'-0"

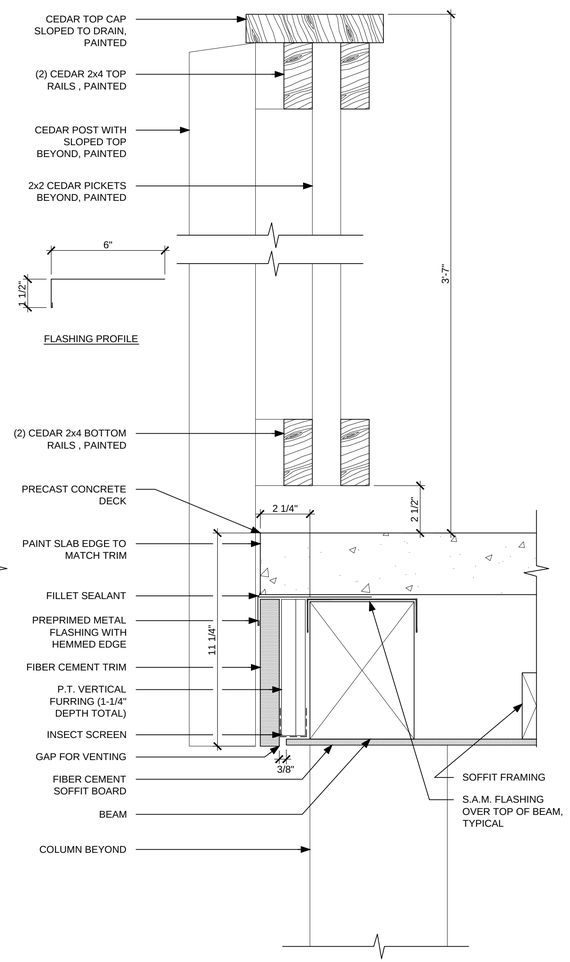

7 DECK EDGE AT GUARDRAIL
SCALE: 3" = 1'-0"

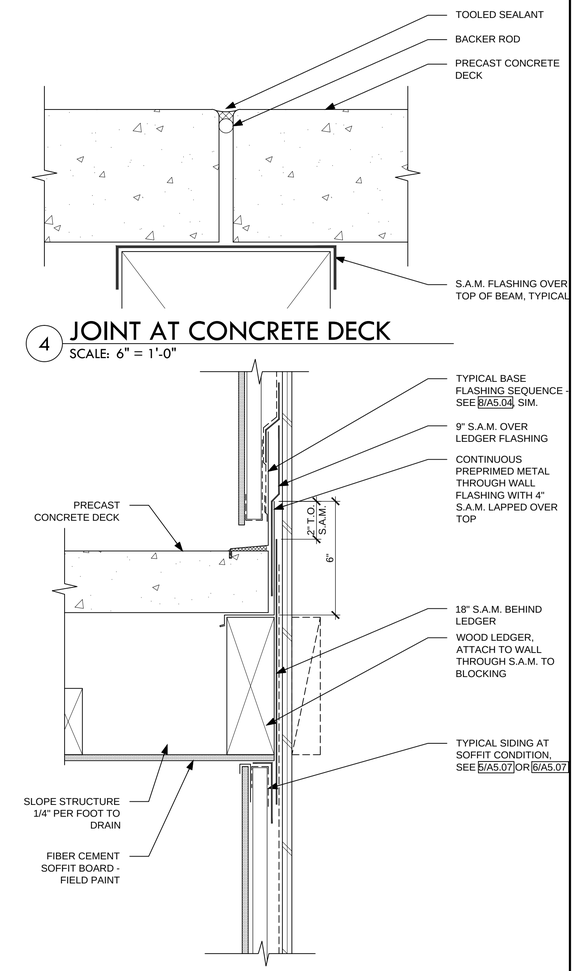

4 JOINT AT CONCRETE DECK
SCALE: 6" = 1'-0"

8 DECK LEDGER AT WALL
SCALE: 3" = 1'-0"

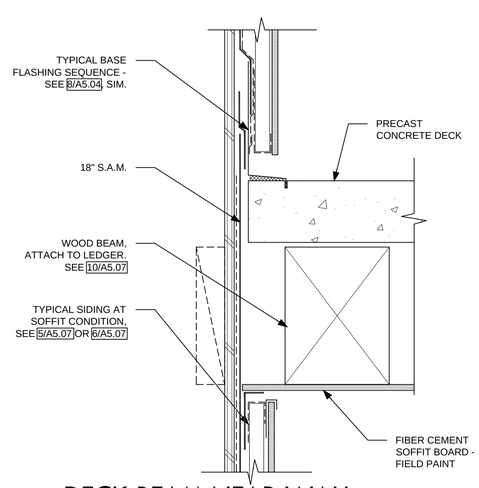

9 DECK BEAM NEAR WALL
SCALE: 3" = 1'-0"

REGISTERED ARCHITECT
BRIAN D. CARLETON
PORTLAND, OREGON
2918
STATE OF OREGON

CARLETON HART ARCHITECTURE
322 nw 8th avenue portland, oregon 97209
t 503 243 2252 | f 503 243 3261 | carletonhart.com

PARKWAY VILLAGE : EAST
APARTMENT REHABILITATION
SALEM HOUSING AUTHORITY

PERMIT REVIEW / BID SET

EXTERIOR DETAILS: DECKS

PROJ NO. 21348

01.21.14

A5.11

COPYRIGHT - CARLETON HART ARCHITECTURE DO NOT REPRODUCE WITHOUT PERMISSION

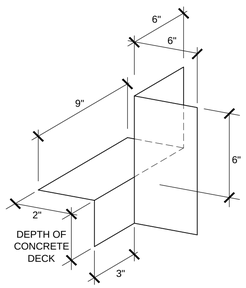

FLASHING PROFILE:
FULLY CLINCH LOCKED AND SEALED SADDLE FLASHING

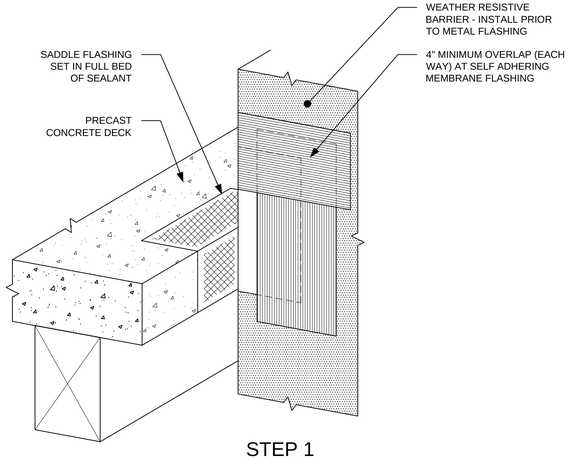

STEP 1

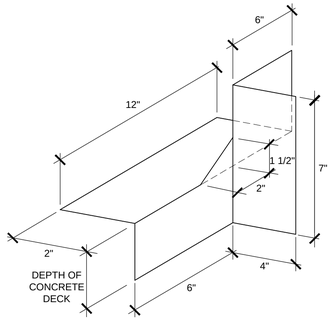

FLASHING PROFILE:
FULLY CLINCH LOCKED AND SEALED SADDLE FLASHING WITH HEMMED UPTURNED END DAM

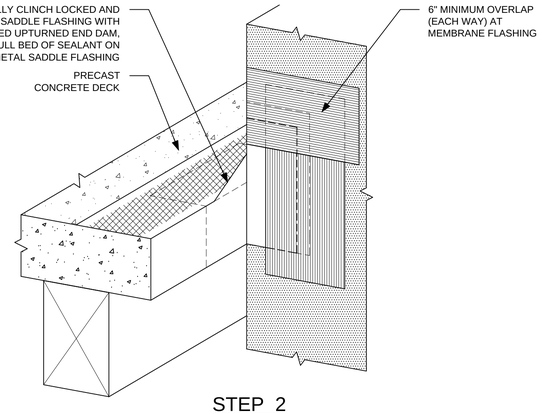

STEP 2

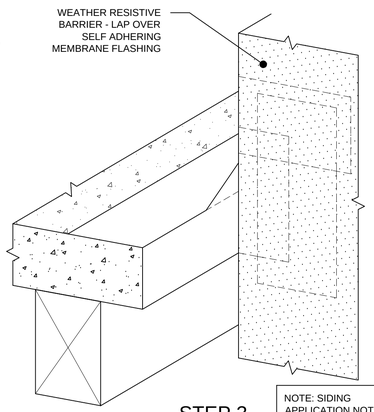

STEP 3

NOTE: SIDING APPLICATION NOT SHOWN FOR CLARITY

1 FLASHING AT DECK EDGE

SCALE: N.T.S.

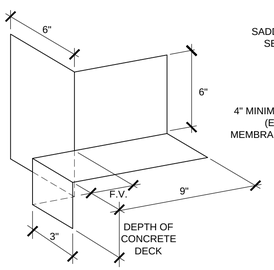

FLASHING PROFILE:
FULLY CLINCH LOCKED AND SEALED SADDLE FLASHING

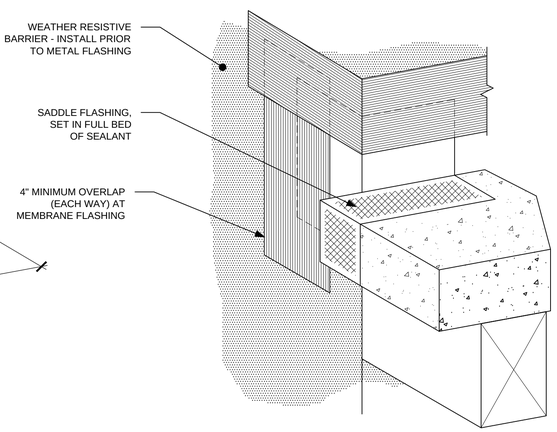

STEP 1

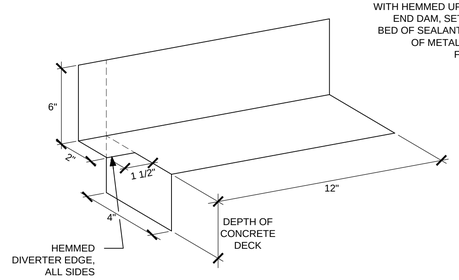

FLASHING PROFILE:
FULLY CLINCH LOCKED AND SEALED SADDLE FLASHING WITH HEMMED UPTURNED END DAM

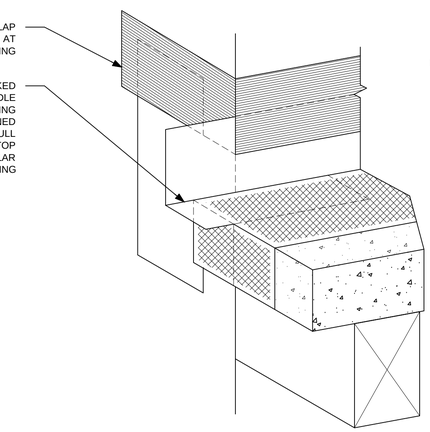

STEP 2

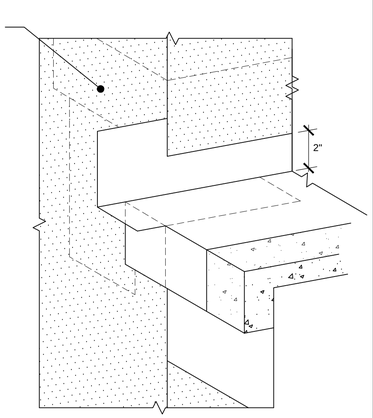

STEP 3

NOTE: SIDING APPLICATION NOT SHOWN FOR CLARITY

5 FLASHING AT DECK EDGE

SCALE: N.T.S.

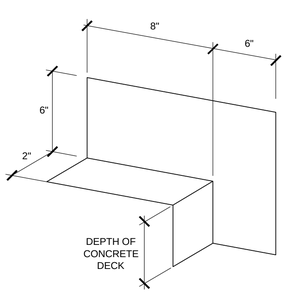

FLASHING PROFILE:
FULLY CLINCH LOCKED AND SEALED SADDLE FLASHING

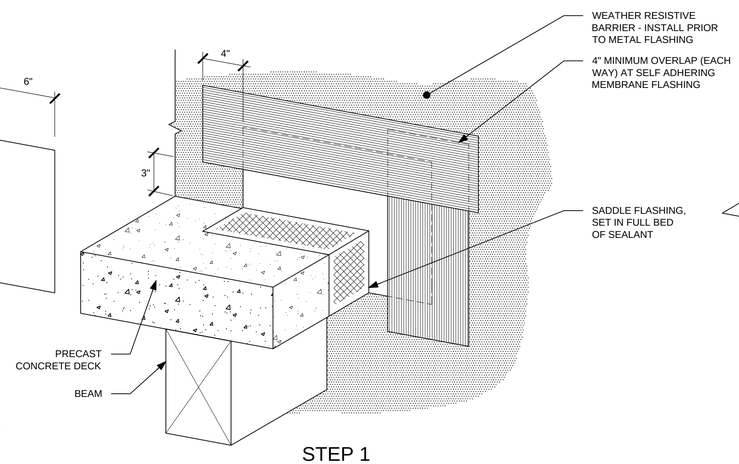

STEP 1

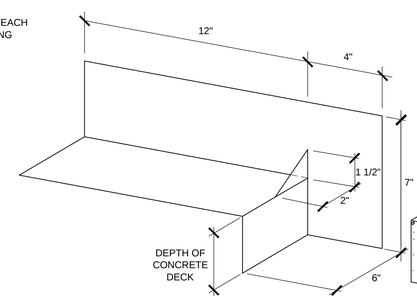

FLASHING PROFILE:
FULLY CLINCH LOCKED AND SEALED SADDLE FLASHING WITH HEMMED UPTURNED END DAM

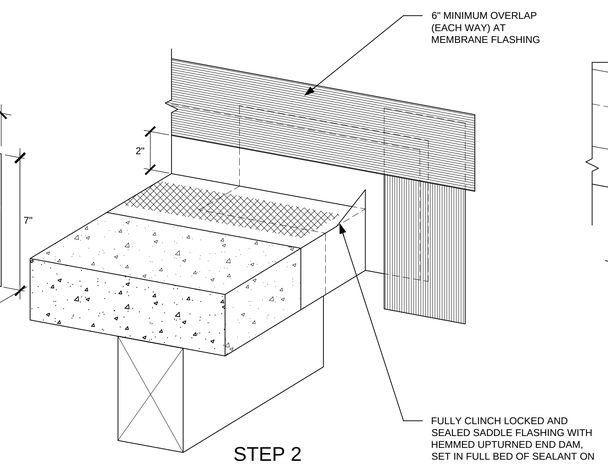

STEP 2

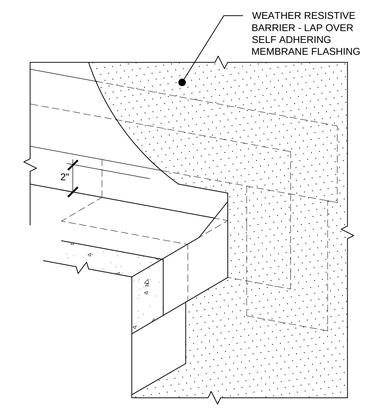

STEP 3

NOTE: SIDING APPLICATION NOT SHOWN FOR CLARITY

9 FLASHING AT DECK EDGE

SCALE: N.T.S.

REGISTERED ARCHITECT
BRIAN D. CARLETON
PORTLAND, OREGON
2918
STATE OF OREGON

CARLETON HART ARCHITECTURE
322 nw 8th avenue portland, oregon 97209
t 503 243 2262 | f 503 243 3261 | carletonhart.com

PARKWAY VILLAGE : EAST
APARTMENT REHABILITATION
SALEM HOUSING AUTHORITY

PERMIT REVIEW / BID SET

EXTERIOR DETAILS:
DECKS

PROJ NO.
21348

01.21.14

A5.12

COPYRIGHT - CARLETON HART ARCHITECTURE DO NOT REPRODUCE WITHOUT PERMISSION

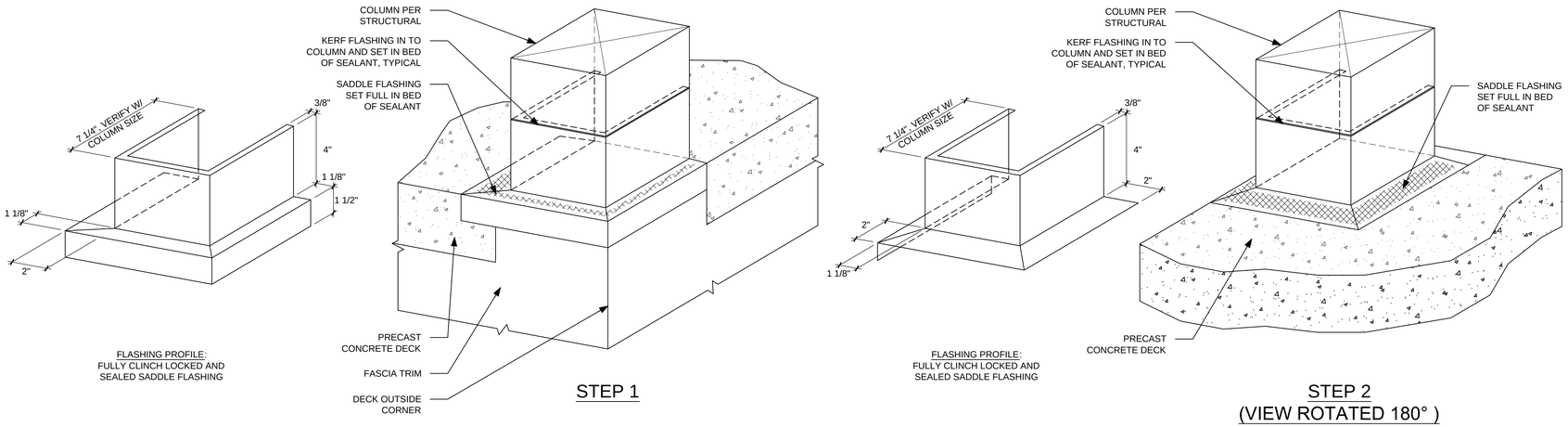

1 2-PIECE FLASHING AT DECK COLUMN
SCALE: N.T.S.

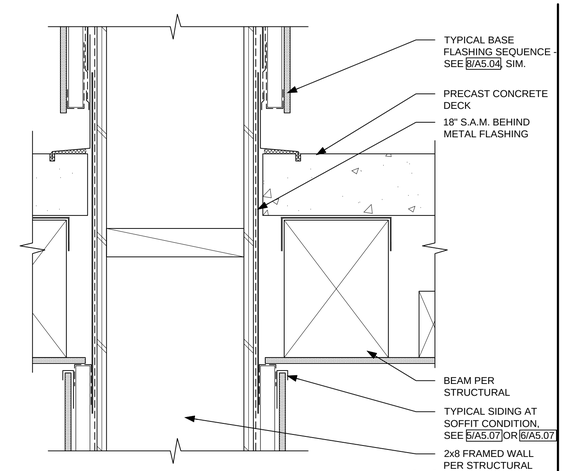

4 DIVIDER WALL AT DECK TYPE 'B'
SCALE: 3" = 1'-0"

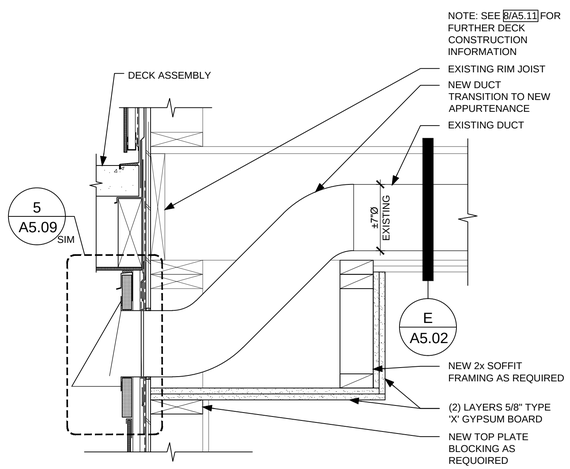

5 DUCT PENETRATION AT DECK
SCALE: 1-1/2" = 1'-0"

REGISTERED ARCHITECT
BRIAN D. CARLETON
PORTLAND, OREGON
2918
STATE OF OREGON

CARLETON HART ARCHITECTURE
322 nw 8th avenue portland, oregon 97209
t 503 243 2262 | f 503 243 3261 | carletonhart.com

PARKWAY VILLAGE : EAST
APARTMENT REHABILITATION
SALEM HOUSING AUTHORITY

PERMIT REVIEW / BID SET

EXTERIOR DETAILS: DECKS

PROJ NO. 21348

01.21.14

COPYRIGHT - CARLETON HART ARCHITECTURE DO NOT REPRODUCE WITHOUT PERMISSION

A5.13

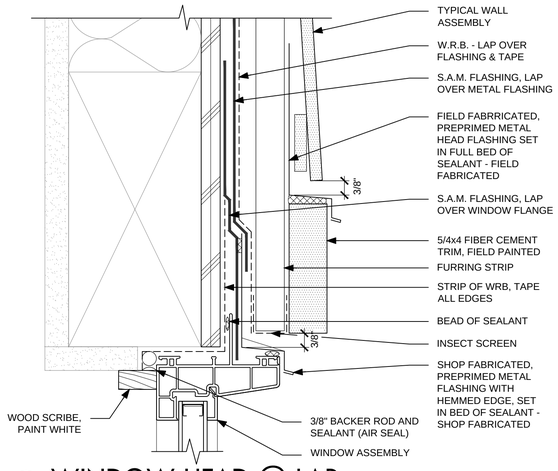

1 WINDOW HEAD @ LAP
SCALE: 6" = 1'-0"

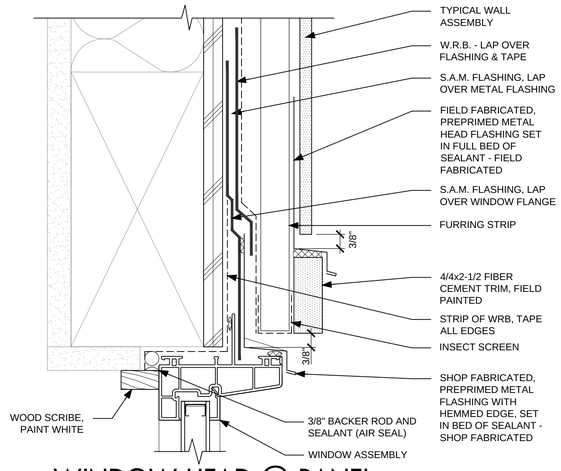

2 WINDOW HEAD @ PANEL
SCALE: 6" = 1'-0"

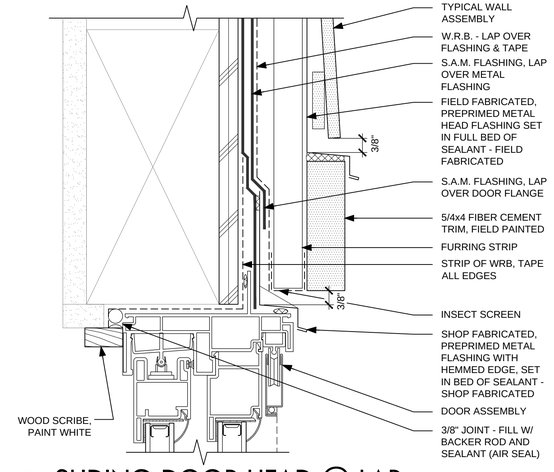

3 SLIDING DOOR HEAD @ LAP
SCALE: 6" = 1'-0"

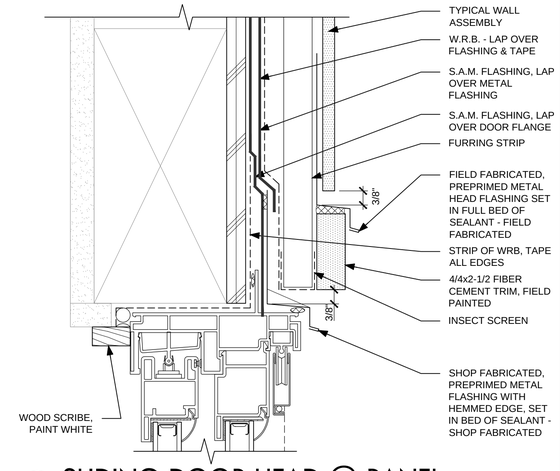

4 SLIDING DOOR HEAD @ PANEL
SCALE: 6" = 1'-0"

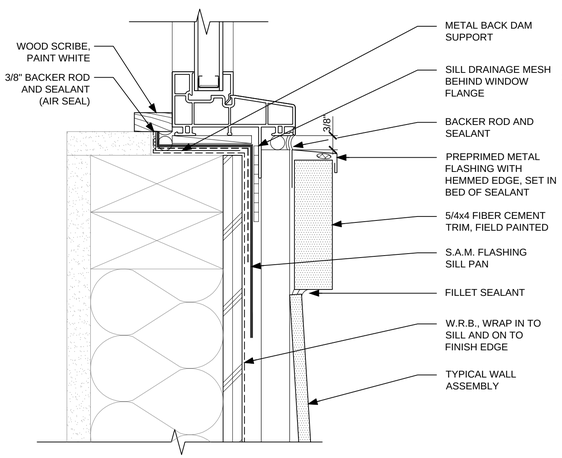

5 WINDOW SILL @ LAP
SCALE: 6" = 1'-0"

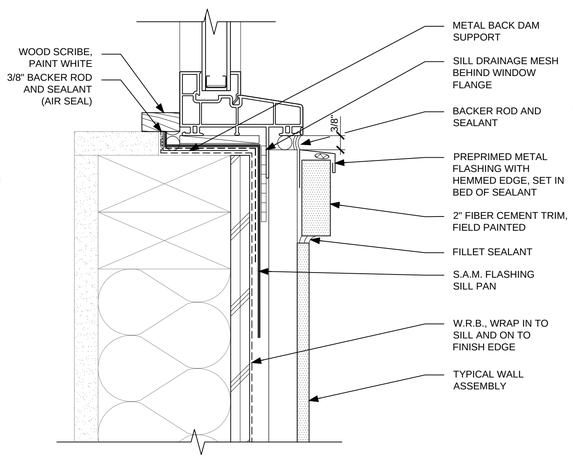

6 WINDOW SILL @ PANEL
SCALE: 6" = 1'-0"

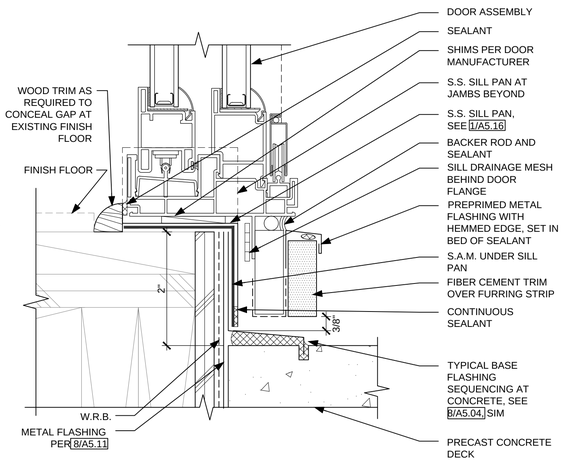

7 SLIDING DOOR THRESHOLD @ DECK
SCALE: 6" = 1'-0"

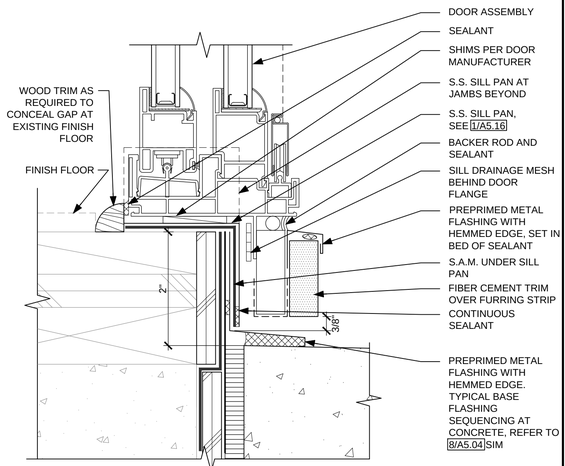

8 SLIDING DOOR THRESHOLD @ CONC.
SCALE: 6" = 1'-0"

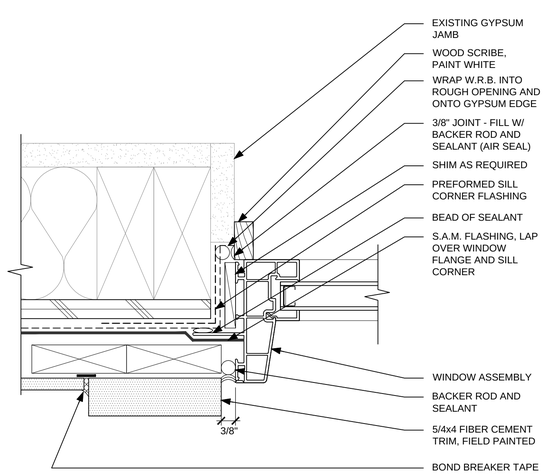

9 WINDOW JAMB @ LAP
SCALE: 6" = 1'-0"

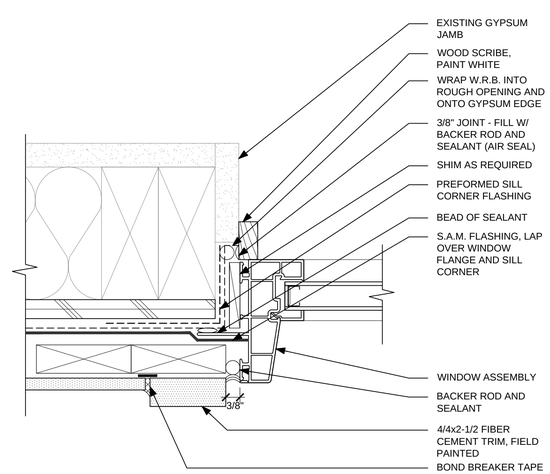

10 WINDOW JAMB @ PANEL
SCALE: 6" = 1'-0"

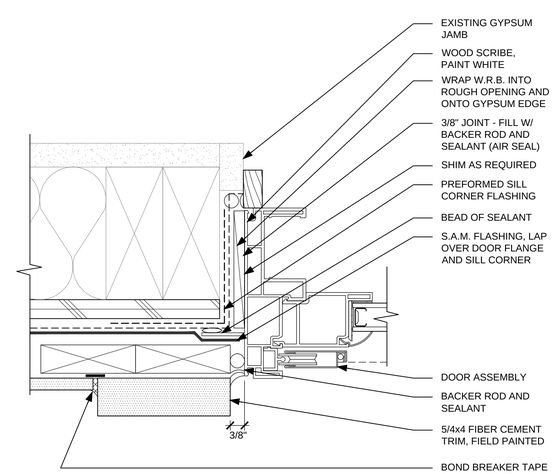

11 SLIDING DOOR JAMB @ LAP
SCALE: 6" = 1'-0"

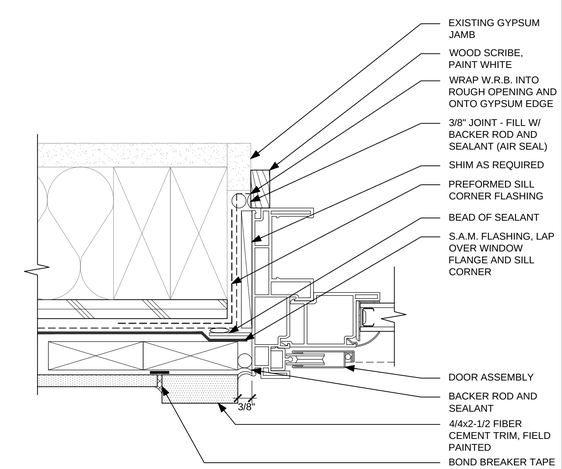

12 SLIDING DOOR JAMB @ PANEL
SCALE: 6" = 1'-0"

COPYRIGHT - CARLETON HART ARCHITECTURE DO NOT REPRODUCE WITHOUT PERMISSION

REGISTERED ARCHITECT
BRIAN D. CARLETON
PORTLAND, OREGON
2918
STATE OF OREGON

CARLETON HART ARCHITECTURE
322 nw 8th avenue portland, oregon 97209
t 503 243 2252 | f 503 243 3261 | carletonhart.com

PARKWAY VILLAGE : EAST
APARTMENT REHABILITATION
SALEM HOUSING AUTHORITY

PERMIT REVIEW / BID SET

EXTERIOR DETAILS:
DOORS & WINDOWS

PROJ NO.
21348

01.21.14

A5.14

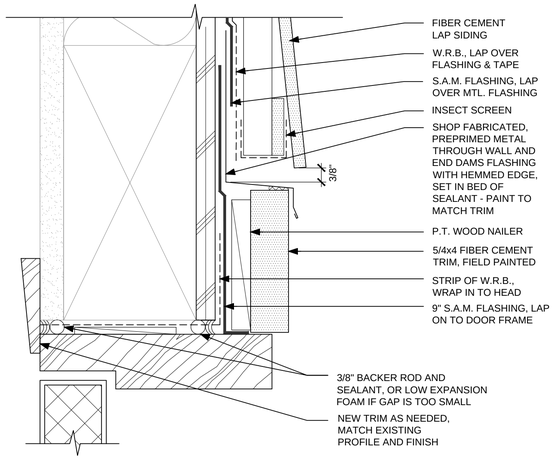

1 SWING DOOR HEAD @ LAP
SCALE: 6" = 1'-0"

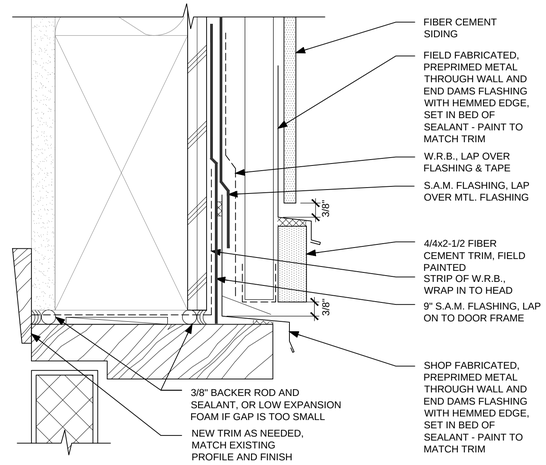

2 SWING DOOR HEAD @ PANEL
SCALE: 6" = 1'-0"

3 NOT USED
SCALE:

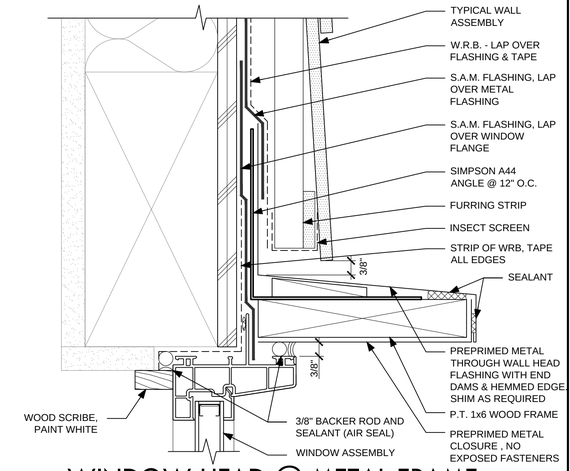

4 WINDOW HEAD @ METAL FRAME
SCALE: 6" = 1'-0"

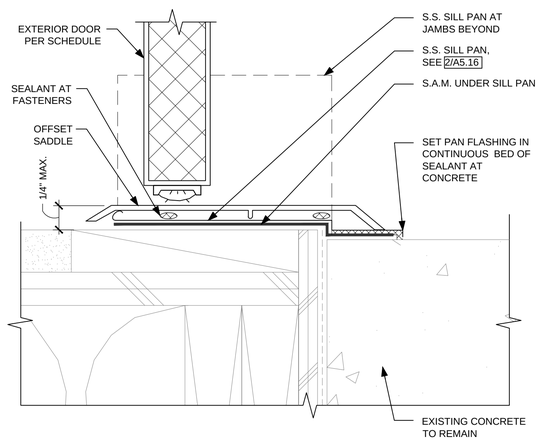

5 SWING DOOR THRESHOLD @ DECK
SCALE: 6" = 1'-0"

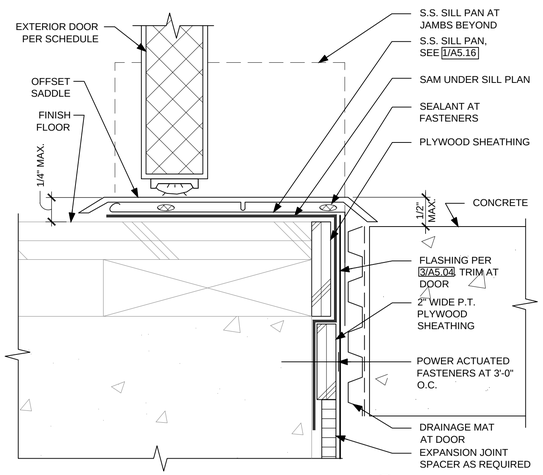

6 SWING DOOR THRESHOLD @ CONC.
SCALE: 6" = 1'-0"

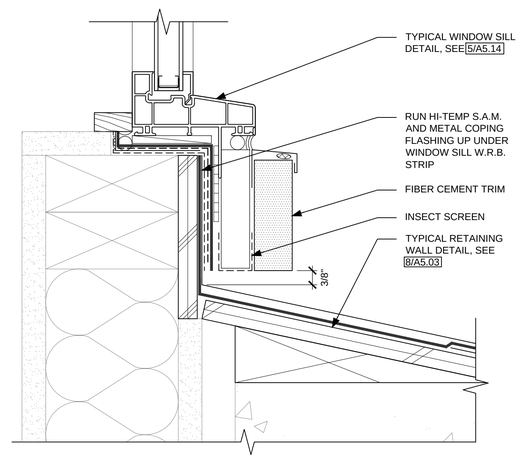

7 WINDOW SILL @ RETAINING WALL
SCALE: 6" = 1'-0"

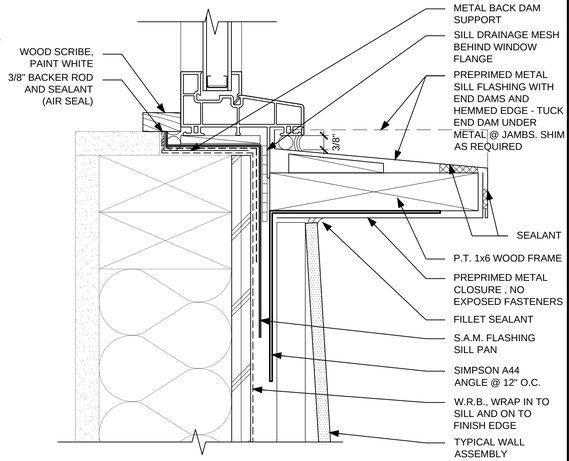

8 WINDOW SILL @ METAL FRAME
SCALE: 6" = 1'-0"

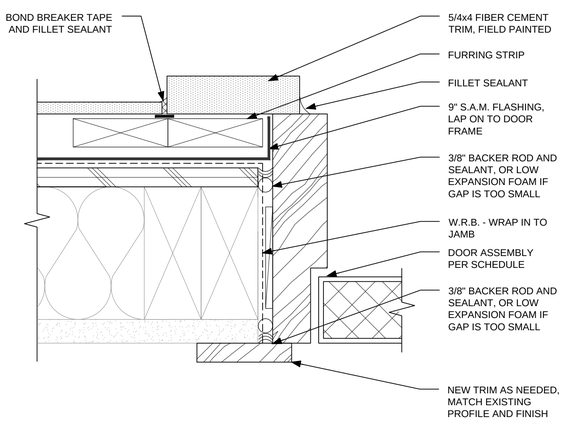

9 SWING DOOR JAMB @ LAP
SCALE: 6" = 1'-0"

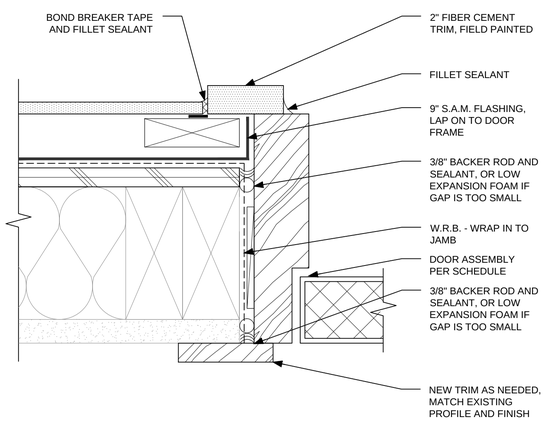

10 SWING DOOR JAMB @ PANEL
SCALE: 6" = 1'-0"

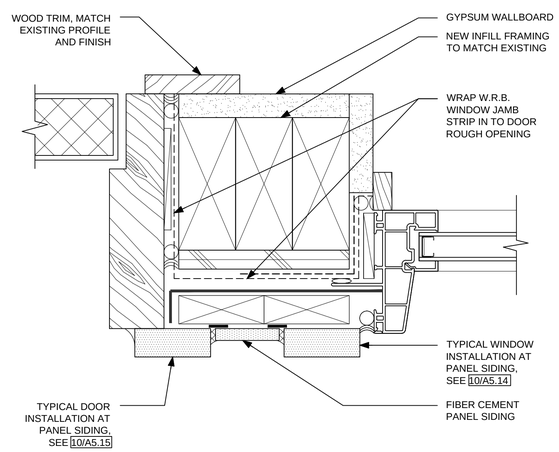

11 WINDOW JAMB @ SWING DOOR
SCALE: 6" = 1'-0"

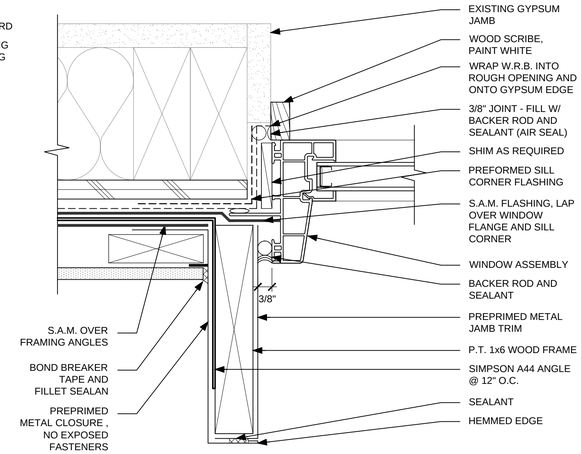

12 WINDOW JAMB @ METAL FRAME
SCALE: 6" = 1'-0"

COPYRIGHT - CARLETON HART ARCHITECTURE DO NOT REPRODUCE WITHOUT PERMISSION

REGISTERED ARCHITECT
BRIAN D. CARLETON
PORTLAND, OREGON
2918
STATE OF OREGON

CARLETON HART ARCHITECTURE
322 nw 8th avenue portland, oregon 97209
t 503 243 2252 | f 503 243 3261 | carletonhart.com

PARKWAY VILLAGE : EAST
APARTMENT REHABILITATION
SALEM HOUSING AUTHORITY

PERMIT REVIEW / BID SET

EXTERIOR DETAILS: DOORS & WINDOWS

PROJ NO. 21348

01.21.14

A5.15

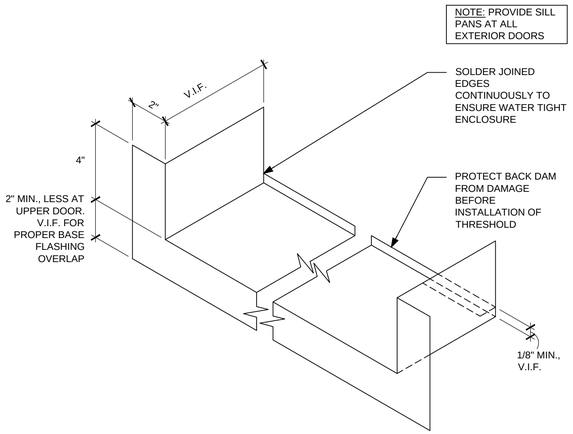

1 TYPICAL S.S. DOOR SILL PAN
SCALE: N.T.S.

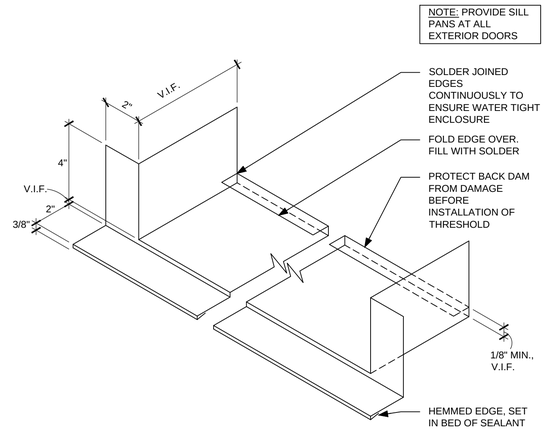

2 S.S. DOOR SILL PAN @ (E) CONCRETE
SCALE: N.T.S.

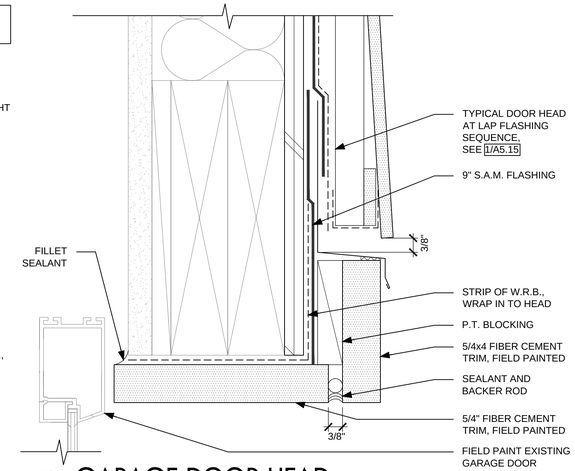

3 GARAGE DOOR HEAD
SCALE: 6" = 1'-0"

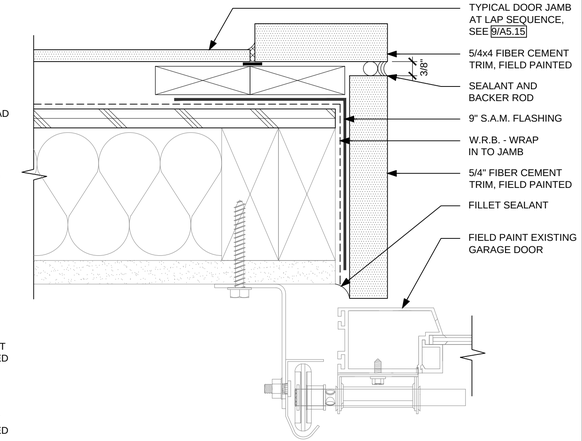

4 GARAGE DOOR JAMB
SCALE: 6" = 1'-0"

REGISTERED ARCHITECT
BRIAN D. CARLETON
PORTLAND, OREGON
2918
STATE OF OREGON

CARLETON HART ARCHITECTURE
322 nw 8th avenue portland, oregon 97209
t 503 243 2252 | f 503 243 3261 | carletonhart.com

PARKWAY VILLAGE : EAST
APARTMENT REHABILITATION
SALEM HOUSING AUTHORITY

PERMIT REVIEW / BID SET

EXTERIOR DETAILS:
DOORS & WINDOWS

PROJ NO.
21348

01.21.14

COPYRIGHT - CARLETON HART ARCHITECTURE DO NOT REPRODUCE WITHOUT PERMISSION

A5.16

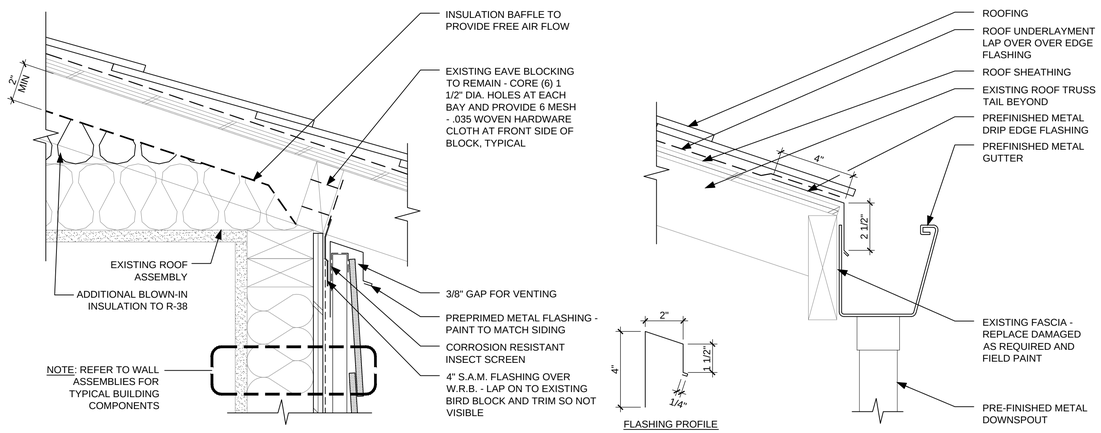

1 TYPICAL EAVE AND GUTTER
SCALE: 3" = 1'-0"

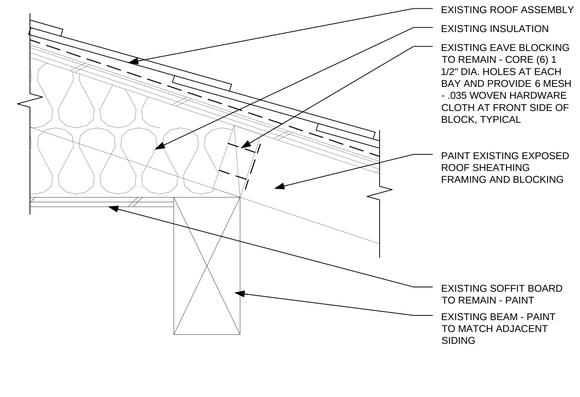

3 EAVE AT ROOF SOFFIT
SCALE: 3" = 1'-0"

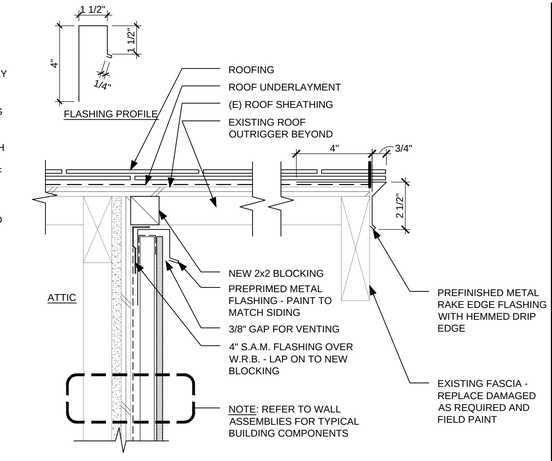

4 TYPICAL RAKE
SCALE: 3" = 1'-0"

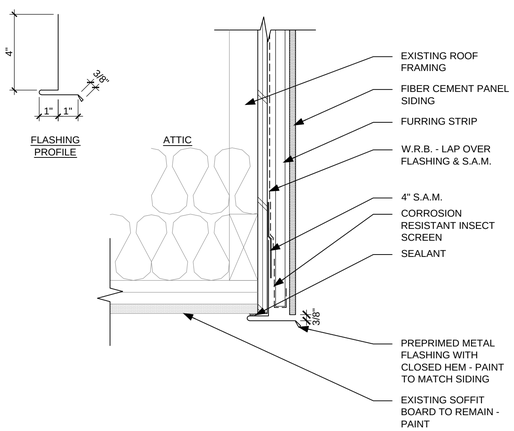

5 SIDING AT ROOF SOFFIT
SCALE: 3" = 1'-0"

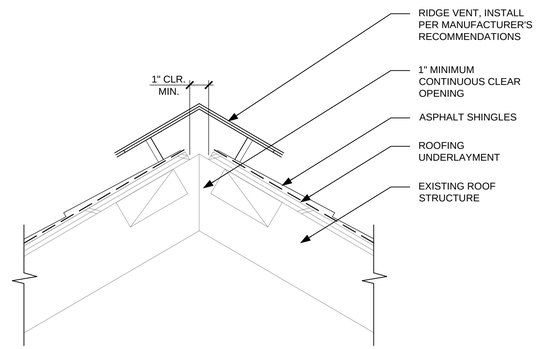

6 RIDGE VENT
SCALE: 3" = 1'-0"

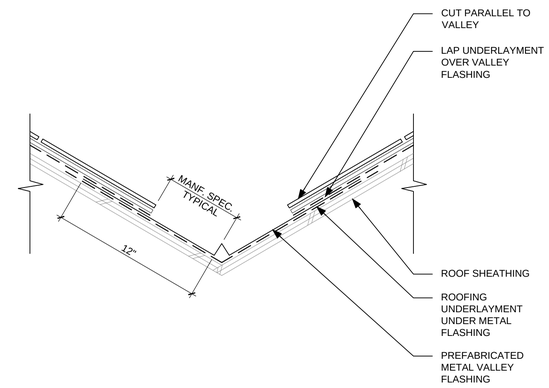

7 VALLEY FLASHING
SCALE: 3" = 1'-0"

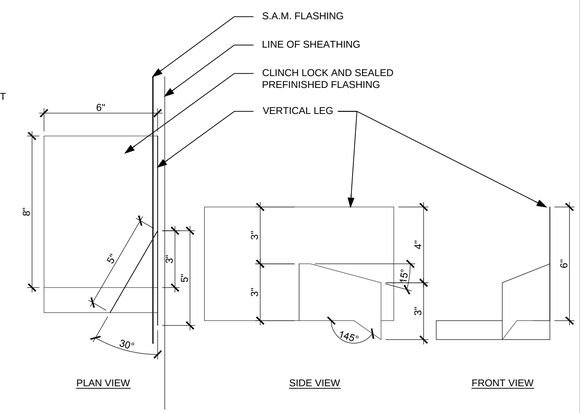

8 DIVERTER FLASHING PLAN AND ELEVS.
SCALE: 3" = 1'-0"

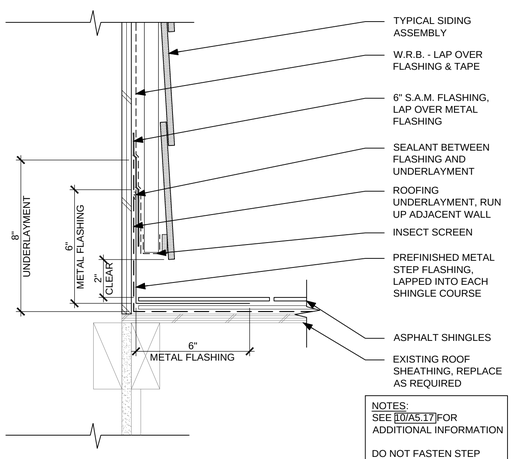

NOTES:
SEE 10/A5.17 FOR ADDITIONAL INFORMATION

DO NOT FASTEN STEP FLASHING TO WALL

9 STEP FLASHING
SCALE: 3" = 1'-0"

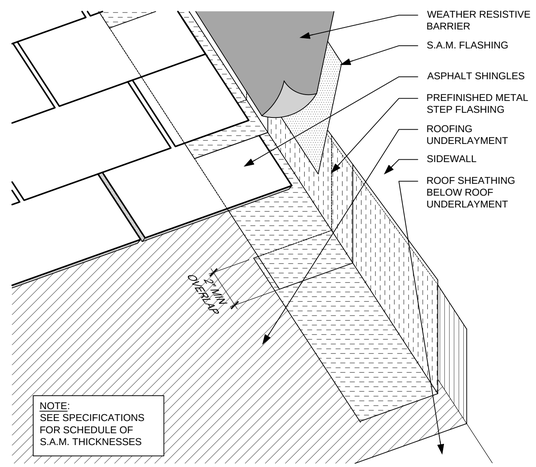

NOTE:
SEE SPECIFICATIONS FOR SCHEDULE OF S.A.M. THICKNESSES

10 STEP FLASHING AXON
SCALE: NTS

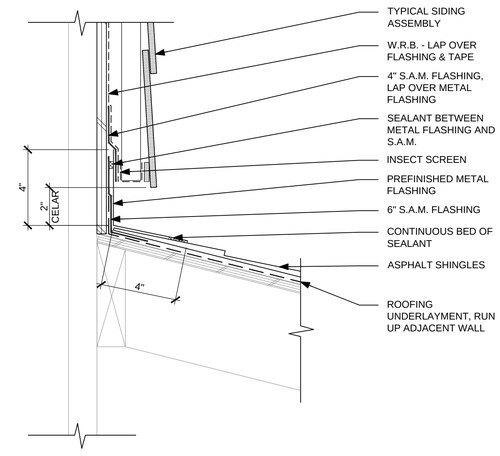

11 SLOPED ROOF TO WALL
SCALE: 3" = 1'-0"

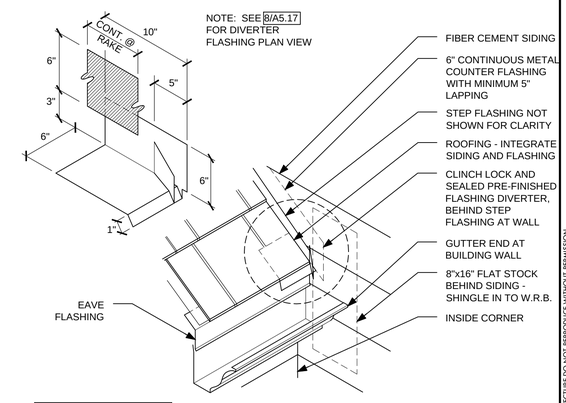

CONDITIONS MAY VARY. NOTIFY ARCHITECT IN WRITING, IMMEDIATELY IF DISCREPANCIES OCCUR.

12 DIVERTER FLSAHING
SCALE: 1 1/2" = 1'-0"

REGISTERED ARCHITECT
BRIAN D. CARLETON
PORTLAND, OREGON
2918
STATE OF OREGON

CARLETON HART ARCHITECTURE
322 nw 8th avenue portland, oregon 97209
t 503 243 2252 | f 503 243 3261 | carletonhart.com

PARKWAY VILLAGE : EAST
APARTMENT REHABILITATION
SALEM HOUSING AUTHORITY

PERMIT REVIEW / BID SET

EXTERIOR DETAILS: ROOF

PROJ NO. 21348

01.21.14

COPYRIGHT - CARLETON HART ARCHITECTURE DO NOT REPRODUCE WITHOUT PERMISSION

A5.17

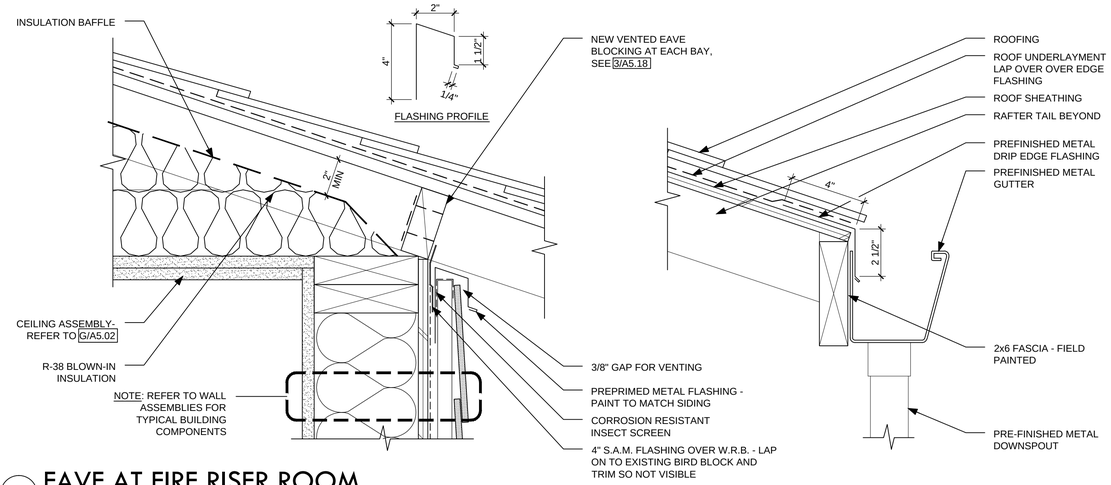

1 EAVE AT FIRE RISER ROOM
SCALE: 3" = 1'-0"

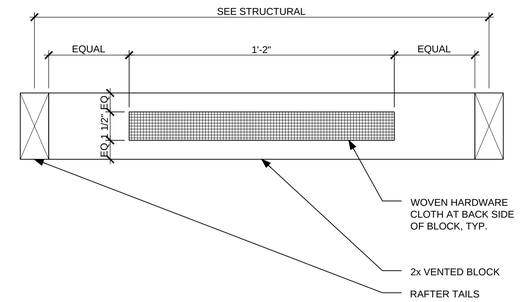

3 VENTED EAVE BLOCK
SCALE: 3" = 1'-0"

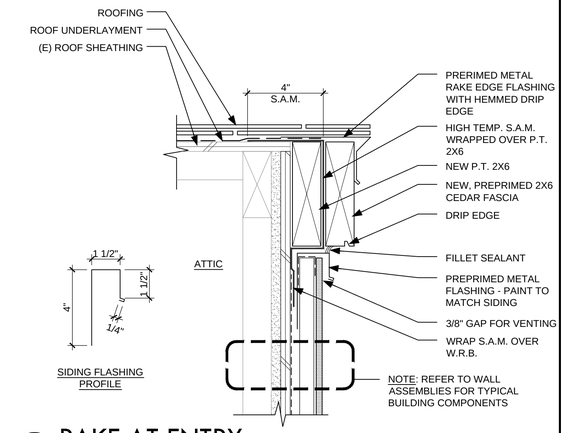

4 RAKE AT ENTRY
SCALE: 3" = 1'-0"

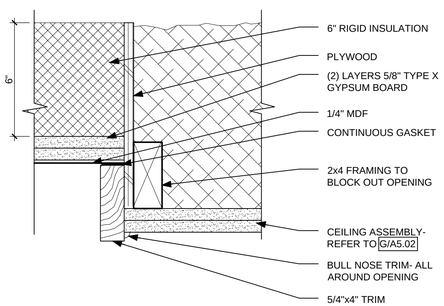

5 ATTIC ACCESS AT FIRE RISER ROOM
SCALE: 3" = 1'-0"

6 NOT USED
SCALE: NTS

7 NOT USED
SCALE: NTS

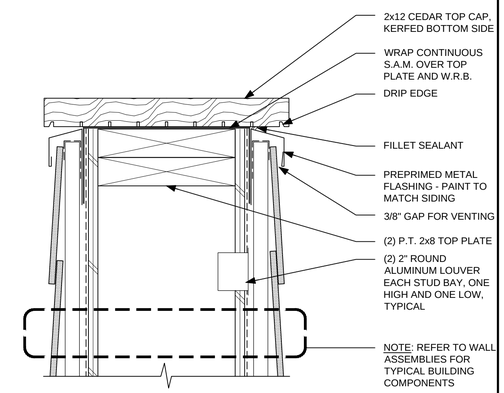

8 SCREEN WALL TOP CAP
SCALE: 3" = 1'-0"

REGISTERED ARCHITECT
BRIAN D. CARLETON
PORTLAND, OREGON
2918
STATE OF OREGON

CARLETON HART ARCHITECTURE
322 nw 8th avenue portland, oregon 97209
t 503 243 2252 | f 503 243 3261 | carletonhart.com

PARKWAY VILLAGE : EAST
APARTMENT REHABILITATION
SALEM HOUSING AUTHORITY

PERMIT REVIEW / BID SET

EXTERIOR DETAILS: ROOF

PROJ NO. 21348

01.21.14

A5.18

COPYRIGHT - CARLETON HART ARCHITECTURE DO NOT REPRODUCE WITHOUT PERMISSION

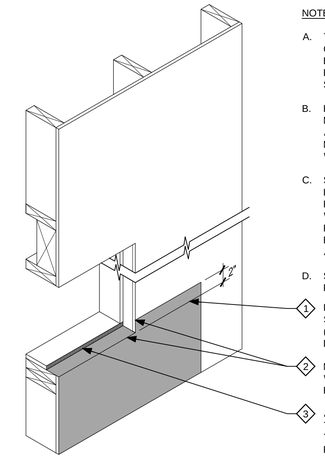

NOTES:

A. THIS METHOD DESCRIBES THE INSTALLATION OF WINDOWS WITH MOUNTING FLANGES BEFORE THE FIELD WEATHER RESISTIVE BARRIER IS APPLIED TO THE WALL SHEATHING.

B. ROUGH OPENING TO BE SIZED PER WINDOW MANUFACTURER'S INSTRUCTIONS, WITH ADJUSTMENTS TO ACCOMMODATE FLASHING MATERIALS & SHIMMING METHODS AT WINDOW SILL AND JAMBS.

C. SHIM SPACE TO BE 1/4" HIGH MIN. AT SILL - INCREASE AT PROJECTED WINDOWS AS REQUIRED FOR OPERATION CLEARANCES. WHERE THE USE OF A 1/4" MIN. SHIM PROHIBITS WINDOW INSTALLATION IN AN EXISTING ROUGH OPENING, IT IS ACCEPTABLE TO USE 1/8" HIGH MIN. SHIMS.

D. SET HEADS OF SHEATHING FASTENERS FLUSH TO FACE OF SHEATHING.

1. INSTALL W.R.B. STRIP OVER SHEATHING AT SILL. TOP OF W.R.B. TO BE ~2" ABOVE SILL (FIELD VERIFY SO THAT W.R.B. WRAPS FULL DEPTH OF SILL).
2. MAKE VERTICAL CUT IN W.R.B. AT JAMBS, USE W.R.B.-COMPATIBLE SPRAY ADHESIVE AND FOLD W.R.B. INTO SILL.
3. APPLY W.R.B. SHEATHING TAPE FROM W.R.B. TO FACE OF EXISTING SILL FINISH RETURN. TOP OF TAPE IS TO BE LEVEL WITH TOP OF FINISH.

1 STEP 1 - W.R.B. INSTALLATION
SCALE: N.T.S.

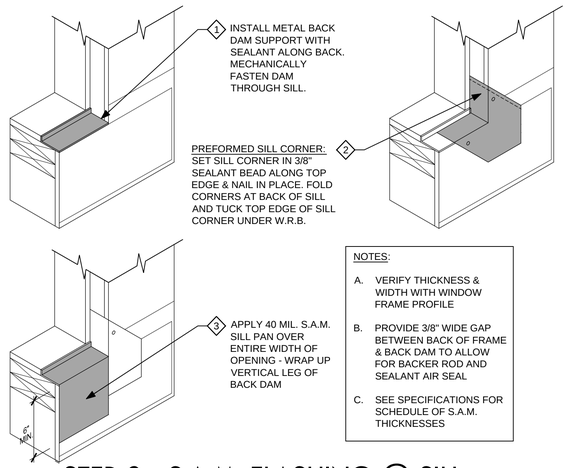

1. INSTALL METAL BACK DAM SUPPORT WITH SEALANT ALONG BACK. MECHANICALLY FASTEN DAM THROUGH SILL.

PREFORMED SILL CORNER: SET SILL CORNER IN 3/8" SEALANT BEAD ALONG TOP EDGE & NAIL IN PLACE. FOLD CORNERS AT BACK OF SILL AND TUCK TOP EDGE OF SILL CORNER UNDER W.R.B.

2.

3. APPLY 40 MIL. S.A.M. SILL PAN OVER ENTIRE WIDTH OF OPENING - WRAP UP VERTICAL LEG OF BACK DAM

NOTES:

A. VERIFY THICKNESS & WIDTH WITH WINDOW FRAME PROFILE

B. PROVIDE 3/8" WIDE GAP BETWEEN BACK OF FRAME & BACK DAM TO ALLOW FOR BACKER ROD AND SEALANT AIR SEAL

C. SEE SPECIFICATIONS FOR SCHEDULE OF S.A.M. THICKNESSES

2 STEP 2 - S.A.M. FLASHING @ SILL
SCALE: N.T.S.

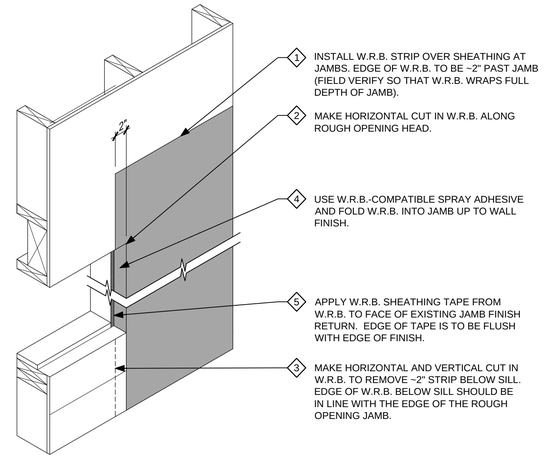

1. INSTALL W.R.B. STRIP OVER SHEATHING AT JAMBS. EDGE OF W.R.B. TO BE ~2" PAST JAMB (FIELD VERIFY SO THAT W.R.B. WRAPS FULL DEPTH OF JAMB).
2. MAKE HORIZONTAL CUT IN W.R.B. ALONG ROUGH OPENING HEAD.
4. USE W.R.B.-COMPATIBLE SPRAY ADHESIVE AND FOLD W.R.B. INTO JAMB UP TO WALL FINISH.
5. APPLY W.R.B. SHEATHING TAPE FROM W.R.B. TO FACE OF EXISTING JAMB FINISH RETURN. EDGE OF TAPE IS TO BE FLUSH WITH EDGE OF FINISH.
3. MAKE HORIZONTAL AND VERTICAL CUT IN W.R.B. TO REMOVE ~2" STRIP BELOW SILL. EDGE OF W.R.B. BELOW SILL SHOULD BE IN LINE WITH THE EDGE OF THE ROUGH OPENING JAMB.

3 STEP 3 - W.R.B. FOLDED @ JAMBS
SCALE: N.T.S.

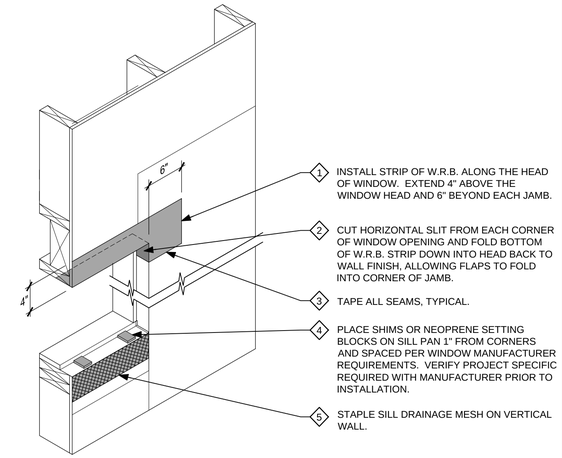

1. INSTALL STRIP OF W.R.B. ALONG THE HEAD OF WINDOW. EXTEND 4" ABOVE THE WINDOW HEAD AND 6" BEYOND EACH JAMB.
2. CUT HORIZONTAL SLIT FROM EACH CORNER OF WINDOW OPENING AND FOLD BOTTOM OF W.R.B. STRIP DOWN INTO HEAD BACK TO WALL FINISH, ALLOWING FLAPS TO FOLD INTO CORNER OF JAMB.
3. TAPE ALL SEAMS, TYPICAL.
4. PLACE SHIMS OR NEOPRENE SETTING BLOCKS ON SILL PAN 1" FROM CORNERS AND SPACED PER WINDOW MANUFACTURER REQUIREMENTS. VERIFY PROJECT SPECIFIC REQUIRED WITH MANUFACTURER PRIOR TO INSTALLATION.
5. STAPLE SILL DRAINAGE MESH ON VERTICAL WALL.

4 STEP 4 - W.R.B. WRAP @ HEAD
SCALE: N.T.S.

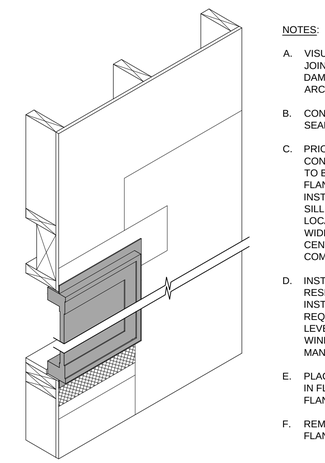

NOTES:

A. VISUALLY INSPECT WINDOW FRAME, MITER JOINTS & MOUNTING FLANGES FOR CRACKS, DAMAGE & INPROPER SEALS - NOTIFY ARCHITECT IF OCCURS.

B. CONSULT MANUFACTURER'S INSTRUCTIONS FOR SEALING OF NON-INTEGRAL NAIL FLANGES.

C. PRIOR TO SETTING WINDOW, APPLY A CONTINUOUS 3/8" DIAMETER BEAD OF SEALANT TO BACK SIDE OF HEAD AND JAMB MOUNTING FLANGES, CENTERED OVER NAIL HOLES. INSTALL AN INTERMITTENT BEAD OF SEALANT AT SILL FLANGE LEAVING (2) 2" GAPS FOR DRAINAGE LOCATED AT THE CORNERS. AT WINDOWS WIDER THAN 4'-0", ADD A THIRD 2" GAP AT THE CENTER OF THE WINDOW. VERIFY SEALANT COMPATIBILITY W/ FLASHING MATERIALS.

D. INSTALL & FASTEN WINDOW WITH CORROSION RESISTANT FASTENERS PER MANUFACTURER'S INSTRUCTIONS - SHIM AND ADJUST AS REQUIRED. TO ACHIEVE SQUARE, PLUMB & LEVEL. CONFIRM FASTENING METHOD AT WINDOW FLANGES IN WRITING WITH MANUFACTURER.

E. PLACE FASTENERS AT CENTER OF HOLES/SLOTS IN FLANGE. SET FASTENER HEADS FLUSH WITH FLANGE BUT NOT TIGHT (DO NOT BEND OVER).

F. REMOVE EXCESS FLANGE SEALANT FROM FLANGE SURFACE.

5 STEP 5 - WINDOW INSTALLATION
SCALE: N.T.S.

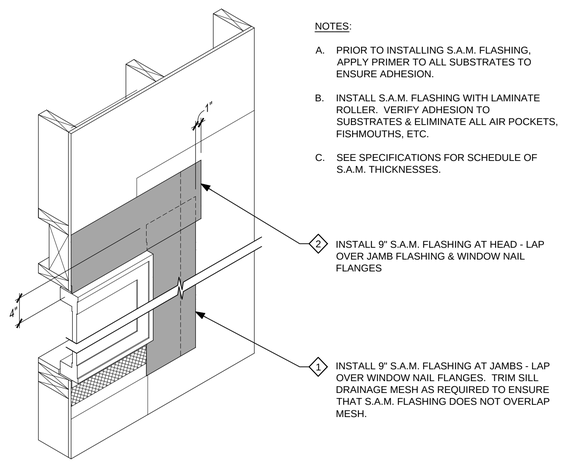

NOTES:

A. PRIOR TO INSTALLING S.A.M. FLASHING, APPLY PRIMER TO ALL SUBSTRATES TO ENSURE ADHESION.

B. INSTALL S.A.M. FLASHING WITH LAMINATE ROLLER. VERIFY ADHESION TO SUBSTRATES & ELIMINATE ALL AIR POCKETS, FISHMOUTHS, ETC.

C. SEE SPECIFICATIONS FOR SCHEDULE OF S.A.M. THICKNESSES.

2. INSTALL 9" S.A.M. FLASHING AT HEAD - LAP OVER JAMB FLASHING & WINDOW NAIL FLANGES

1. INSTALL 9" S.A.M. FLASHING AT JAMBS - LAP OVER WINDOW NAIL FLANGES. TRIM SILL DRAINAGE MESH AS REQUIRED TO ENSURE THAT S.A.M. FLASHING DOES NOT OVERLAP MESH.

6 STEP 6 - S.A.M. FLASHING
SCALE: N.T.S.

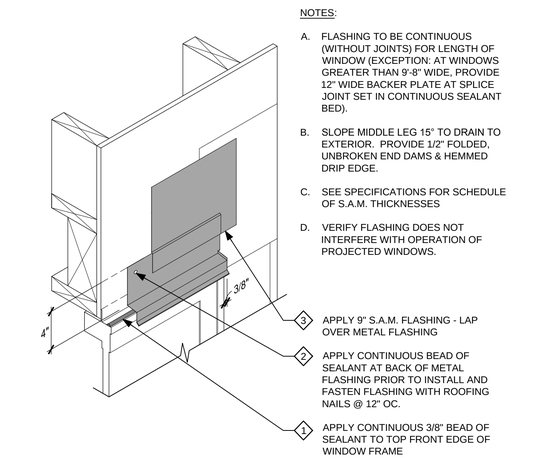

NOTES:

A. FLASHING TO BE CONTINUOUS (WITHOUT JOINTS) FOR LENGTH OF WINDOW (EXCEPTION: AT WINDOWS GREATER THAN 9'-8" WIDE, PROVIDE 12" WIDE BACKER PLATE AT SPLICE JOINT SET IN CONTINUOUS SEALANT BED).

B. SLOPE MIDDLE LEG 15° TO DRAIN TO EXTERIOR. PROVIDE 1/2" FOLDED, UNBROKEN END DAMS & HEMMED DRIP EDGE.

C. SEE SPECIFICATIONS FOR SCHEDULE OF S.A.M. THICKNESSES

D. VERIFY FLASHING DOES NOT INTERFERE WITH OPERATION OF PROJECTED WINDOWS.

3. APPLY 9" S.A.M. FLASHING - LAP OVER METAL FLASHING
2. APPLY CONTINUOUS BEAD OF SEALANT AT BACK OF METAL FLASHING PRIOR TO INSTALL AND FASTEN FLASHING WITH ROOFING NAILS @ 12" OC.
1. APPLY CONTINUOUS 3/8" BEAD OF SEALANT TO TOP FRONT EDGE OF WINDOW FRAME

7 STEP 7: HEAD FLASHING
SCALE: N.T.S.

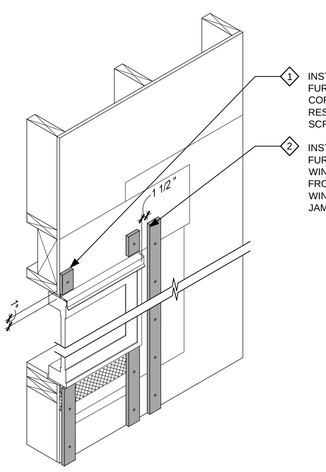

1. INSTALL RAINSCREEN FURRING AND CORROSION RESISTANCE INSECT SCREENING
2. INSTALL RAINSCREEN FURRING FOR WINDOW TRIM 1 1/2" FROM EDGE OF WINDOW FRAME JAMB

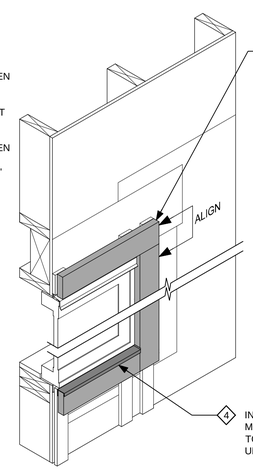

5. INSTALL WINDOW TRIM OVER RAINSCREEN FURRING, BLIND CAULK ALL TRIM TO TRIM JOINTS

4. INSTALL CONTINUOUS METAL FLASHING TO TOP OF SILL TRIM, UNDER WINDOW SILL

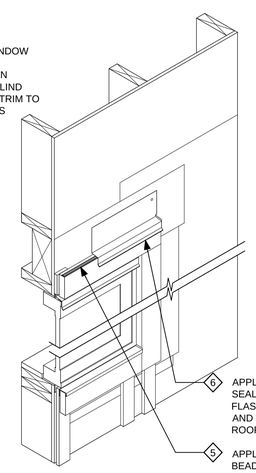

6. APPLY CONTINUOUS BEAD OF SEALANT AT BACK OF METAL FLASHING PRIOR TO INSTALL AND FASTEN FLASHING WITH ROOFING NAILS @ 12" OC.
5. APPLY CONTINUOUS 3/8" BEAD OF SEALANT TO TOP FRONT EDGE OF WINDOW TRIM

8 STEP 8 - FURRING STRIPS & FLASHINGS
SCALE: N.T.S.

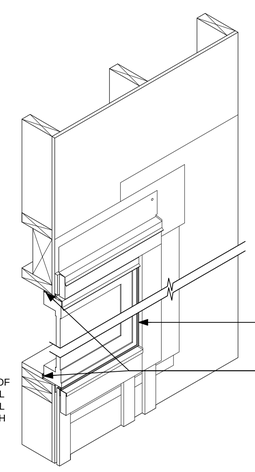

1. INSTALL EXTERIOR BACKER ROD & SEALANT BETWEEN WINDOW FRAME & TRIM ALONG JAMBS & SILL
2. INSTALL INTERIOR BACKER ROD & SEALANT BETWEEN WINDOW FRAME & W.R.B. SHEATHING TAPE ALONG ENTIRE PERIMETER OF WINDOW.

9 STEP 9 - SEALANT @ INT. & EXT.
SCALE: N.T.S.

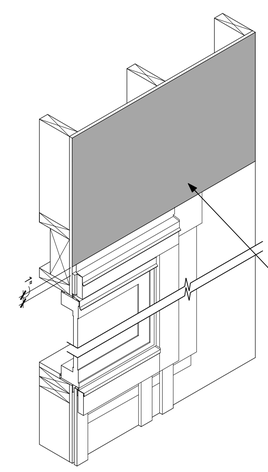

IMPORTANT! WINDOW MANF.'S INSTALLATION INSTRUCTIONS MUST BE COORDINATED WITH THESE DETAILS. REVIEW INSTRUCTIONS FOR ROUGH OPENING SIZES, FLASHINGS, SEALANTS, MOUNTING, & SHIMMING METHODS PRIOR TO ROUGH FRAMING LAYOUT. ALL VARIANCES FROM MANF.'S INSTRUCTIONS SHALL BE REVIEWED WITH ARCHITECT & MANF. AND DOCUMENTED IN WRITING.

NOTES:

A. VERIFY SEALANT COMPATIBILITY & ADHESION W/ ALL SUBSTRATES

B. BACKER RODS TO BE SIZED 30% WIDER THAN JOINT

1. INSTALL FIELD W.R.B. AT HEAD. LAP OVER TOP EDGES OF S.A.M. & VERTICAL LEG OF METAL HEAD FLASHING. TAPE ALL LAP EDGES AND HOLES FROM TEMPORARY FASTENERS.

10 STEP 10 - W.R.B. LAP @ HEAD
SCALE: N.T.S.

COPYRIGHT - CARLETON HART ARCHITECTURE DO NOT REPRODUCE WITHOUT PERMISSION

REGISTERED ARCHITECT
BRIAN D. CARLETON
PORTLAND, OREGON
2918
STATE OF OREGON

CARLETON HART ARCHITECTURE
322 nw 8th avenue portland, oregon 97209
t 503 243 2252 | f 503 243 3261 | carletonhart.com

PARKWAY VILLAGE : EAST
APARTMENT REHABILITATION
SALEM HOUSING AUTHORITY

PERMIT REVIEW / BID SET

WINDOW INSTALLATION SEQUENCE

PROJ NO. 21348

01.21.14

A5.21

DOOR AND FRAME SCHEDULE

	DOOR MARK	LOCATION	DOOR TYPE	DOOR SIZE WIDTH	DOOR SIZE HEIGHT	DOOR SIZE THICK	DOOR LEAVES	DOOR MATERIAL	DOOR CORE	DOOR FINISH	DOOR GLAZING	DOOR LOUVER WIDTH	DOOR LOUVER HEIGHT	FRAME TYPE	FRAME MATERIAL	FRAME GLAZING	FIRE RATING	HARDWARE SET NO	HARDWARE KEYSIDE RM NO	REMARKS
DWELLING UNITS	01	UNIT ENTRY	XA	3'-0"	6'-8"	1 3/4"	1	FGL	SC	PAINT	-	-	-	COMPOSITE	-	-	20 MIN	01		
	02	PATIO	XB	3'-0"	6'-8"	1 3/4"	2	FGL	-	PAINT	SG	-	-	COMPOSITE	-	-	-	07		
	03	DECK	XC	6'-0"	6'-8"	1 3/4"	2	VINYL	-	MANF	SG	-	-	VINYL	-	-	-	-		
	04	BEDROOM / BATHROOM	A	3'-0"	6'-8"	1 3/8"	1	WOOD	HC	PAINT	-	-	-	WOOD	-	-	-	02 / 03		
	05	LAUNDRY (BI-FOLD)	C	5'-3"	6'-8"	1 3/8"	2	WOOD	HC	PAINT	-	-	-	WOOD	-	-	-	04		
	06	CLOSET (BI-PASS)	D	6'-0"	6'-8"	1 3/8"	2	WOOD	HC	PAINT	-	-	-	WOOD	-	-	-	04		
	07	CLOSET / LINEN (BI-PASS)	D	5'-0"	6'-8"	1 3/8"	2	WOOD	HC	PAINT	-	-	-	WOOD	-	-	-	04		
	08	CLOSET (BI-PASS)	D	4'-0"	6'-8"	1 3/8"	2	WOOD	HC	PAINT	-	-	-	WOOD	-	-	-	04		
	09	HALL CLOSET (BI-FOLD)	B	1'-10"	6'-8"	1 3/8"	2	WOOD	HC	PAINT	-	-	-	WOOD	-	-	-	04		
	10	CLOSET (BI-FOLD)	B	3'-0"	6'-8"	1 3/8"	2	WOOD	HC	PAINT	-	-	-	WOOD	-	-	-	04		
	11	CLOSET (TRI-PASS)	E	7'-5"	6'-8"	1 3/8"	3	WOOD	HC	PAINT	-	-	-	WOOD	-	-	-	04		
	12	CLOSET (TRI-PASS)	E	8'-0"	6'-8"	1 3/8"	3	WOOD	HC	PAINT	-	-	-	WOOD	-	-	-	04		
	13	WATER HEATER (BI-FOLD)	B	2'-4"	6'-8"	1 3/8"	2	WOOD	HC	PAINT	-	-	-	WOOD	-	-	-	04		
	14	CLOSET (BI-PASS)	B	5'-8"	6'-8"	1 3/8"	2	WOOD	HC	PAINT	-	-	-	WOOD	-	-	-	04		
COMMON	101	MAIN ENTRANCE	XB	3'-0"	6'-8"	1 3/4"	1	FGL	SC	PAINT	SG	-	-	COMPOSITE	-	-	-	01		
	102	SIDE ENTRANCE	XB	3'-0"	6'-8"	1 3/4"	1	FGL	SC	PAINT	SG	-	-	COMPOSITE	-	-	-	01		
	103	FIRE RISER	XA	3'-0"	6'-8"	1 3/4"	1	FGL	-	PAINT	-	-	-	COMPOSITE	-	-	20 MIN	06		
	104	GARAGE (OVERHEAD)	-	EXIST	EXIST	EXIST	EXIST	EXIST	EXIST	PAINT	-	-	-	-	-	-	-	-		
	105	GARAGE	XA	3'-0"	6'-8"	1 3/4"	1	FGL	SC	PAINT	-	-	-	COMPOSITE	-	-	-	01		

3 DOOR SCHEDULE
SCALE: NOT TO SCALE

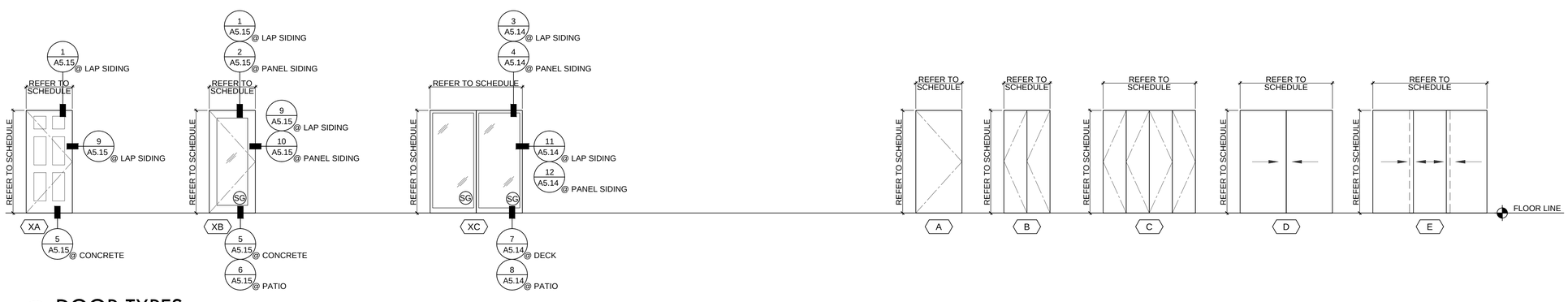

2 DOOR TYPES
SCALE: NOT TO SCALE

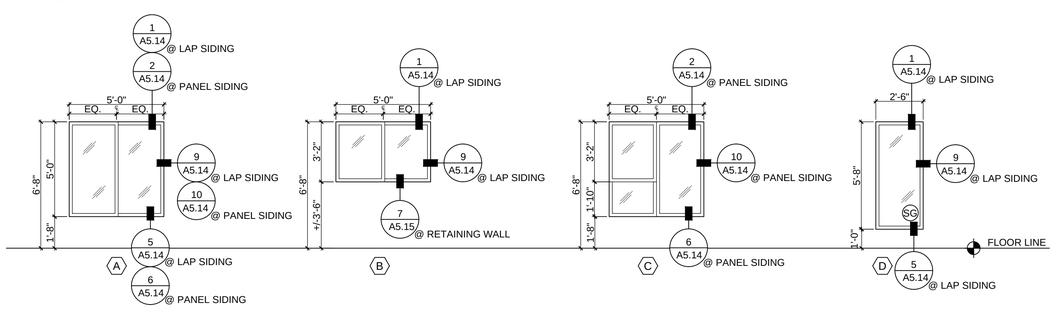

1 WINDOW TYPES
SCALE: NOT TO SCALE

GENERAL DOOR / WINDOW NOTES

A. COORDINATE ROUGH OPENING FRAMING, FINISHES/FINISH CARPENTRY, AND OPENING HARDWARE WITH MANEUVERING CLEARANCES, LEVEL CHANGES, THRESHOLDS WITH CURRENT ACCESSIBILITY STANDARDS.

B. COORDINATE REQUIRED UNDERCUT OF EACH SCHEDULED DOOR WITH FINISH FLOORING TRANSITION AND MAKE-UP AIR REQUIREMENTS OF ROOM.

C. FIELD VERIFICATION OF ALL EXISTING WINDOW OPENING DIMENSIONS AND QUANTITIES IS REQUIRED PRIOR TO SUBMISSION OF ANY SHOP DRAWINGS, PRODUCT DATA, SAMPLES, OR OTHER SIMILAR SUBMITTALS AS REQUIRED BY THE CONTRACT DOCUMENTS.

DOOR AND WINDOW ABBREVIATIONS

NOTE: NOT ALL ABBREVIATIONS MAY BE USED

FGL	FIBERGLASS
HC	HOLLOW CORE
HM	HOLLOW METAL
PR	PAIR
SC	SOLID CORE
SG	SAFETY GLAZING
WD	WOOD
X	EXTERIOR

REGISTERED ARCHITECT
BRIAN D. CARLETON
PORTLAND, OREGON
2918
STATE OF OREGON

CARLETON HART ARCHITECTURE
322 nw 8th avenue portland, oregon 97209
t 503 243 2252 | f 503 243 3261 | carletonhart.com

PARKWAY VILLAGE : EAST
APARTMENT REHABILITATION
SALEM HOUSING AUTHORITY

PERMIT REVIEW / BID SET

WINDOW & DOOR SCHEDULES

PROJ NO. 21348

01.21.14

COPYRIGHT - CARLETON HART ARCHITECTURE DO NOT REPRODUCE WITHOUT PERMISSION

A5.61

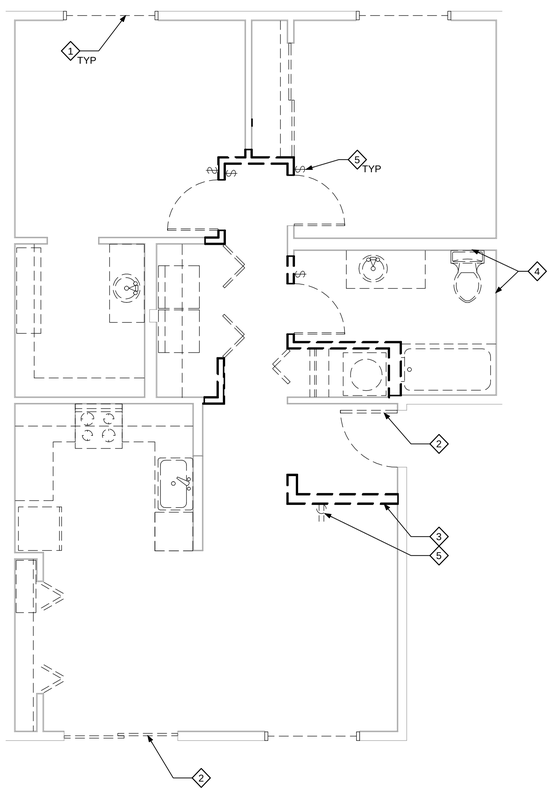

1 EXISTING 2 BEDROOM UNIT PLAN - DEMOLITION

SCALE: 1/4" = 1'-0"

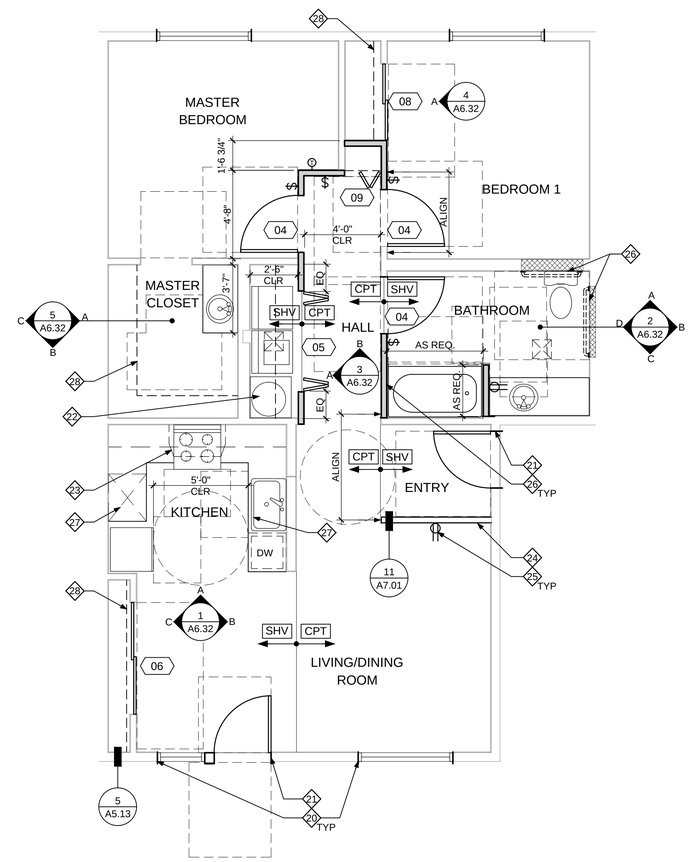

2 ACCESSIBLE 2 BEDROOM UNIT PLAN

SCALE: 1/4" = 1'-0"

DEMOLITION UNIT PLAN KEY NOTES

1. REMOVE (E) EXTERIOR WINDOWS & INTERIOR WOOD SILL. CUT & REMOVE (E) INTERIOR GYP BOARD AS NECESSARY TO ALLOW COMPLETE INSTALLATION OF WRB & ASSOCIATED FLASHINGS, TYP.
2. REMOVE (E) EXTERIOR DOORS & INTERIOR WOOD TRIM. CUT & REMOVE (E) INTERIOR GYP BOARD AS NECESSARY TO ALLOW COMPLETE INSTALLATION OF WRB & ASSOCIATED FLASHINGS, TYP.
3. REMOVE (E) INTERIOR PARTITION IN ITS ENTIRETY, TYP.
4. REMOVE (E) GYP BOARD TO ALLOW WORK TO INTERIOR OF WALL.
5. REMOVE (E) ELECTRICAL CONTROL DEVICE (SWITCH, OUTLET OR THERMOSTAT) & REINSTALL AT ACCEPTABLE HEIGHT IN SAME GENERAL AREA, TYP.

NEW UNIT PLAN KEY NOTES

20. PATCH GYP BOARD AT NEW EXTERIOR WINDOWS & INSTALL NEW PAINT GRADE WOOD SILL, TYP.
21. PATCH GYP BOARD AT NEW EXTERIOR DOORS, TYP.
22. RELOCATED WATER HEATER WITH NEW WATER SUPPLY, POWER & METAL DRIP PAN. ROUTE PRESSURE RELIEF TO EXTERIOR OF BUILDING ENCLOSURE.
23. NEW RANGE HOOD, PROVIDE CONNECTION TO (E) METAL DUCT. SEAL ALL DUCT CONNECTIONS & INSULATE DUCT UP TO BUILDING ENCLOSURE. PROVIDE SWITCH AT COUNTER HEIGHT.
24. NEW INTERIOR HALF-WALL PARTITION
25. NEW / REINSTALLED ELECTRICAL CONTROL DEVICE, TYP.
26. NEW GYP BOARD WALL PATCH, TYP.
27. PROVIDE 30" WIDE CLEAR FLOOR AREA UNDER SINK AND WORK AREA. CONTINUE FLOORING BELOW EACH AREA
28. NEW SHELVING. REFER TO INTERIOR ELEVATIONS

UNIT PLAN LEGEND

- DASHED LINE INDICATES WALL/FLOOR TO BE DEMOLISHED
- DASHED LINE INDICATES ITEM TO BE REMOVED
- EXISTING ITEM TO REMAIN
- NEW SHELVING
- EXISTING WALL TO REMAIN
- NEW WALL - PARTIAL HEIGHT. NEW HEIGHT TO MATCH EXISTING
- NEW WALL - FULL HEIGHT
- NEW BLOCKING FOR GRAB BAR SUPPORT
- 30" CLEAR WORK SURFACE AT ACCESSIBLE KITCHENS
- NEW GRAB BAR INSTALLATION AT ACCESSIBLE UNITS
- NEW VENTILATION FAN
- NEW THERMOSTAT
- NEW POWER OUTLET
- NEW LIGHT SWITCH

NEW DOOR LOCATION, TYPICAL

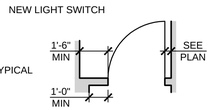

GENERAL UNIT PLAN NOTES

A. DESCRIPTION OF DEMOLITION WORK IS NOT INTENDED TO BE ALL INCLUSIVE. FIELD VERIFICATION OF AREAS, MATERIALS AND SYSTEMS SCHEDULED FOR DEMOLITION AND NEW WORK IS REQUIRED PRIOR TO COMMENCEMENT OF ANY WORK.

B. ANY OBSERVED, KNOWN OR VERIFIED CONDITION(S) THAT ARE MATERIAL TO THE PERFORMANCE OF THE WORK DESCRIBED BY THE CONTRACT DOCUMENTS OR OTHERWISE REQUIRE INTERPRETATION SHALL BE PROMPTLY REPORTED TO THE ARCHITECT IN WRITING AS A REQUEST FOR INTERPRETATION IN SUCH FORM AS THE ARCHITECT MAY REQUIRE.

C. PRESERVE AND PROTECT (E) DATA, TELEPHONE, ELECTRICAL DEVICES (SWITCHES, OUTLETS, ETC.) AND ASSOCIATED CONDUIT AND CONDUCTORS FROM DEVICE LOCATION TO PANEL OR EQUIPMENT. SYSTEMS ARE TO REMAIN IN PLACE U.O.N..

D. AT LOCATIONS OF REMOVED OR DEMOLISHED ITEMS AND BUILDING COMPONENTS AND SYSTEMS WHERE ADJACENT SURFACES ARE TO REMAIN, PATCH AND REPAIR AFFECTED SURFACES. PROVIDE FINISH MATERIALS, COLORS AND TEXTURES TO MATCH SURROUNDING SURFACES OR AS INDICATED ON THE FINISH SCHEDULE. PATCHING AND REPAIR TO BE APPLIED FROM CORNER TO CORNER (SIDE/SIDE; TOP/BOTTOM).

E. REFER TO INTERIOR ELEVATIONS FOR ADDITIONAL INFORMATION AND COORDINATION REGARDING NEW AND REINSTALLED SYSTEMS, DEVICES AND ACCESSORIES MOUNTING HEIGHTS AND APPROXIMATE LOCATIONS.

F. REFER TO FLOOR PLANS & EXTERIOR ELEVATIONS FOR ALL EXTERIOR SCOPE OF WORK.

G. DIMENSIONS ARE TO FACE OF STUD U.O.N..

H. FOR WORK AT (E) WALLS, REMOVE (E) GYP BOARD TO EXPOSE FRAMING & INTERIOR WALL COMPONENTS. REMOVE ENOUGH MATERIAL FROM FRAMING MEMBER TO FRAMING MEMBER TO ALLOW CLEARANCE TO PERFORM THE WORK, TYP.

I. AT ALL ACCESSIBLE UNITS, ITEMS TO BE REMOVED & STORED IN A PROTECTED LOCATION FOR RE-INSTALLATION INCLUDE & ARE NOT LIMITED TO THE FOLLOWING:
- WATER HEATER - PROVIDE NEW SUPPLY, POWER & DRIP PAN

J. AT ALL ACCESSIBLE UNITS, ITEMS TO BE REMOVED & REPLACED WITH NEW INCLUDE & ARE NOT LIMITED TO THE FOLLOWING:
- INTERIOR DOORS, FRAMES & HARDWARE
- SHELVING, CLOSET RODS & HARDWARE/LEDGERS
- COUNTERTOPS, UPPER & LOWER CABINETS
- ALL FLOOR FINISHES AND BASES
- ALL BATHROOM ACCESSORIES
- ALL WINDOW COVERINGS & HARDWARE
- SINKS, FAUCETS & EXPOSED CONNECTIONS
- LAVATORIES, FAUCETS & EXPOSED CONNECTIONS
- TOILETS & SUPPLY LINES
- BATHTUBS, SURROUNDS, CONTROLS & SHOWERHEADS
- REFRIGERATORS
- RANGES
- RANGE HOODS, PROTECT SOFFITS & DUCTING
- DISHWASHERS & SUPPLY/WASTE LINES
- GARBAGE DISPOSALS AT SINKS
- WASHERS & DRYERS
- VENTILATION FANS IN BATHROOMS & LAUNDRY AREAS

K. AT ACCESSIBLE UNITS, ELECTRICAL CONTROL DEVICES SUCH AS SWITCHES, OUTLETS, PANELS & THERMOSTATS THAT DO NOT COMPLY WITH REQUIRED REACH RANGES OF 15" MIN AFF & 48" MAX AFF MUST BE RELOCATED TO COMPLY.

L. PROVIDE BLOCKING AT ALL GRAB BAR LOCATIONS AT ALL UNITS.

M. ALL BATHROOM BASE CABINETRY IN ADAPTABLE UNITS TO BE 34" HIGH WITH A REMOVABLE BASE. SEE INTERIOR ELEVATIONS FOR ACCESSIBLE UNITS.

N. ALL KITCHEN CABINETRY IN ADAPTABLE UNITS TO BE 36" HIGH WITH A REMOVABLE BASE. SEE INTERIOR ELEVATIONS FOR ACCESSIBLE UNITS.

O. SIGHT & HEARING IMPAIRED UNITS SHALL HAVE VISIBLE NOTIFICATION APPLIANCES TIED TO THE SMOKE DETECTION/ALARM SYSTEM & A HARD-WIRED ELECTRIC DOORBELL.

REGISTERED ARCHITECT
BRIAN D. CARLETON
PORTLAND, OREGON
2918
STATE OF OREGON

CARLETON HART ARCHITECTURE
322 nw 8th avenue portland, oregon 97209
t 503 243 2252 | f 503 243 3261 | carletonhart.com

PARKWAY VILLAGE : EAST
APARTMENT REHABILITATION
SALEM HOUSING AUTHORITY

PERMIT REVIEW / BID SET

ENLARGED UNIT PLANS
2 BEDROOM
ACCESSIBLE

PROJ NO.
21348

01.21.14

A6.01

COPYRIGHT - CARLETON HART ARCHITECTURE DO NOT REPRODUCE WITHOUT PERMISSION

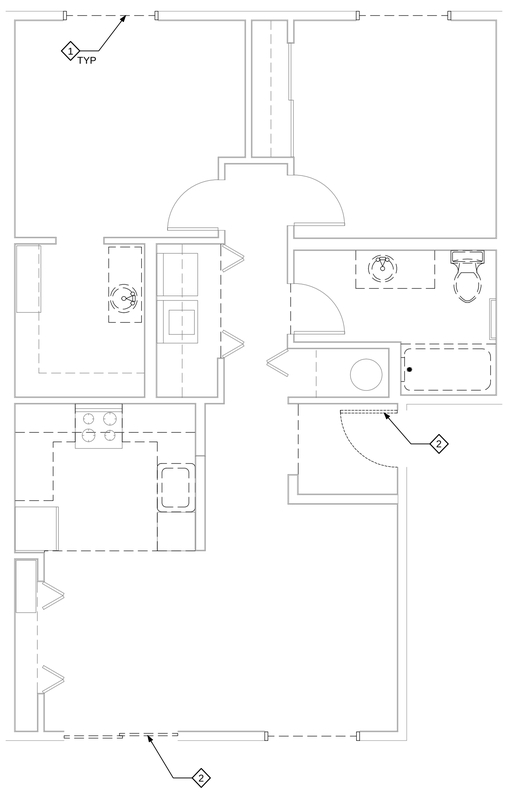

1 TYPICAL EXISTING 2 BEDROOM UNIT PLAN - DEMOLITION
SCALE: 1/4" = 1'-0"

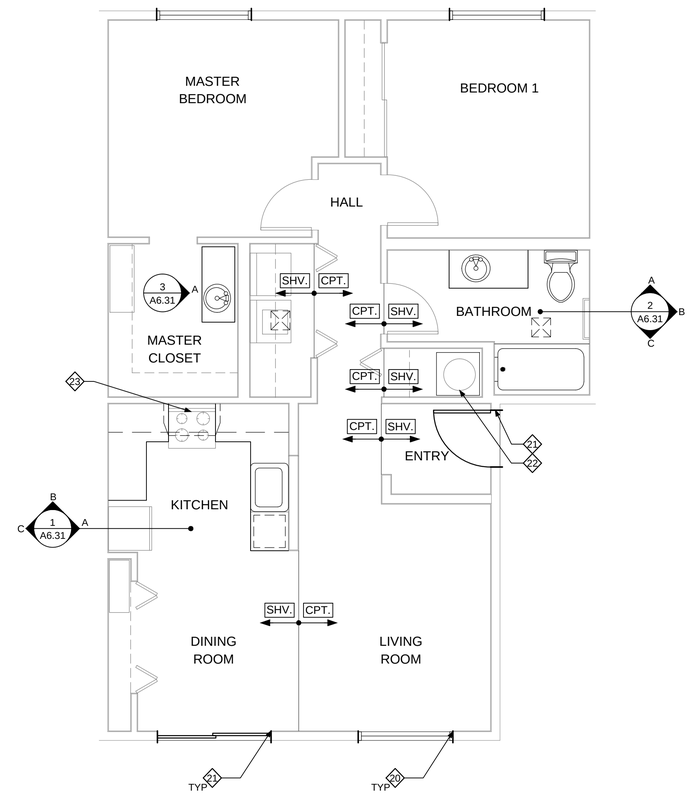

2 TYPICAL NEW 2 BEDROOM UNIT PLAN
SCALE: 1/4" = 1'-0"

DEMOLITION UNIT PLAN KEY NOTES

1. REMOVE (E) EXTERIOR WINDOWS & INTERIOR WOOD SILL. CUT & REMOVE (E) INTERIOR GYP BOARD AS NECESSARY TO ALLOW COMPLETE INSTALLATION OF WRB & ASSOCIATED FLASHINGS, TYP.
2. REMOVE (E) EXTERIOR DOORS & INTERIOR WOOD TRIM. CUT & REMOVE (E) INTERIOR GYP BOARD AS NECESSARY TO ALLOW COMPLETE INSTALLATION OF WRB & ASSOCIATED FLASHING, TYP.

NEW UNIT PLAN KEY NOTES

20. PATCH GYP BOARD AT NEW EXTERIOR WINDOWS & INSTALL NEW PAINT GRADE WOOD SILL, TYP.
21. PATCH GYP BOARD AT NEW EXTERIOR DOORS, TYP.
22. EXISTING WATER HEATER TO BE REINSTALLED. PROVIDE NEW SUPPLY, POWER & METAL DRIP PAN. ROUTE PRESSURE RELIEF TO EXTERIOR OF BUILDING ENCLOSURE.
23. NEW RANGE HOOD, PROVIDE CONNECTION TO (E) METAL DUCT. SEAL ALL DUCT CONNECTIONS & INSULATE DUCT UP TO BUILDING ENCLOSURE

UNIT PLAN LEGEND

- DASHED LINE INDICATES ITEM TO BE REMOVED
- EXISTING ITEM TO REMAIN
- EXISTING WALL TO REMAIN
- NEW VENTILATION FAN

GENERAL UNIT PLAN NOTES

A. DESCRIPTION OF DEMOLITION WORK IS NOT INTENDED TO BE ALL INCLUSIVE. FIELD VERIFICATION OF AREAS, MATERIALS AND SYSTEMS SCHEDULED FOR DEMOLITION AND NEW WORK IS REQUIRED PRIOR TO COMMENCEMENT OF ANY WORK.

B. ANY OBSERVED, KNOWN OR VERIFIED CONDITION(S) THAT ARE MATERIAL TO THE PERFORMANCE OF THE WORK DESCRIBED BY THE CONTRACT DOCUMENTS OR OTHERWISE REQUIRE INTERPRETATION SHALL BE PROMPTLY REPORTED TO THE ARCHITECT IN WRITING AS A REQUEST FOR INTERPRETATION IN SUCH FORM AS THE ARCHITECT MAY REQUIRE.

C. PRESERVE AND PROTECT (E) DATA, TELEPHONE, ELECTRICAL DEVICES (SWITCHES, OUTLETS, ETC.) AND ASSOCIATED CONDUIT AND CONDUCTORS FROM DEVICE LOCATION TO PANEL OR EQUIPMENT. SYSTEMS ARE TO REMAIN IN PLACE U.O.N..

D. AT LOCATIONS OF REMOVED OR DEMOLISHED ITEMS AND BUILDING COMPONENTS AND SYSTEMS WHERE ADJACENT SURFACES ARE TO REMAIN, PATCH AND REPAIR AFFECTED SURFACES. PROVIDE FINISH MATERIALS, COLORS AND TEXTURES TO MATCH SURROUNDING SURFACES OR AS INDICATED ON THE FINISH SCHEDULE. PATCHING AND REPAIR TO BE APPLIED FROM CORNER TO CORNER (SIDE/SIDE; TOP/BOTTOM).

E. REFER TO INTERIOR ELEVATIONS FOR ADDITIONAL INFORMATION AND COORDINATION REGARDING NEW AND REINSTALLED SYSTEMS, DEVICES AND ACCESSORIES MOUNTING HEIGHTS AND APPROXIMATE LOCATIONS.

F. REFER TO FLOOR PLANS & EXTERIOR ELEVATIONS FOR ALL EXTERIOR SCOPE OF WORK.

G. DIMENSIONS ARE TO FACE OF STUD U.O.N..

H. FOR WORK AT (E) WALLS, REMOVE (E) GYP BOARD TO EXPOSE FRAMING & INTERIOR WALL COMPONENTS. REMOVE ENOUGH MATERIAL FROM FRAMING MEMBER TO FRAMING MEMBER TO ALLOW CLEARANCE TO PERFORM THE WORK, TYP.

I. AT ALL 1ST FLOOR NON-ACESSIBLE UNITS, ITEMS TO BE REMOVED & STORED IN A PROTECTED LOCATION FOR RE-INSTALLATION INCLUDE & ARE NOT LIMITED TO THE FOLLOWING:
- WATER HEATER - PROVIDE NEW SUPPLY, POWER & DRIP PAN
- WASHER & DRYER - EXCEPT AT ACCESSIBLE UNITS
- REFRIGERATOR, RANGE & DISHWASHER - EXCEPT AT ACCESSIBLE UNITS

J. AT ALL 1ST FLOOR NON-ACCESSIBLE UNITS, ITEMS TO BE REMOVED & REPLACED WITH NEW INCLUDE & ARE NOT LIMITED TO THE FOLLOWING:
- COUNTERTOPS, UPPER & LOWER CABINETS
- ALL FLOOR FINISHES AND BASES
- SINKS, FAUCETS & EXPOSED CONNECTIONS
- LAVATORIES, FAUCETS & EXPOSED CONNECTIONS
- TOILETS & SUPPLY LINES
- BATHTUBS, SURROUNDS, CONTROLS & SHOWERHEADS
- RANGE HOODS, PROTECT SOFFITS & DUCTING
- GARBAGE DISPOSALS AT SINKS
- VENTILATION FANS IN BATHROOMS & LAUNDRY AREAS

K. SIGHT & HEARING IMPAIRED UNITS SHALL HAVE VISIBLE NOTIFICATION APPLIANCES TIED TO THE SMOKE DETECTION/ALARM SYSTEM & A HARD-WIRED ELECTRIC DOORBELL.

REGISTERED ARCHITECT
BRIAN D. CARLETON
PORTLAND, OREGON
2918
STATE OF OREGON

CARLETON HART ARCHITECTURE
322 nw 8th avenue portland, oregon 97209
t 503 243 2252 | f 503 243 3261 | carletonhart.com

PARKWAY VILLAGE : EAST
APARTMENT REHABILITATION
SALEM HOUSING AUTHORITY

PERMIT REVIEW / BID SET

ENLARGED UNIT PLANS
2 BEDROOM
1ST FLOOR

PROJ NO.
21348

01.21.14

COPYRIGHT - CARLETON HART ARCHITECTURE DO NOT REPRODUCE WITHOUT PERMISSION

A6.02

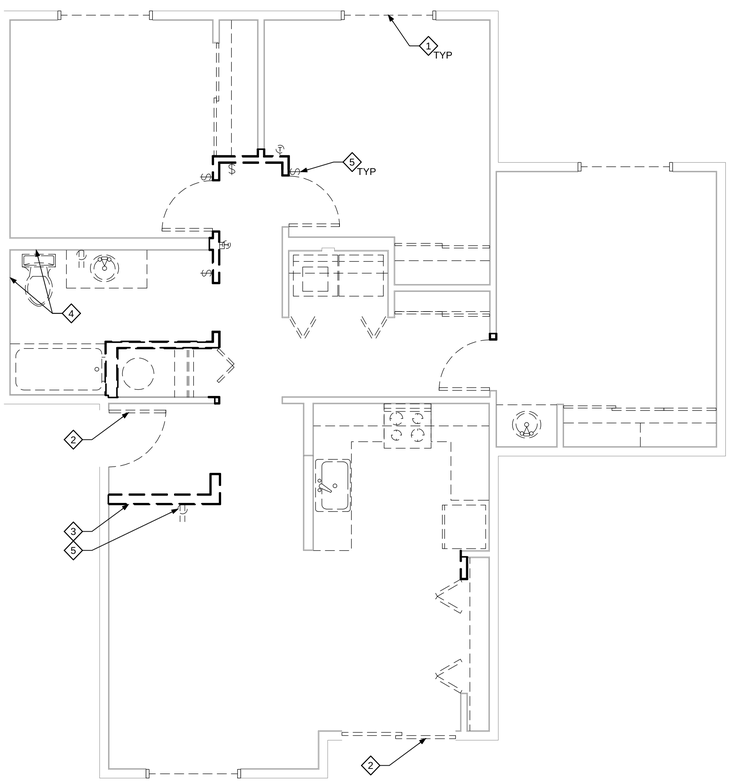

1 EXISTING 3 BED 1 BATH UNIT PLAN - DEMOLITION
SCALE: 1/4" = 1'-0"

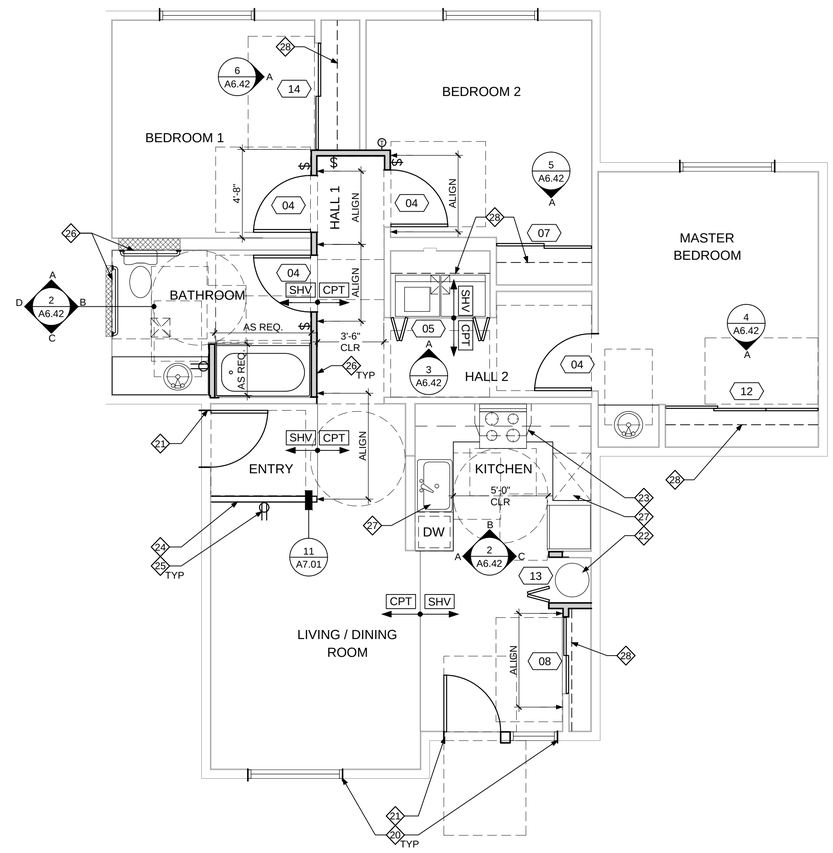

2 ACCESSIBLE 3 BED 1 BATH UNIT PLAN
SCALE: 1/4" = 1'-0"

DEMOLITION UNIT PLAN KEY NOTES

1. REMOVE (E) EXTERIOR WINDOWS & INTERIOR WOOD SILL. CUT & REMOVE (E) INTERIOR GYP BOARD AS NECESSARY TO ALLOW COMPLETE INSTALLATION OF WRB & ASSOCIATED FLASHINGS, TYP.
2. REMOVE (E) EXTERIOR DOORS & INTERIOR WOOD TRIM. CUT & REMOVE (E) INTERIOR GYP BOARD AS NECESSARY TO ALLOW COMPLETE INSTALLATION OF WRB & ASSOCIATED FLASHINGS, TYP.
3. REMOVE (E) INTERIOR PARTITION IN ITS ENTIRETY, TYP.
4. REMOVE (E) GYP BOARD TO ALLOW WORK TO INTERIOR OF WALL.
5. REMOVE (E) ELECTRICAL CONTROL DEVICE (SWITCH, OUTLET OR THERMOSTAT) & REINSTALL AT ACCEPTABLE HEIGHT IN SAME GENERAL AREA, TYP.

NEW UNIT PLAN KEY NOTES

20. PATCH GYP BOARD AT NEW EXTERIOR WINDOWS & INSTALL NEW PAINT GRADE WOOD SILL, TYP.
21. PATCH GYP BOARD AT NEW EXTERIOR DOORS, TYP.
22. RELOCATED WATER HEATER WITH NEW WATER SUPPLY, POWER & METAL DRIP PAN. ROUTE PRESSURE RELIEF TO EXTERIOR OF BUILDING ENCLOSURE.
23. NEW RANGE HOOD, PROVIDE CONNECTION TO (E) METAL DUCT. SEAL ALL DUCT CONNECTIONS & INSULATE DUCT UP TO BUILDING ENCLOSURE. PROVIDE SWITCH AT COUNTER HEIGHT.
24. NEW INTERIOR HALF-WALL PARTITION
25. NEW / REINSTALLED ELECTRICAL CONTROL DEVICE, TYP.
26. NEW GYP BOARD WALL PATCH, TYP.
27. PROVIDE 30" WIDE CLEAR FLOOR AREA UNDER SINK AND WORK AREA. CONTINUE FLOORING BELOW EACH AREA
28. NEW SHELVING. REFER TO INTERIOR ELEVATIONS

UNIT PLAN LEGEND

- DASHED LINE INDICATES WALL/FLOOR TO BE DEMOLISHED
- DASHED LINE INDICATES ITEM TO BE REMOVED
- EXISTING ITEM TO REMAIN
- NEW SHELVING
- EXISTING WALL TO REMAIN
- NEW WALL - PARTIAL HEIGHT. NEW HEIGHT TO MATCH EXISTING
- NEW WALL - FULL HEIGHT
- NEW BLOCKING FOR GRAB BAR SUPPORT
- 30" CLEAR WORK SURFACE AT ACCESSIBLE KITCHENS
- NEW GRAB BAR INSTALLATION AT ACCESSIBLE UNITS
- NEW VENTILATION FAN
- NEW THERMOSTAT
- NEW POWER OUTLET
- NEW LIGHT SWITCH

NEW DOOR LOCATION, TYPICAL

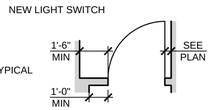

GENERAL UNIT PLAN NOTES

A. DESCRIPTION OF DEMOLITION WORK IS NOT INTENDED TO BE ALL INCLUSIVE. FIELD VERIFICATION OF AREAS, MATERIALS AND SYSTEMS SCHEDULED FOR DEMOLITION AND NEW WORK IS REQUIRED PRIOR TO COMMENCEMENT OF ANY WORK.

B. ANY OBSERVED, KNOWN OR VERIFIED CONDITION(S) THAT ARE MATERIAL TO THE PERFORMANCE OF THE WORK DESCRIBED BY THE CONTRACT DOCUMENTS OR OTHERWISE REQUIRE INTERPRETATION SHALL BE PROMPTLY REPORTED TO THE ARCHITECT IN WRITING AS A REQUEST FOR INTERPRETATION IN SUCH FORM AS THE ARCHITECT MAY REQUIRE.

C. PRESERVE AND PROTECT (E) DATA, TELEPHONE, ELECTRICAL DEVICES (SWITCHES, OUTLETS, ETC.) AND ASSOCIATED CONDUIT AND CONDUCTORS FROM DEVICE LOCATION TO PANEL OR EQUIPMENT. SYSTEMS ARE TO REMAIN IN PLACE U.O.N..

D. AT LOCATIONS OF REMOVED OR DEMOLISHED ITEMS AND BUILDING COMPONENTS AND SYSTEMS WHERE ADJACENT SURFACES ARE TO REMAIN, PATCH AND REPAIR AFFECTED SURFACES. PROVIDE FINISH MATERIALS, COLORS AND TEXTURES TO MATCH SURROUNDING SURFACES OR AS INDICATED ON THE FINISH SCHEDULE. PATCHING AND REPAIR TO BE APPLIED FROM CORNER TO CORNER (SIDE/SIDE; TOP/BOTTOM).

E. REFER TO INTERIOR ELEVATIONS FOR ADDITIONAL INFORMATION AND COORDINATION REGARDING NEW AND REINSTALLED SYSTEMS, DEVICES AND ACCESSORIES MOUNTING HEIGHTS AND APPROXIMATE LOCATIONS.

F. REFER TO FLOOR PLANS & EXTERIOR ELEVATIONS FOR ALL EXTERIOR SCOPE OF WORK.

G. DIMENSIONS ARE TO FACE OF STUD U.O.N..

H. FOR WORK AT (E) WALLS, REMOVE (E) GYP BOARD TO EXPOSE FRAMING & INTERIOR WALL COMPONENTS. REMOVE ENOUGH MATERIAL FROM FRAMING MEMBER TO FRAMING MEMBER TO ALLOW CLEARANCE TO PERFORM THE WORK, TYP.

I. AT ALL ACCESSIBLE UNITS, ITEMS TO BE REMOVED & STORED IN A PROTECTED LOCATION FOR RE-INSTALLATION INCLUDE & ARE NOT LIMITED TO THE FOLLOWING:
- WATER HEATER - PROVIDE NEW SUPPLY, POWER & DRIP PAN

J. AT ALL ACCESSIBLE UNITS, ITEMS TO BE REMOVED & REPLACED WITH NEW INCLUDE & ARE NOT LIMITED TO THE FOLLOWING:
- INTERIOR DOORS, FRAMES & HARDWARE
- SHELVING, CLOSET RODS & HARDWARE/LEDGERS
- COUNTERTOPS, UPPER & LOWER CABINETS
- ALL FLOOR FINISHES AND BASES
- ALL BATHROOM ACCESSORIES
- ALL WINDOW COVERINGS & HARDWARE
- SINKS, FAUCETS & EXPOSED CONNECTIONS
- LAVATORIES, FAUCETS & EXPOSED CONNECTIONS
- TOILETS & SUPPLY LINES
- BATHTUBS, SURROUNDS, CONTROLS & SHOWERHEADS
- REFRIGERATORS
- RANGES
- RANGE HOODS, PROTECT SOFFITS & DUCTING
- DISHWASHERS & SUPPLY/WASTE LINES
- GARBAGE DISPOSALS AT SINKS
- WASHERS & DRYERS
- VENTILATION FANS IN BATHROOMS & LAUNDRY AREAS

K. AT ACCESSIBLE UNITS, ELECTRICAL CONTROL DEVICES SUCH AS SWITCHES, OUTLETS, PANELS & THERMOSTATS THAT DO NOT COMPLY WITH REQUIRED REACH RANGES OF 15" MIN AFF & 48" MAX AFF MUST BE RELOCATED TO COMPLY.

L. PROVIDE BLOCKING AT ALL GRAB BAR LOCATIONS AT ALL UNITS.

M. ALL BATHROOM BASE CABINETRY IN ADAPTABLE UNITS TO BE 34" HIGH WITH A REMOVABLE BASE. SEE INTERIOR ELEVATIONS FOR ACCESSIBLE UNITS.

N. ALL KITCHEN CABINETRY IN ADAPTABLE UNITS TO BE 36" HIGH WITH A REMOVABLE BASE. SEE INTERIOR ELEVATIONS FOR ACCESSIBLE UNITS.

O. SIGHT & HEARING IMPAIRED UNITS SHALL HAVE VISIBLE NOTIFICATION APPLIANCES TIED TO THE SMOKE DETECTION/ALARM SYSTEM & A HARD-WIRED ELECTRIC DOORBELL.

REGISTERED ARCHITECT
BRIAN D. CARLETON
PORTLAND, OREGON
2918
STATE OF OREGON

CARLETON HART ARCHITECTURE
322 nw 8th avenue portland, oregon 97209
t 503 243 2252 | f 503 243 3261 | carletonhart.com

PARKWAY VILLAGE : EAST
APARTMENT REHABILITATION
SALEM HOUSING AUTHORITY

PERMIT REVIEW / BID SET

ENLARGED UNIT PLANS
3 BEDROOM 1 BATH
ACCESSIBLE

PROJ NO.
21348

01.21.14

A6.11

COPYRIGHT - CARLETON HART ARCHITECTURE DO NOT REPRODUCE WITHOUT PERMISSION

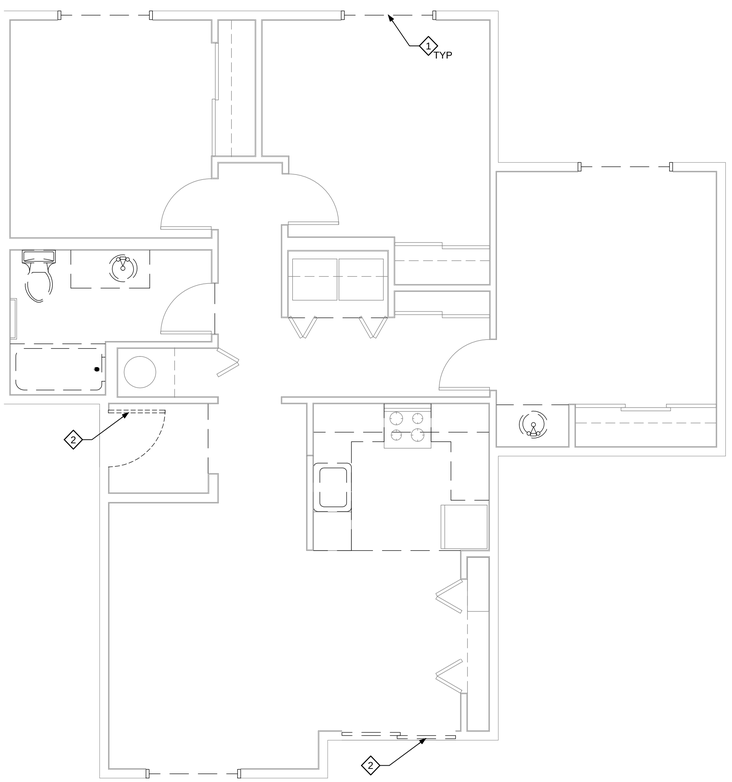

1 TYPICAL EXISTING 3 BED 1 BATH UNIT PLAN - DEMO
SCALE: 1/4" = 1'-0"

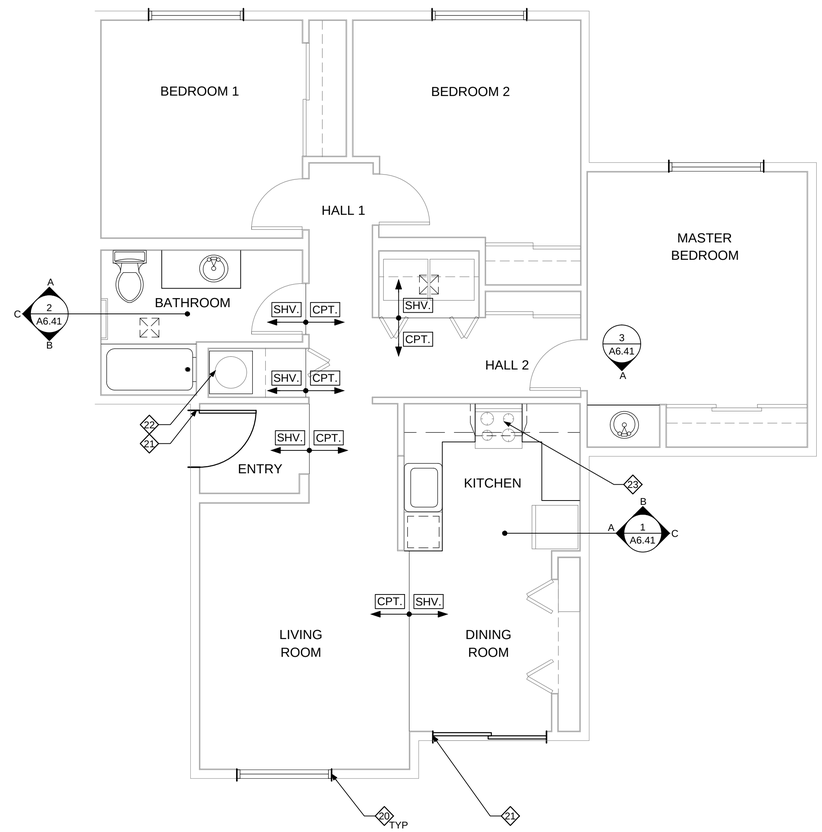

2 TYPICAL NEW 3 BED 1 BATH UNIT PLAN
SCALE: 1/4" = 1'-0"

DEMOLITION UNIT PLAN KEY NOTES

1. REMOVE (E) EXTERIOR WINDOWS & INTERIOR WOOD SILL. CUT & REMOVE (E) INTERIOR GYP BOARD AS NECESSARY TO ALLOW COMPLETE INSTALLATION OF WRB & ASSOCIATED FLASHINGS, TYP.
2. REMOVE (E) EXTERIOR DOORS & INTERIOR WOOD TRIM. CUT & REMOVE (E) INTERIOR GYP BOARD AS NECESSARY TO ALLOW COMPLETE INSTALLATION OF WRB & ASSOCIATED FLASHING, TYP.

NEW UNIT PLAN KEY NOTES

20. PATCH GYP BOARD AT NEW EXTERIOR WINDOWS & INSTALL NEW PAINT GRADE WOOD SILL, TYP.
21. PATCH GYP BOARD AT NEW EXTERIOR DOORS, TYP.
22. EXISTING WATER HEATER TO BE REINSTALLED. PROVIDE NEW SUPPLY, POWER & METAL DRIP PAN. ROUTE PRESSURE RELIEF TO EXTERIOR OF BUILDING ENCLOSURE.
23. NEW RANGE HOOD, PROVIDE CONNECTION TO (E) METAL DUCT. SEAL ALL DUCT CONNECTIONS & INSULATE DUCT UP TO BUILDING ENCLOSURE

UNIT PLAN LEGEND

- DASHED LINE INDICATES ITEM TO BE REMOVED
- EXISTING ITEM TO REMAIN
- EXISTING WALL TO REMAIN
- NEW VENTILATION FAN

GENERAL UNIT PLAN NOTES

A. DESCRIPTION OF DEMOLITION WORK IS NOT INTENDED TO BE ALL INCLUSIVE. FIELD VERIFICATION OF AREAS, MATERIALS AND SYSTEMS SCHEDULED FOR DEMOLITION AND NEW WORK IS REQUIRED PRIOR TO COMMENCEMENT OF ANY WORK.

B. ANY OBSERVED, KNOWN OR VERIFIED CONDITION(S) THAT ARE MATERIAL TO THE PERFORMANCE OF THE WORK DESCRIBED BY THE CONTRACT DOCUMENTS OR OTHERWISE REQUIRE INTERPRETATION SHALL BE PROMPTLY REPORTED TO THE ARCHITECT IN WRITING AS A REQUEST FOR INTERPRETATION IN SUCH FORM AS THE ARCHITECT MAY REQUIRE.

C. PRESERVE AND PROTECT (E) DATA, TELEPHONE, ELECTRICAL DEVICES (SWITCHES, OUTLETS, ETC.) AND ASSOCIATED CONDUIT AND CONDUCTORS FROM DEVICE LOCATION TO PANEL OR EQUIPMENT. SYSTEMS ARE TO REMAIN IN PLACE U.O.N..

D. AT LOCATIONS OF REMOVED OR DEMOLISHED ITEMS AND BUILDING COMPONENTS AND SYSTEMS WHERE ADJACENT SURFACES ARE TO REMAIN, PATCH AND REPAIR AFFECTED SURFACES. PROVIDE FINISH MATERIALS, COLORS AND TEXTURES TO MATCH SURROUNDING SURFACES OR AS INDICATED ON THE FINISH SCHEDULE. PATCHING AND REPAIR TO BE APPLIED FROM CORNER TO CORNER (SIDE/SIDE; TOP/BOTTOM).

E. REFER TO INTERIOR ELEVATIONS FOR ADDITIONAL INFORMATION AND COORDINATION REGARDING NEW AND REINSTALLED SYSTEMS, DEVICES AND ACCESSORIES MOUNTING HEIGHTS AND APPROXIMATE LOCATIONS.

F. REFER TO FLOOR PLANS & EXTERIOR ELEVATIONS FOR ALL EXTERIOR SCOPE OF WORK.

G. DIMENSIONS ARE TO FACE OF STUD U.O.N..

H. FOR WORK AT (E) WALLS, REMOVE (E) GYP BOARD TO EXPOSE FRAMING & INTERIOR WALL COMPONENTS. REMOVE ENOUGH MATERIAL FROM FRAMING MEMBER TO FRAMING MEMBER TO ALLOW CLEARANCE TO PERFORM THE WORK, TYP.

I. AT ALL 1ST FLOOR NON-ACESSIBLE UNITS, ITEMS TO BE REMOVED & STORED IN A PROTECTED LOCATION FOR RE-INSTALLATION INCLUDE & ARE NOT LIMITED TO THE FOLLOWING:
- WATER HEATER - PROVIDE NEW SUPPLY, POWER & DRIP PAN
- WASHER & DRYER - EXCEPT AT ACCESSIBLE UNITS
- REFRIGERATOR, RANGE & DISHWASHER - EXCEPT AT ACCESSIBLE UNITS

J. AT ALL 1ST FLOOR NON-ACCESSIBLE UNITS, ITEMS TO BE REMOVED & REPLACED WITH NEW INCLUDE & ARE NOT LIMITED TO THE FOLLOWING:
- COUNTERTOPS, UPPER & LOWER CABINETS
- ALL FLOOR FINISHES AND BASES
- SINKS, FAUCETS & EXPOSED CONNECTIONS
- LAVATORIES, FAUCETS & EXPOSED CONNECTIONS
- TOILETS & SUPPLY LINES
- BATHTUBS, SURROUNDS, CONTROLS & SHOWERHEADS
- RANGE HOODS, PROTECT SOFFITS & DUCTING
- GARBAGE DISPOSALS AT SINKS
- VENTILATION FANS IN BATHROOMS & LAUNDRY AREAS

K. SIGHT & HEARING IMPAIRED UNITS SHALL HAVE VISIBLE NOTIFICATION APPLIANCES TIED TO THE SMOKE DETECTION/ALARM SYSTEM & A HARD-WIRED ELECTRIC DOORBELL.

REGISTERED ARCHITECT
BRIAN D. CARLETON
PORTLAND, OREGON
2918
STATE OF OREGON

CARLETON HART ARCHITECTURE
322 nw 8th avenue portland, oregon 97209
t 503 243 2252 | f 503 243 3261 | carletonhart.com

PARKWAY VILLAGE : EAST
APARTMENT REHABILITATION
SALEM HOUSING AUTHORITY

PERMIT REVIEW / BID SET

ENLARGED UNIT PLANS
3 BEDROOM 1 BATH
1ST FLOOR

PROJ NO.
21348

01.21.14

A6.12

COPYRIGHT - CARLETON HART ARCHITECTURE DO NOT REPRODUCE WITHOUT PERMISSION

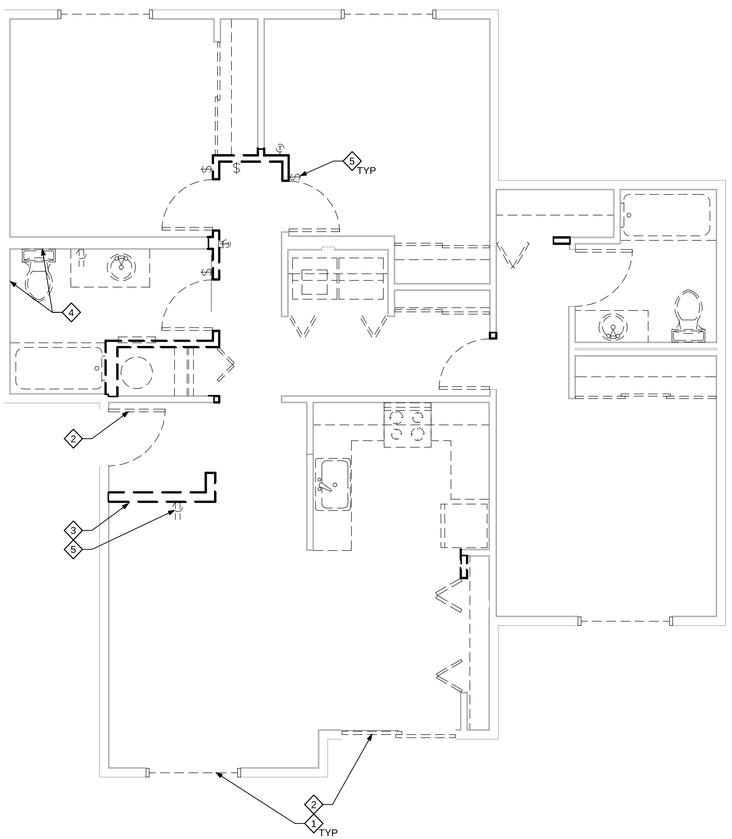

1 EXISTING 3 BED 2 BATH UNIT PLAN - DEMOLITION
SCALE: 1/4" = 1'-0"

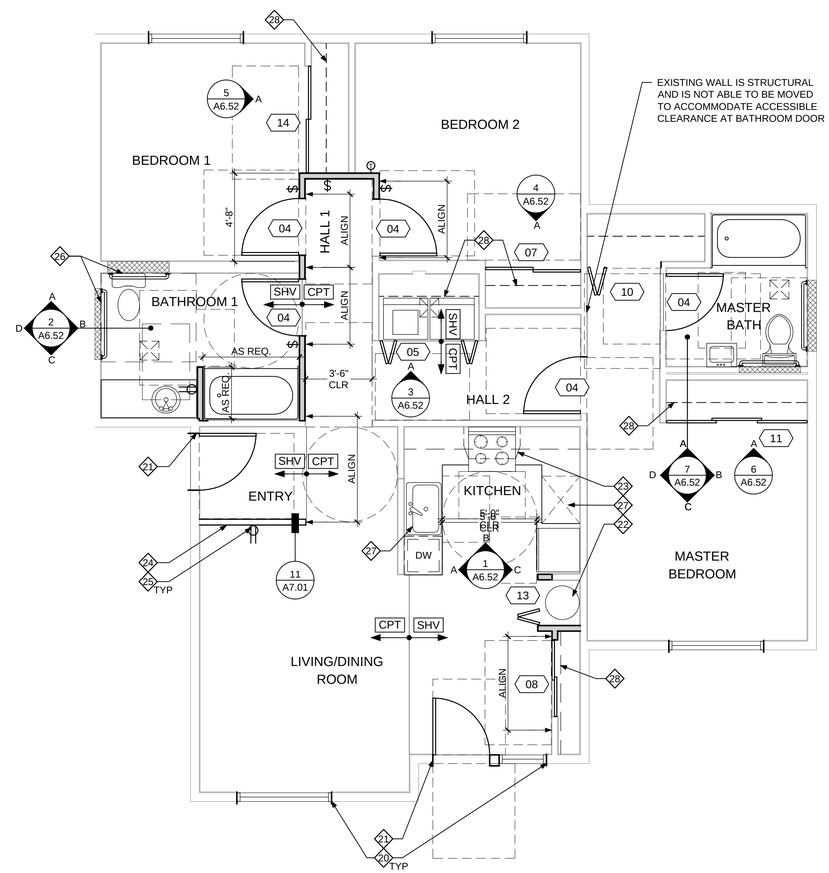

2 ACCESSIBLE 3 BED 2 BATH UNIT PLAN
SCALE: 1/4" = 1'-0"

DEMOLITION UNIT PLAN KEY NOTES

1. REMOVE (E) EXTERIOR WINDOWS & INTERIOR WOOD SILL. CUT & REMOVE (E) INTERIOR GYP BOARD AS NECESSARY TO ALLOW COMPLETE INSTALLATION OF WRB & ASSOCIATED FLASHINGS, TYP.
2. REMOVE (E) EXTERIOR DOORS & INTERIOR WOOD TRIM. CUT & REMOVE (E) INTERIOR GYP BOARD AS NECESSARY TO ALLOW COMPLETE INSTALLATION OF WRB & ASSOCIATED FLASHINGS, TYP.
3. REMOVE (E) INTERIOR PARTITION IN ITS ENTIRETY, TYP.
4. REMOVE (E) GYP BOARD TO ALLOW WORK TO INTERIOR OF WALL.
5. REMOVE (E) ELECTRICAL CONTROL DEVICE (SWITCH, OUTLET OR THERMOSTAT) & REINSTALL AT ACCEPTABLE HEIGHT IN SAME GENERAL AREA, TYP.

NEW UNIT PLAN KEY NOTES

20. PATCH GYP BOARD AT NEW EXTERIOR WINDOWS & INSTALL NEW PAINT GRADE WOOD SILL, TYP.
21. PATCH GYP BOARD AT NEW EXTERIOR DOORS, TYP.
22. RELOCATED WATER HEATER WITH NEW WATER SUPPLY, POWER & METAL DRIP PAN. ROUTE PRESSURE RELIEF TO EXTERIOR OF BUILDING ENCLOSURE.
23. NEW RANGE HOOD, PROVIDE CONNECTION TO (E) METAL DUCT. SEAL ALL DUCT CONNECTIONS & INSULATE DUCT UP TO BUILDING ENCLOSURE. PROVIDE SWITCH AT COUNTER HEIGHT.
24. NEW INTERIOR HALF-WALL PARTITION
25. NEW / REINSTALLED ELECTRICAL CONTROL DEVICE, TYP.
26. NEW GYP BOARD WALL PATCH, TYP.
27. PROVIDE 30" WIDE CLEAR FLOOR AREA UNDER SINK AND WORK AREA. CONTINUE FLOORING BELOW EACH AREA
28. NEW SHELVING. REFER TO INTERIOR ELEVATIONS

UNIT PLAN LEGEND

- DASHED LINE INDICATES WALL/FLOOR TO BE DEMOLISHED
- DASHED LINE INDICATES ITEM TO BE REMOVED
- EXISTING ITEM TO REMAIN
- NEW SHELVING
- EXISTING WALL TO REMAIN
- NEW WALL - PARTIAL HEIGHT. NEW HEIGHT TO MATCH EXISTING
- NEW WALL - FULL HEIGHT
- NEW BLOCKING FOR GRAB BAR SUPPORT
- 30" CLEAR WORK SURFACE AT ACCESSIBLE KITCHENS
- NEW GRAB BAR INSTALLATION AT ACCESSIBLE UNITS
- NEW VENTILATION FAN
- NEW THERMOSTAT
- NEW POWER OUTLET
- NEW LIGHT SWITCH

NEW DOOR LOCATION, TYPICAL

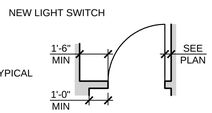

GENERAL UNIT PLAN NOTES

A. DESCRIPTION OF DEMOLITION WORK IS NOT INTENDED TO BE ALL INCLUSIVE. FIELD VERIFICATION OF AREAS, MATERIALS AND SYSTEMS SCHEDULED FOR DEMOLITION AND NEW WORK IS REQUIRED PRIOR TO COMMENCEMENT OF ANY WORK.

B. ANY OBSERVED, KNOWN OR VERIFIED CONDITION(S) THAT ARE MATERIAL TO THE PERFORMANCE OF THE WORK DESCRIBED BY THE CONTRACT DOCUMENTS OR OTHERWISE REQUIRE INTERPRETATION SHALL BE PROMPTLY REPORTED TO THE ARCHITECT IN WRITING AS A REQUEST FOR INTERPRETATION IN SUCH FORM AS THE ARCHITECT MAY REQUIRE.

C. PRESERVE AND PROTECT (E) DATA, TELEPHONE, ELECTRICAL DEVICES (SWITCHES, OUTLETS, ETC.) AND ASSOCIATED CONDUIT AND CONDUCTORS FROM DEVICE LOCATION TO PANEL OR EQUIPMENT. SYSTEMS ARE TO REMAIN IN PLACE U.O.N..

D. AT LOCATIONS OF REMOVED OR DEMOLISHED ITEMS AND BUILDING COMPONENTS AND SYSTEMS WHERE ADJACENT SURFACES ARE TO REMAIN, PATCH AND REPAIR AFFECTED SURFACES. PROVIDE FINISH MATERIALS, COLORS AND TEXTURES TO MATCH SURROUNDING SURFACES OR AS INDICATED ON THE FINISH SCHEDULE. PATCHING AND REPAIR TO BE APPLIED FROM CORNER TO CORNER (SIDE/SIDE; TOP/BOTTOM).

E. REFER TO INTERIOR ELEVATIONS FOR ADDITIONAL INFORMATION AND COORDINATION REGARDING NEW AND REINSTALLED SYSTEMS, DEVICES AND ACCESSORIES MOUNTING HEIGHTS AND APPROXIMATE LOCATIONS.

F. REFER TO FLOOR PLANS & EXTERIOR ELEVATIONS FOR ALL EXTERIOR SCOPE OF WORK.

G. DIMENSIONS ARE TO FACE OF STUD U.O.N..

H. FOR WORK AT (E) WALLS, REMOVE (E) GYP BOARD TO EXPOSE FRAMING & INTERIOR WALL COMPONENTS. REMOVE ENOUGH MATERIAL FROM FRAMING MEMBER TO FRAMING MEMBER TO ALLOW CLEARANCE TO PERFORM THE WORK, TYP.

I. AT ALL ACCESSIBLE UNITS, ITEMS TO BE REMOVED & STORED IN A PROTECTED LOCATION FOR RE-INSTALLATION INCLUDE & ARE NOT LIMITED TO THE FOLLOWING:
- WATER HEATER - PROVIDE NEW SUPPLY, POWER & DRIP PAN

J. AT ALL ACCESSIBLE UNITS, ITEMS TO BE REMOVED & REPLACED WITH NEW INCLUDE & ARE NOT LIMITED TO THE FOLLOWING:
- INTERIOR DOORS, FRAMES & HARDWARE
- SHELVING, CLOSET RODS & HARDWARE/LEDGERS
- COUNTERTOPS, UPPER & LOWER CABINETS
- ALL FLOOR FINISHES AND BASES
- ALL BATHROOM ACCESSORIES
- ALL WINDOW COVERINGS & HARDWARE
- SINKS, FAUCETS & EXPOSED CONNECTIONS
- LAVATORIES, FAUCETS & EXPOSED CONNECTIONS
- TOILETS & SUPPLY LINES
- BATHTUBS, SURROUNDS, CONTROLS & SHOWERHEADS
- REFRIGERATORS
- RANGES
- RANGE HOODS, PROTECT SOFFITS & DUCTING
- DISHWASHERS & SUPPLY/WASTE LINES
- GARBAGE DISPOSALS AT SINKS
- WASHERS & DRYERS
- VENTILATION FANS IN BATHROOMS & LAUNDRY AREAS

K. AT ACCESSIBLE UNITS, ELECTRICAL CONTROL DEVICES SUCH AS SWITCHES, OUTLETS, PANELS & THERMOSTATS THAT DO NOT COMPLY WITH REQUIRED REACH RANGES OF 15" MIN AFF & 48" MAX AFF MUST BE RELOCATED TO COMPLY.

L. PROVIDE BLOCKING AT ALL GRAB BAR LOCATIONS AT ALL UNITS.

M. ALL BATHROOM BASE CABINETRY IN ADAPTABLE UNITS TO BE 34" HIGH WITH A REMOVABLE BASE. SEE INTERIOR ELEVATIONS FOR ACCESSIBLE UNITS.

N. ALL KITCHEN CABINETRY IN ADAPTABLE UNITS TO BE 36" HIGH WITH A REMOVABLE BASE. SEE INTERIOR ELEVATIONS FOR ACCESSIBLE UNITS.

O. SIGHT & HEARING IMPAIRED UNITS SHALL HAVE VISIBLE NOTIFICATION APPLIANCES TIED TO THE SMOKE DETECTION/ALARM SYSTEM & A HARD-WIRED ELECTRIC DOORBELL.

REGISTERED ARCHITECT
BRIAN D. CARLETON
PORTLAND, OREGON
2918
STATE OF OREGON

CARLETON HART ARCHITECTURE
322 nw 8th avenue portland, oregon 97209
t 503 243 2252 | f 503 243 3261 | carletonhart.com

PARKWAY VILLAGE : EAST
APARTMENT REHABILITATION
SALEM HOUSING AUTHORITY

PERMIT REVIEW / BID SET

ENLARGED UNIT PLANS
3 BEDROOM 2 BATH
ACCESSIBLE

PROJ NO.
21348

01.21.14

A6.21

COPYRIGHT - CARLETON HART ARCHITECTURE DO NOT REPRODUCE WITHOUT PERMISSION

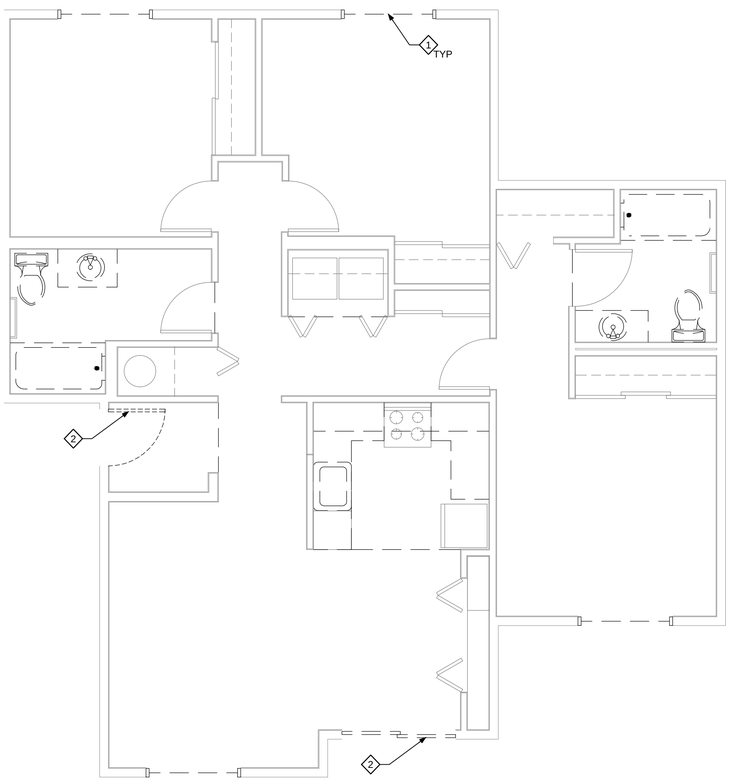

1 TYPICAL EXISTING 3 BED 2 BATH UNIT PLAN - DEMO
SCALE: 1/4" = 1'-0"

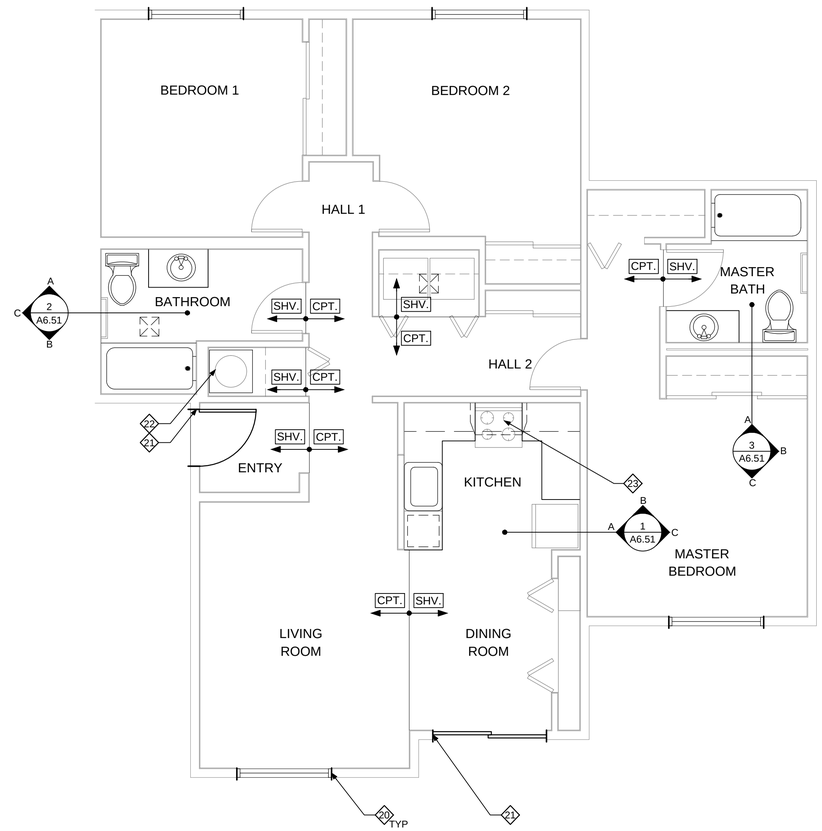

2 TYPICAL NEW 3 BED 2 BATH UNIT PLAN
SCALE: 1/4" = 1'-0"

DEMOLITION UNIT PLAN KEY NOTES

1. REMOVE (E) EXTERIOR WINDOWS & INTERIOR WOOD SILL. CUT & REMOVE (E) INTERIOR GYP BOARD AS NECESSARY TO ALLOW COMPLETE INSTALLATION OF WRB & ASSOCIATED FLASHINGS, TYP.
2. REMOVE (E) EXTERIOR DOORS & INTERIOR WOOD TRIM. CUT & REMOVE (E) INTERIOR GYP BOARD AS NECESSARY TO ALLOW COMPLETE INSTALLATION OF WRB & ASSOCIATED FLASHING, TYP.

NEW UNIT PLAN KEY NOTES

20. PATCH GYP BOARD AT NEW EXTERIOR WINDOWS & INSTALL NEW PAINT GRADE WOOD SILL, TYP.
21. PATCH GYP BOARD AT NEW EXTERIOR DOORS, TYP.
22. EXISTING WATER HEATER TO BE REINSTALLED. PROVIDE NEW SUPPLY, POWER & METAL DRIP PAN. ROUTE PRESSURE RELIEF TO EXTERIOR OF BUILDING ENCLOSURE.
23. NEW RANGE HOOD, PROVIDE CONNECTION TO (E) METAL DUCT. SEAL ALL DUCT CONNECTIONS & INSULATE DUCT UP TO BUILDING ENCLOSURE

UNIT PLAN LEGEND

- DASHED LINE INDICATES ITEM TO BE REMOVED
- EXISTING ITEM TO REMAIN
- EXISTING WALL TO REMAIN
- NEW VENTILATION FAN

GENERAL UNIT PLAN NOTES

A. DESCRIPTION OF DEMOLITION WORK IS NOT INTENDED TO BE ALL INCLUSIVE. FIELD VERIFICATION OF AREAS, MATERIALS AND SYSTEMS SCHEDULED FOR DEMOLITION AND NEW WORK IS REQUIRED PRIOR TO COMMENCEMENT OF ANY WORK.

B. ANY OBSERVED, KNOWN OR VERIFIED CONDITION(S) THAT ARE MATERIAL TO THE PERFORMANCE OF THE WORK DESCRIBED BY THE CONTRACT DOCUMENTS OR OTHERWISE REQUIRE INTERPRETATION SHALL BE PROMPTLY REPORTED TO THE ARCHITECT IN WRITING AS A REQUEST FOR INTERPRETATION IN SUCH FORM AS THE ARCHITECT MAY REQUIRE.

C. PRESERVE AND PROTECT (E) DATA, TELEPHONE, ELECTRICAL DEVICES (SWITCHES, OUTLETS, ETC.) AND ASSOCIATED CONDUIT AND CONDUCTORS FROM DEVICE LOCATION TO PANEL OR EQUIPMENT. SYSTEMS ARE TO REMAIN IN PLACE U.O.N..

D. AT LOCATIONS OF REMOVED OR DEMOLISHED ITEMS AND BUILDING COMPONENTS AND SYSTEMS WHERE ADJACENT SURFACES ARE TO REMAIN, PATCH AND REPAIR AFFECTED SURFACES. PROVIDE FINISH MATERIALS, COLORS AND TEXTURES TO MATCH SURROUNDING SURFACES OR AS INDICATED ON THE FINISH SCHEDULE. PATCHING AND REPAIR TO BE APPLIED FROM CORNER TO CORNER (SIDE/SIDE; TOP/BOTTOM).

E. REFER TO INTERIOR ELEVATIONS FOR ADDITIONAL INFORMATION AND COORDINATION REGARDING NEW AND REINSTALLED SYSTEMS, DEVICES AND ACCESSORIES MOUNTING HEIGHTS AND APPROXIMATE LOCATIONS.

F. REFER TO FLOOR PLANS & EXTERIOR ELEVATIONS FOR ALL EXTERIOR SCOPE OF WORK.

G. DIMENSIONS ARE TO FACE OF STUD U.O.N..

H. FOR WORK AT (E) WALLS, REMOVE (E) GYP BOARD TO EXPOSE FRAMING & INTERIOR WALL COMPONENTS. REMOVE ENOUGH MATERIAL FROM FRAMING MEMBER TO FRAMING MEMBER TO ALLOW CLEARANCE TO PERFORM THE WORK, TYP.

I. AT ALL 1ST FLOOR NON-ACESSIBLE UNITS, ITEMS TO BE REMOVED & STORED IN A PROTECTED LOCATION FOR RE-INSTALLATION INCLUDE & ARE NOT LIMITED TO THE FOLLOWING:
- WATER HEATER - PROVIDE NEW SUPPLY, POWER & DRIP PAN
- WASHER & DRYER - EXCEPT AT ACCESSIBLE UNITS
- REFRIGERATOR, RANGE & DISHWASHER - EXCEPT AT ACCESSIBLE UNITS

J. AT ALL 1ST FLOOR NON-ACCESSIBLE UNITS, ITEMS TO BE REMOVED & REPLACED WITH NEW INCLUDE & ARE NOT LIMITED TO THE FOLLOWING:
- COUNTERTOPS, UPPER & LOWER CABINETS
- ALL FLOOR FINISHES AND BASES
- SINKS, FAUCETS & EXPOSED CONNECTIONS
- LAVATORIES, FAUCETS & EXPOSED CONNECTIONS
- TOILETS & SUPPLY LINES
- BATHTUBS, SURROUNDS, CONTROLS & SHOWERHEADS
- RANGE HOODS, PROTECT SOFFITS & DUCTING
- GARBAGE DISPOSALS AT SINKS
- VENTILATION FANS IN BATHROOMS & LAUNDRY AREAS

K. SIGHT & HEARING IMPAIRED UNITS SHALL HAVE VISIBLE NOTIFICATION APPLIANCES TIED TO THE SMOKE DETECTION/ALARM SYSTEM & A HARD-WIRED ELECTRIC DOORBELL.

REGISTERED ARCHITECT
BRIAN D. CARLETON
PORTLAND, OREGON
2918
STATE OF OREGON

CARLETON HART ARCHITECTURE
322 nw 8th avenue portland, oregon 97209
t 503 243 2252 | f 503 243 3261 | carletonhart.com

PARKWAY VILLAGE : EAST
APARTMENT REHABILITATION
SALEM HOUSING AUTHORITY

PERMIT REVIEW / BID SET

ENLARGED UNIT PLANS
3 BEDROOM 2 BATH
1ST FLOOR

PROJ NO.
21348

01.21.14

A6.22

COPYRIGHT - CARLETON HART ARCHITECTURE DO NOT REPRODUCE WITHOUT PERMISSION

NOTE:

REQUIRED DIMENSIONS & CLEARANCES ARE THE MORE RESTRICTIVE OF EITHER UFAS OR ANSI A117.1

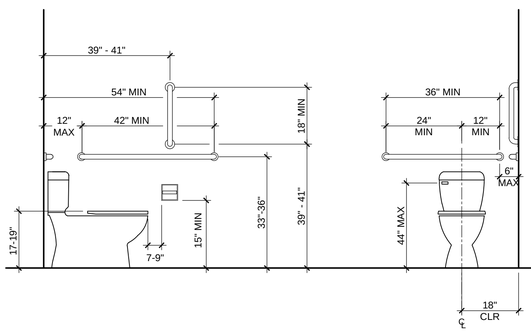

1 ACCESSIBLE TOILET & GRAB BARS
SCALE: 1/2" = 1'-0"

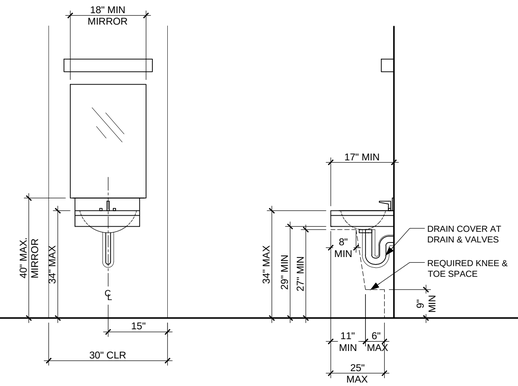

1 ACCESSIBLE LAVATORY & MIRROR
SCALE: 1/2" = 1'-0"

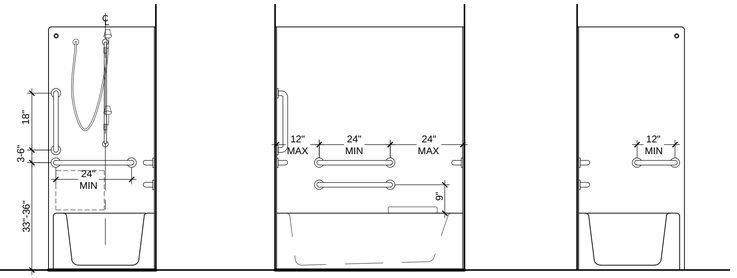

3 ACCESSIBLE TUB
SCALE: 1/2" = 1'-0"

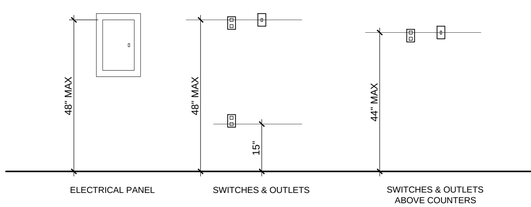

5 ELECTRICAL CONTROL DEVICES
SCALE: 1/2" = 1'-0"

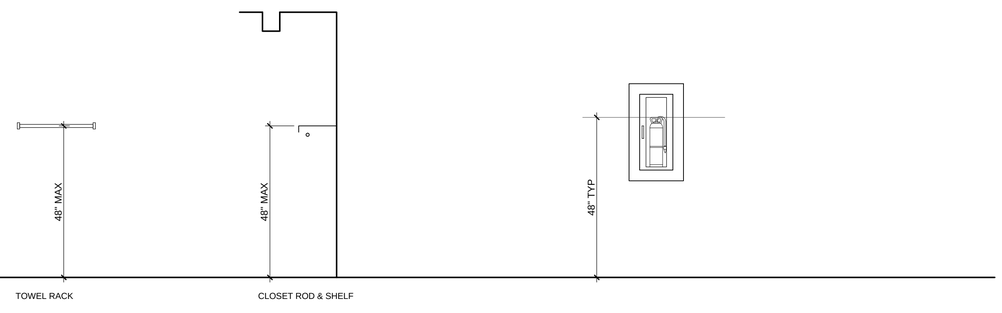

6 MISCELLANEOUS ITEMS
SCALE: 1/2" = 1'-0"

7 FIRE EXTINGUISHER CABINETS
SCALE: 1/2" = 1'-0"

8 NOT USED
SCALE: NTS

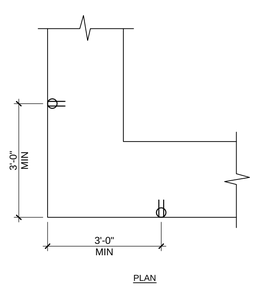

9 OUTLET AT COUNTERTOP CORNER
SCALE: 1/2" = 1'-0"

REGISTERED ARCHITECT
BRIAN D. CARLETON
PORTLAND, OREGON
2918
STATE OF OREGON

CARLETON HART ARCHITECTURE
322 nw 8th avenue portland, oregon 97209
t 503 243 2262 | f 503 243 3261 | carletonhart.com

PARKWAY VILLAGE : EAST
APARTMENT REHABILITATION
SALEM HOUSING AUTHORITY

PERMIT REVIEW / BID SET

INTERIOR ELEVATIONS
ACCESSIBLE FIXTURE DIMENSIONS

PROJ NO.
21348

01.21.14

COPYRIGHT - CARLETON HART ARCHITECTURE DO NOT REPRODUCE WITHOUT PERMISSION

A6.30

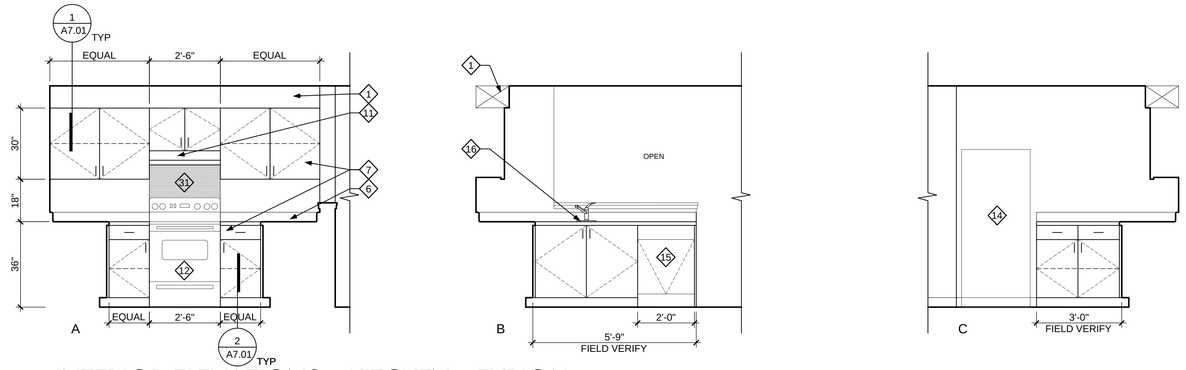

1 INTERIOR ELEVATIONS - KITCHEN - TYPICAL

SCALE: 3/8" = 1'-0"

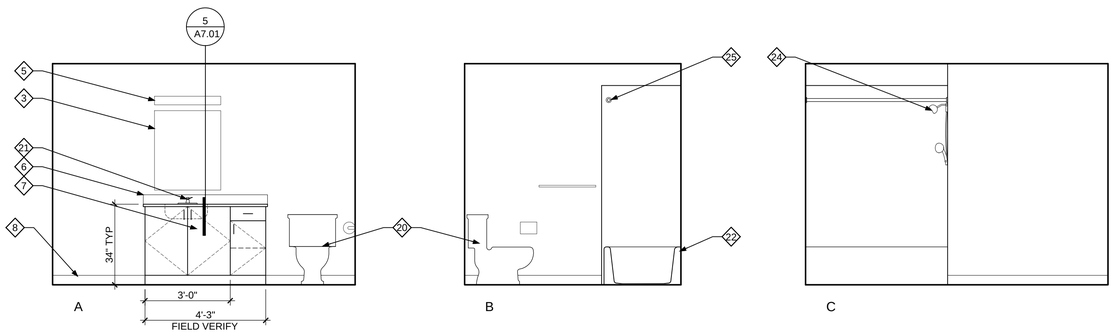

2 INTERIOR ELEVATION - BATHROOM - TYPICAL

SCALE: 3/8" = 1'-0"

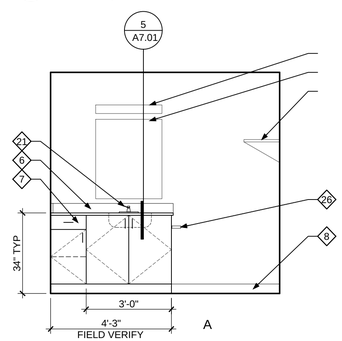

3 INTERIOR ELEVATION - MASTER BEDROOM CLOSET - TYPICAL

SCALE: 3/8" = 1'-0"

GENERAL INTERIOR ELEVATION NOTES

A. ANY OBSERVED, KNOWN, OR VERIFIED CONDITION(S) THAT ARE MATERIAL TO THE PERFORMANCE OF THE WORK DESCRIBED BY THE CONTRACT DOCUMENTS OR OTHERWISE REQUIRE INTERPRETATION SHALL BE PROMPTLY REPORTED TO THE ARCHITECT IN WRITING AS A REQUEST FOR INTERPRETATION IN SUCH FORM AS THE ARCHITECT MAY REQUIRE.

B. PRESERVE AND PROTECT (E) DATA, TELEPHONE, ELECTRICAL DEVICES (SWITCHES, OUTLETS, ETC.) AND ASSOCIATED CONDUIT AND CONDUCTORS FROM DEVICE LOCATION TO PANEL OR EQUIPMENT. SYSTEMS ARE TO REMAIN IN PLACE U.O.N..

C. AT LOCATIONS OF REMOVED OR DEMOLISHED ITEMS AND BUILDING COMPONENTS AND SYSTEMS WHERE ADJACENT SURFACES ARE TO REMAIN, PATCH AND REPAIR AFFECTED SURFACES. PROVIDE FINISH MATERIALS, COLORS, AND TEXTURES TO MATCH SURROUNDING SURFACES OR AS INDICATED ON THE FINISH SCHEDULE. PATCHING AND REPAIRING TO BE APPLIED FROM CORNER TO CORNER (SIDE / SIDE; TOP / BOTTOM).

D. INTERIOR DOORS NOT SHOWN FOR CLARITY.

E. REFER TO ENLARGED UNIT PLANS FOR ADDITIONAL INFORMATION AND COORDINATION REGARDING NEW AND REINSTALLED SYSTEMS, DEVICES, AND ACCESSORIES MOUNTING HEIGHTS AND APPROXIMATE LOCATIONS.

F. REFER TO SHEET A6.30 FOR GENERAL CLEARANCES & DIMENSIONS FOR ACCESSIBILITY.

INTERIOR ELEVATION KEY NOTES

1. EXISTING SOFFIT TO REMAIN, TYP.
2. EXISTING LIGHT TO REMAIN, TYP.
3. EXISTING MIRROR TO REMAIN, OR REINSTALL CENTERED OVER SINK IF NECESSARY, TYP.
4. EXISTING WASHER HOOK-UP AND DRYER POWER TO REMAIN, TYP.
5. EXISTING BATHROOM VANITY LIGHT TO BE REINSTALLED, CENTER OVER SINK
6. NEW PLASTIC LAMINATE COUNTERTOP WITH INTEGRAL 4-INCH BACKSPLASH
7. NEW CASEWORK (UPPER AND/OR LOWER)
8. NEW WALL BASE, TYP.
9. NEW SHELVING WITH MOUNTING BRACKETS AND ASSOCIATED HARDWARE
10. NEW SHELVING AND INTEGRAL CLOTHES ROD WITH MOUNTING BRACKETS AND ASSOCIATED HARDWARE
11. NEW RANGE HOOD, PROVIDE CONDUIT FROM HOOD TO SWITCH LOCATION AT WALL NEXT TO RANGE FOR HOOD CONTROL AT ACCESSIBLE UNITS. PROVIDE BLANK COVER AT ALL OTHER UNITS.
12. EXISTING RANGE, TYP. NEW RANGE AT ACCESSIBLE UNITS
13. PROVIDE CABINET BASE AT ACCESSIBLE RANGE, ALIGN COOK TOP SURFACE WITH ADJACENT COUNTERTOP.
14. RE-INSTALL EXISTING REFRIGERATOR, TYP. NEW REFRIGERATOR AT ACCESSIBLE UNITS
15. RE-INSTALL EXISTING DISHWASHER, TYP. NEW DISHWASHER AT ACCESSIBLE UNITS
16. NEW KITCHEN SINK WITH FAUCET AND GARBAGE DISPOSAL
17. FIXED DOOR PANELS AT ADA CABINETS, MATCH ADJACENT CABINET DOORS
18. RE-INSTALL EXISTING WATER HEATER
19. RE-INSTALL EXISTING WASHER AND DRYER, TYP. PROVIDE NEW WASHER & DRYER AT ACCESSIBLE UNITS
20. NEW TOILET
21. NEW BATHROOM LAVATORY AND FAUCET
22. NEW BATHTUB AND SURROUND WITH INTERNAL BLOCKING
23. SHOWER CONTROL AREA
24. NEW SHOWER HEAD AND CONTROLS
25. NEW SHOWER CURTAIN ROD
26. NEW TOWEL BAR
27. NEW TOILET PAPER DISPENSER
28. NEW BLOCKING FOR GRAB BAR(S) AT ALL UNITS
29. GRAB BAR, SEE A6.30
30. WOOD VENEER PANEL WITH TRIM
31. PLASTIC LAMINATE BACKSPLASH WITH METAL EDGING BEHIND STOVE
32. 30" MIN CLEAR WORK AREA
33. DRAIN COVER AT DRAIN & VALVES
34. REMOVABLE TUB SEAT
35. NEW WALL HUNG LAVATORY WITH 4" PLAM BACKSPLASH AND PIPE INSULATOR SLEEVE

COPYRIGHT - CARLETON HART ARCHITECTURE DO NOT REPRODUCE WITHOUT PERMISSION

CARLETON HART ARCHITECTURE
322 nw 8th avenue portland, oregon 97209
t 503 243 2252 | f 503 243 3261 | carletonhart.com

PARKWAY VILLAGE : EAST
APARTMENT REHABILITATION
SALEM HOUSING AUTHORITY

PERMIT REVIEW / BID SET

INTERIOR ELEVATIONS
2 BEDROOM -
TYPICAL

PROJ NO.
21348

01.21.14

A6.31

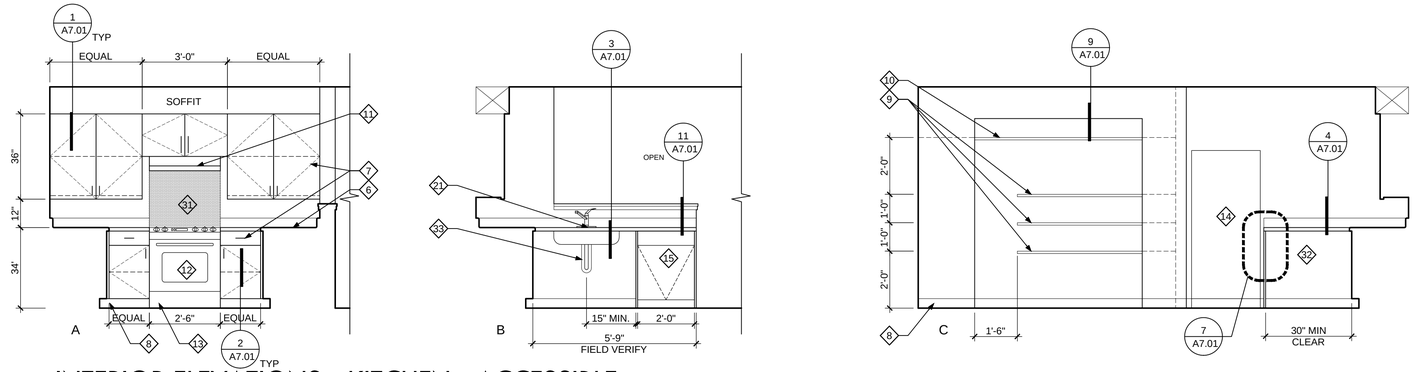

1 INTERIOR ELEVATIONS - KITCHEN - ACCESSIBLE

SCALE: 3/8" = 1'-0"

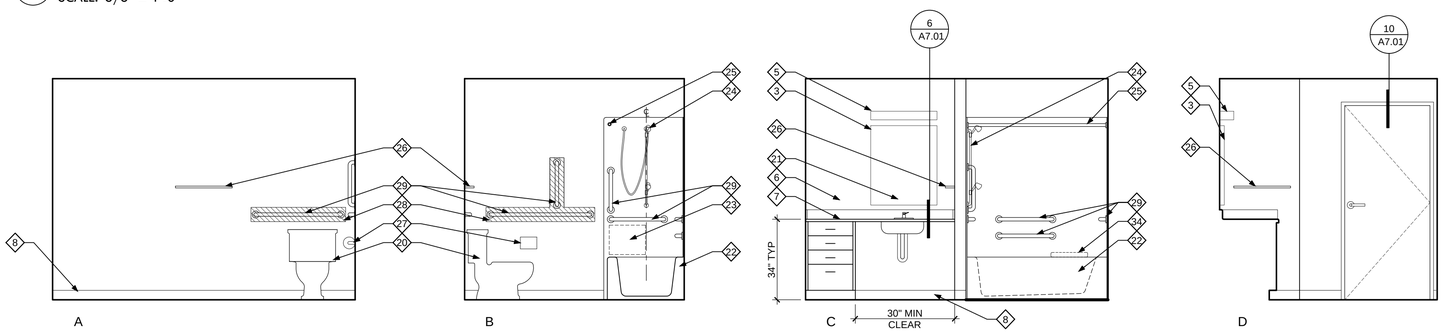

2 INTERIOR ELEVATION - BATHROOM - ACCESSIBLE

SCALE: 3/8" = 1'-0"

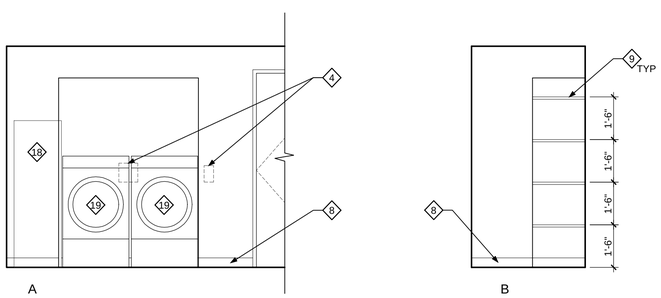

3 INTERIOR ELEVATION - HALL CLOSETS - ACCESSIBLE

SCALE: 3/8" = 1'-0"

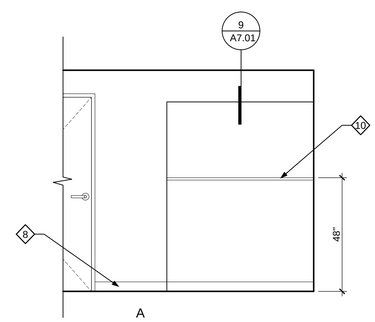

4 INTERIOR ELEVATION - BEDROOM 1 CLOSET - ACCESSIBLE

SCALE: 3/8" = 1'-0"

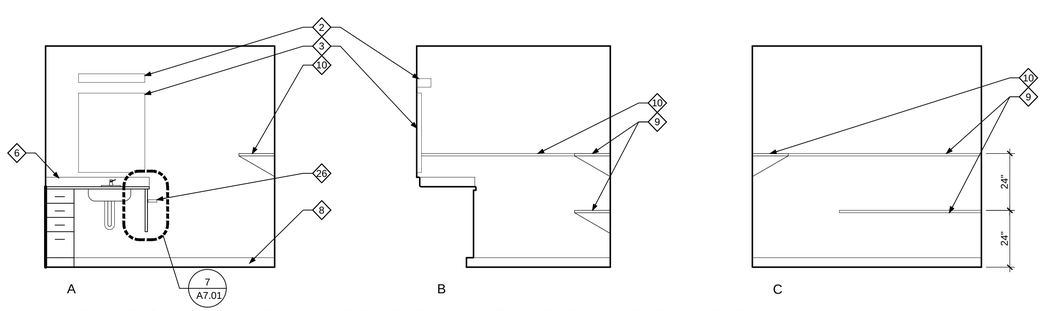

5 INTERIOR ELEVATION - BEDROOM 2 CLOSET - ACCESSIBLE

SCALE: 3/8" = 1'-0"

GENERAL INTERIOR ELEVATION NOTES

A. ANY OBSERVED, KNOWN, OR VERIFIED CONDITION(S) THAT ARE MATERIAL TO THE PERFORMANCE OF THE WORK DESCRIBED BY THE CONTRACT DOCUMENTS OR OTHERWISE REQUIRE INTERPRETATION SHALL BE PROMPTLY REPORTED TO THE ARCHITECT IN WRITING AS A REQUEST FOR INTERPRETATION IN SUCH FORM AS THE ARCHITECT MAY REQUIRE.

B. PRESERVE AND PROTECT (E) DATA, TELEPHONE, ELECTRICAL DEVICES (SWITCHES, OUTLETS, ETC.) AND ASSOCIATED CONDUIT AND CONDUCTORS FROM DEVICE LOCATION TO PANEL OR EQUIPMENT. SYSTEMS ARE TO REMAIN IN PLACE U.O.N..

C. AT LOCATIONS OF REMOVED OR DEMOLISHED ITEMS AND BUILDING COMPONENTS AND SYSTEMS WHERE ADJACENT SURFACES ARE TO REMAIN, PATCH AND REPAIR AFFECTED SURFACES. PROVIDE FINISH MATERIALS, COLORS, AND TEXTURES TO MATCH SURROUNDING SURFACES OR AS INDICATED ON THE FINISH SCHEDULE. PATCHING AND REPAIRING TO BE APPLIED FROM CORNER TO CORNER (SIDE / SIDE; TOP / BOTTOM).

D. INTERIOR DOORS NOT SHOWN FOR CLARITY.

E. REFER TO ENLARGED UNIT PLANS FOR ADDITIONAL INFORMATION AND COORDINATION REGARDING NEW AND REINSTALLED SYSTEMS, DEVICES, AND ACCESSORIES MOUNTING HEIGHTS AND APPROXIMATE LOCATIONS.

F. REFER TO SHEET A6.30 FOR GENERAL CLEARANCES & DIMENSIONS FOR ACCESSIBILITY.

INTERIOR ELEVATION KEY NOTES

1. EXISTING SOFFIT TO REMAIN, TYP.
2. EXISTING LIGHT TO REMAIN, TYP.
3. EXISTING MIRROR TO REMAIN, OR REINSTALL CENTERED OVER SINK IF NECESSARY, TYP.
4. EXISTING WASHER HOOK-UP AND DRYER POWER TO REMAIN, TYP.
5. EXISTING BATHROOM VANITY LIGHT TO BE REINSTALLED, CENTER OVER SINK
6. NEW PLASTIC LAMINATE COUNTERTOP WITH INTEGRAL 4-INCH BACKSPLASH
7. NEW CASEWORK (UPPER AND/OR LOWER)
8. NEW WALL BASE, TYP.
9. NEW SHELVING WITH MOUNTING BRACKETS AND ASSOCIATED HARDWARE
10. NEW SHELVING AND INTEGRAL CLOTHES ROD WITH MOUNTING BRACKETS AND ASSOCIATED HARDWARE
11. NEW RANGE HOOD, PROVIDE CONDUIT FROM HOOD TO SWITCH LOCATION AT WALL NEXT TO RANGE FOR HOOD CONTROL AT ACCESSIBLE UNITS. PROVIDE BLANK COVER AT ALL OTHER UNITS.
12. EXISTING RANGE, TYP. NEW RANGE AT ACCESSIBLE UNITS
13. PROVIDE CABINET BASE AT ACCESSIBLE RANGE, ALIGN COOK TOP SURFACE WITH ADJACENT COUNTERTOP.
14. RE-INSTALL EXISTING REFRIGERATOR, TYP. NEW REFRIGERATOR AT ACCESSIBLE UNITS
15. RE-INSTALL EXISTING DISHWASHER, TYP. NEW DISHWASHER AT ACCESSIBLE UNITS
16. NEW KITCHEN SINK WITH FAUCET AND GARBAGE DISPOSAL
17. FIXED DOOR PANELS AT ADA CABINETS, MATCH ADJACENT CABINET DOORS
18. RE-INSTALL EXISTING WATER HEATER
19. RE-INSTALL EXISTING WASHER AND DRYER, TYP. PROVIDE NEW WASHER & DRYER AT ACCESSIBLE UNITS
20. NEW TOILET
21. NEW BATHROOM LAVATORY AND FAUCET
22. NEW BATHTUB AND SURROUND WITH INTERNAL BLOCKING
23. SHOWER CONTROL AREA
24. NEW SHOWER HEAD AND CONTROLS
25. NEW SHOWER CURTAIN ROD
26. NEW TOWEL BAR
27. NEW TOILET PAPER DISPENSER
28. NEW BLOCKING FOR GRAB BAR(S) AT ALL UNITS
29. GRAB BAR, SEE A6.30
30. WOOD VENEER PANEL WITH TRIM
31. PLASTIC LAMINATE BACKSPLASH WITH METAL EDGING BEHIND STOVE
32. 30" MIN CLEAR WORK AREA
33. DRAIN COVER AT DRAIN & VALVES
34. REMOVABLE TUB SEAT
35. NEW WALL HUNG LAVATORY WITH 4" PLAM BACKSPLASH AND PIPE INSULATOR SLEEVE

COPYRIGHT - CARLETON HART ARCHITECTURE DO NOT REPRODUCE WITHOUT PERMISSION

CARLETON HART ARCHITECTURE
322 nw 8th avenue portland, oregon 97209
t 503 243 2262 | f 503 243 3261 | carletonhart.com

PARKWAY VILLAGE : EAST
APARTMENT REHABILITATION
SALEM HOUSING AUTHORITY

PERMIT REVIEW / BID SET

INTERIOR ELEVATIONS
2 BEDROOM - ACCESSIBLE

PROJ NO.
21348

01.21.14

A6.32

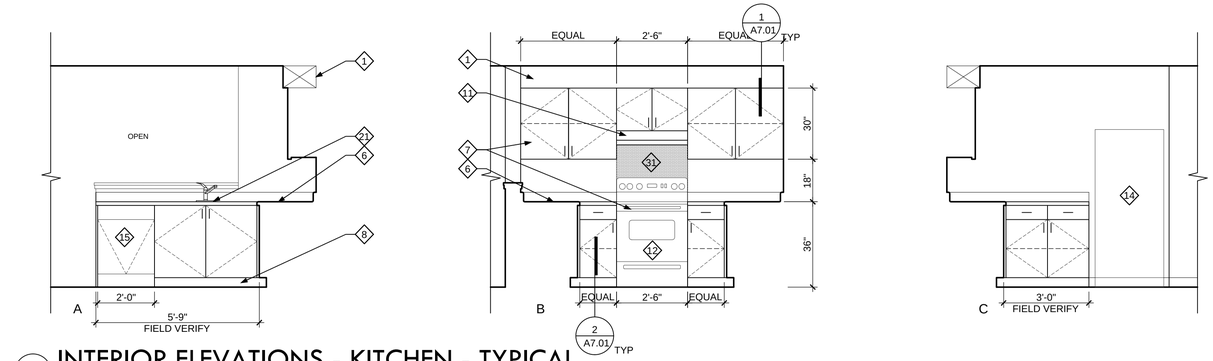

1 INTERIOR ELEVATIONS - KITCHEN - TYPICAL

SCALE: 3/8" = 1'-0"

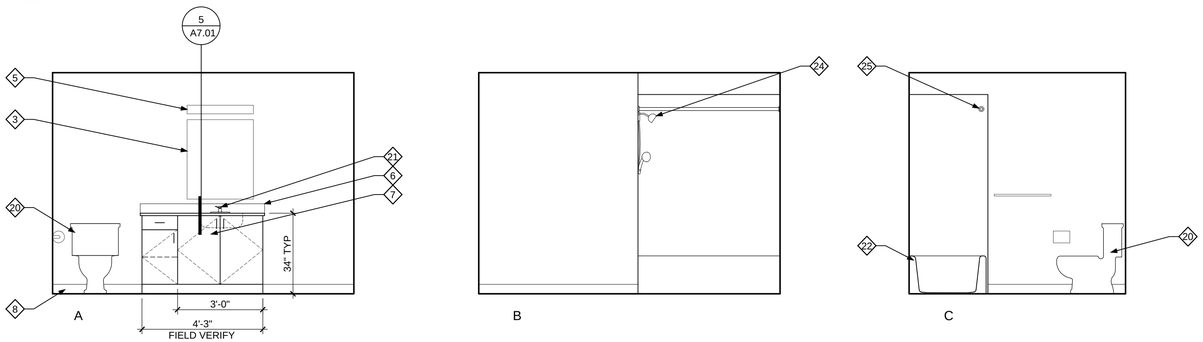

2 INTERIOR ELEVATION - BATHROOM 1 - TYPICAL

SCALE: 3/8" = 1'-0"

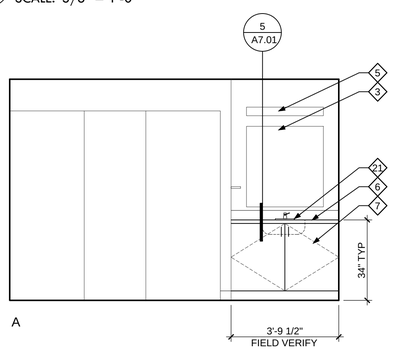

3 INTERIOR ELEVATION - BEDROOM 1 CLOSET & SINK - TYPICAL

SCALE: 3/8" = 1'-0"

GENERAL INTERIOR ELEVATION NOTES

A. ANY OBSERVED, KNOWN, OR VERIFIED CONDITION(S) THAT ARE MATERIAL TO THE PERFORMANCE OF THE WORK DESCRIBED BY THE CONTRACT DOCUMENTS OR OTHERWISE REQUIRE INTERPRETATION SHALL BE PROMPTLY REPORTED TO THE ARCHITECT IN WRITING AS A REQUEST FOR INTERPRETATION IN SUCH FORM AS THE ARCHITECT MAY REQUIRE.

B. PRESERVE AND PROTECT (E) DATA, TELEPHONE, ELECTRICAL DEVICES (SWITCHES, OUTLETS, ETC.) AND ASSOCIATED CONDUIT AND CONDUCTORS FROM DEVICE LOCATION TO PANEL OR EQUIPMENT. SYSTEMS ARE TO REMAIN IN PLACE U.O.N..

C. AT LOCATIONS OF REMOVED OR DEMOLISHED ITEMS AND BUILDING COMPONENTS AND SYSTEMS WHERE ADJACENT SURFACES ARE TO REMAIN, PATCH AND REPAIR AFFECTED SURFACES. PROVIDE FINISH MATERIALS, COLORS, AND TEXTURES TO MATCH SURROUNDING SURFACES OR AS INDICATED ON THE FINISH SCHEDULE. PATCHING AND REPAIRING TO BE APPLIED FROM CORNER TO CORNER (SIDE / SIDE; TOP / BOTTOM).

D. INTERIOR DOORS NOT SHOWN FOR CLARITY.

E. REFER TO ENLARGED UNIT PLANS FOR ADDITIONAL INFORMATION AND COORDINATION REGARDING NEW AND REINSTALLED SYSTEMS, DEVICES, AND ACCESSORIES MOUNTING HEIGHTS AND APPROXIMATE LOCATIONS.

F. REFER TO SHEET A6.30 FOR GENERAL CLEARANCES & DIMENSIONS FOR ACCESSIBILITY.

INTERIOR ELEVATION KEY NOTES

1. EXISTING SOFFIT TO REMAIN, TYP.
2. EXISTING LIGHT TO REMAIN, TYP.
3. EXISTING MIRROR TO REMAIN, OR REINSTALL CENTERED OVER SINK IF NECESSARY, TYP.
4. EXISTING WASHER HOOK-UP AND DRYER POWER TO REMAIN, TYP.
5. EXISTING BATHROOM VANITY LIGHT TO BE REINSTALLED, CENTER OVER SINK
6. NEW PLASTIC LAMINATE COUNTERTOP WITH INTEGRAL 4-INCH BACKSPLASH
7. NEW CASEWORK (UPPER AND/OR LOWER)
8. NEW WALL BASE, TYP.
9. NEW SHELVING WITH MOUNTING BRACKETS AND ASSOCIATED HARDWARE
10. NEW SHELVING AND INTEGRAL CLOTHES ROD WITH MOUNTING BRACKETS AND ASSOCIATED HARDWARE
11. NEW RANGE HOOD, PROVIDE CONDUIT FROM HOOD TO SWITCH LOCATION AT WALL NEXT TO RANGE FOR HOOD CONTROL AT ACCESSIBLE UNITS. PROVIDE BLANK COVER AT ALL OTHER UNITS.
12. EXISTING RANGE, TYP. NEW RANGE AT ACCESSIBLE UNITS
13. PROVIDE CABINET BASE AT ACCESSIBLE RANGE, ALIGN COOK TOP SURFACE WITH ADJACENT COUNTERTOP.
14. RE-INSTALL EXISTING REFRIGERATOR, TYP. NEW REFRIGERATOR AT ACCESSIBLE UNITS
15. RE-INSTALL EXISTING DISHWASHER, TYP. NEW DISHWASHER AT ACCESSIBLE UNITS
16. NEW KITCHEN SINK WITH FAUCET AND GARBAGE DISPOSAL
17. FIXED DOOR PANELS AT ADA CABINETS, MATCH ADJACENT CABINET DOORS
18. RE-INSTALL EXISTING WATER HEATER
19. RE-INSTALL EXISTING WASHER AND DRYER, TYP. PROVIDE NEW WASHER & DRYER AT ACCESSIBLE UNITS
20. NEW TOILET
21. NEW BATHROOM LAVATORY AND FAUCET
22. NEW BATHTUB AND SURROUND WITH INTERNAL BLOCKING
23. SHOWER CONTROL AREA
24. NEW SHOWER HEAD AND CONTROLS
25. NEW SHOWER CURTAIN ROD
26. NEW TOWEL BAR
27. NEW TOILET PAPER DISPENSER
28. NEW BLOCKING FOR GRAB BAR(S) AT ALL UNITS
29. GRAB BAR, SEE A6.30
30. WOOD VENEER PANEL WITH TRIM
31. PLASTIC LAMINATE BACKSPLASH WITH METAL EDGING BEHIND STOVE
32. 30" MIN CLEAR WORK AREA
33. DRAIN COVER AT DRAIN & VALVES
34. REMOVABLE TUB SEAT
35. NEW WALL HUNG LAVATORY WITH 4" PLAM BACKSPLASH AND PIPE INSULATOR SLEEVE

COPYRIGHT - CARLETON HART ARCHITECTURE DO NOT REPRODUCE WITHOUT PERMISSION

CARLETON HART ARCHITECTURE
322 nw 8th avenue portland, oregon 97209
t 503 243 2252 | f 503 243 3261 | carletonhart.com

PARKWAY VILLAGE : EAST
APARTMENT REHABILITATION
SALEM HOUSING AUTHORITY

PERMIT REVIEW / BID SET

INTERIOR ELEVATIONS
3 BEDROOM 1 BATH - TYPICAL

PROJ NO.
21348

01.21.14

A6.41

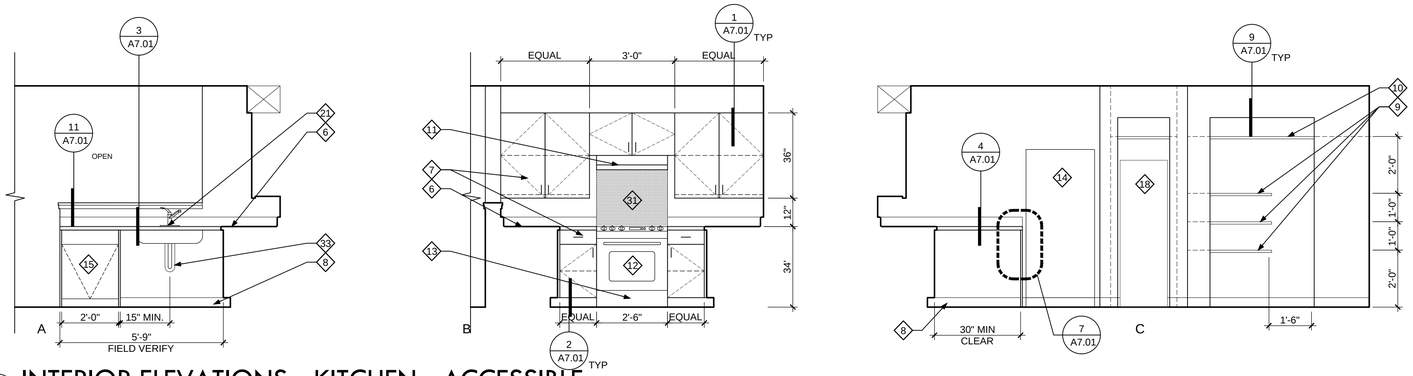

1 INTERIOR ELEVATIONS - KITCHEN - ACCESSIBLE

SCALE: 3/8" = 1'-0"

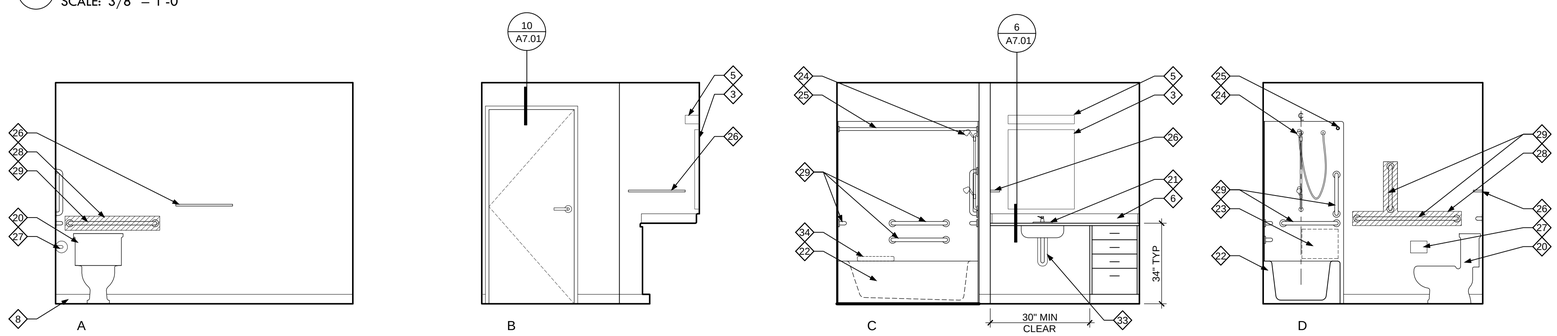

2 INTERIOR ELEVATION - BATHROOM 1 - ACCESSIBLE

SCALE: 3/8" = 1'-0"

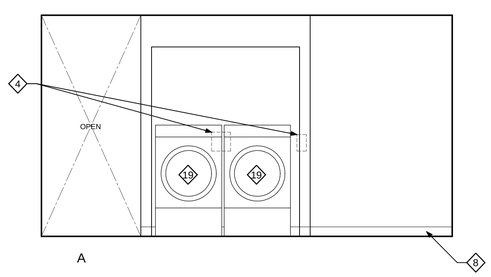

3 INTERIOR ELEVATION - HALL CLOSETS - ACCESSIBLE

SCALE: 3/8" = 1'-0"

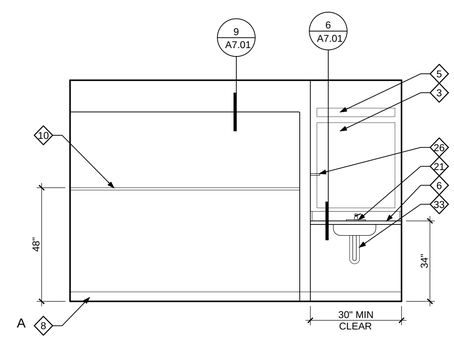

4 INTERIOR ELEVATION - BEDROOM 1 CLOSET & SINK - ACCESSIBLE

SCALE: 3/8" = 1'-0"

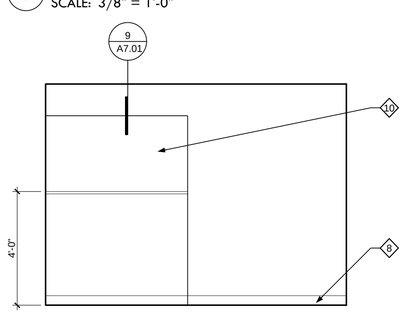

5 INTERIOR ELEVATION - BEDROOM 2 CLOSET - ACCESSIBLE

SCALE: 3/8" = 1'-0"

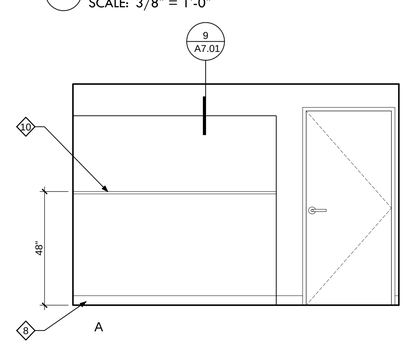

6 INTERIOR ELEVATION - BEDROOM 3 CLOSET - ACCESSIBLE

SCALE: 3/8" = 1'-0"

GENERAL INTERIOR ELEVATION NOTES

A. ANY OBSERVED, KNOWN, OR VERIFIED CONDITION(S) THAT ARE MATERIAL TO THE PERFORMANCE OF THE WORK DESCRIBED BY THE CONTRACT DOCUMENTS OR OTHERWISE REQUIRE INTERPRETATION SHALL BE PROMPTLY REPORTED TO THE ARCHITECT IN WRITING AS A REQUEST FOR INTERPRETATION IN SUCH FORM AS THE ARCHITECT MAY REQUIRE.

B. PRESERVE AND PROTECT (E) DATA, TELEPHONE, ELECTRICAL DEVICES (SWITCHES, OUTLETS, ETC.) AND ASSOCIATED CONDUIT AND CONDUCTORS FROM DEVICE LOCATION TO PANEL OR EQUIPMENT. SYSTEMS ARE TO REMAIN IN PLACE U.O.N..

C. AT LOCATIONS OF REMOVED OR DEMOLISHED ITEMS AND BUILDING COMPONENTS AND SYSTEMS WHERE ADJACENT SURFACES ARE TO REMAIN, PATCH AND REPAIR AFFECTED SURFACES. PROVIDE FINISH MATERIALS, COLORS, AND TEXTURES TO MATCH SURROUNDING SURFACES OR AS INDICATED ON THE FINISH SCHEDULE. PATCHING AND REPAIRING TO BE APPLIED FROM CORNER TO CORNER (SIDE / SIDE; TOP / BOTTOM).

D. INTERIOR DOORS NOT SHOWN FOR CLARITY.

E. REFER TO ENLARGED UNIT PLANS FOR ADDITIONAL INFORMATION AND COORDINATION REGARDING NEW AND REINSTALLED SYSTEMS, DEVICES, AND ACCESSORIES MOUNTING HEIGHTS AND APPROXIMATE LOCATIONS.

F. REFER TO SHEET A6.30 FOR GENERAL CLEARANCES & DIMENSIONS FOR ACCESSIBILITY.

INTERIOR ELEVATION KEY NOTES

1. EXISTING SOFFIT TO REMAIN, TYP.
2. EXISTING LIGHT TO REMAIN, TYP.
3. EXISTING MIRROR TO REMAIN, OR REINSTALL CENTERED OVER SINK IF NECESSARY, TYP.
4. EXISTING WASHER HOOK-UP AND DRYER POWER TO REMAIN, TYP.
5. EXISTING BATHROOM VANITY LIGHT TO BE REINSTALLED, CENTER OVER SINK
6. NEW PLASTIC LAMINATE COUNTERTOP WITH INTEGRAL 4-INCH BACKSPLASH
7. NEW CASEWORK (UPPER AND/OR LOWER)
8. NEW WALL BASE, TYP.
9. NEW SHELVING WITH MOUNTING BRACKETS AND ASSOCIATED HARDWARE
10. NEW SHELVING AND INTEGRAL CLOTHES ROD WITH MOUNTING BRACKETS AND ASSOCIATED HARDWARE
11. NEW RANGE HOOD, PROVIDE CONDUIT FROM HOOD TO SWITCH LOCATION AT WALL NEXT TO RANGE FOR HOOD CONTROL AT ACCESSIBLE UNITS. PROVIDE BLANK COVER AT ALL OTHER UNITS.
12. EXISTING RANGE, TYP. NEW RANGE AT ACCESSIBLE UNITS
13. PROVIDE CABINET BASE AT ACCESSIBLE RANGE, ALIGN COOK TOP SURFACE WITH ADJACENT COUNTERTOP.
14. RE-INSTALL EXISTING REFRIGERATOR, TYP. NEW REFRIGERATOR AT ACCESSIBLE UNITS
15. RE-INSTALL EXISTING DISHWASHER, TYP. NEW DISHWASHER AT ACCESSIBLE UNITS
16. NEW KITCHEN SINK WITH FAUCET AND GARBAGE DISPOSAL
17. FIXED DOOR PANELS AT ADA CABINETS, MATCH ADJACENT CABINET DOORS
18. RE-INSTALL EXISTING WATER HEATER
19. RE-INSTALL EXISTING WASHER AND DRYER, TYP. PROVIDE NEW WASHER & DRYER AT ACCESSIBLE UNITS
20. NEW TOILET
21. NEW BATHROOM LAVATORY AND FAUCET
22. NEW BATHTUB AND SURROUND WITH INTERNAL BLOCKING
23. SHOWER CONTROL AREA
24. NEW SHOWER HEAD AND CONTROLS
25. NEW SHOWER CURTAIN ROD
26. NEW TOWEL BAR
27. NEW TOILET PAPER DISPENSER
28. NEW BLOCKING FOR GRAB BAR(S) AT ALL UNITS
29. GRAB BAR, SEE A6.30
30. WOOD VENEER PANEL WITH TRIM
31. PLASTIC LAMINATE BACKSPLASH WITH METAL EDGING BEHIND STOVE
32. 30" MIN CLEAR WORK AREA
33. DRAIN COVER AT DRAIN & VALVES
34. REMOVABLE TUB SEAT
35. NEW WALL HUNG LAVATORY WITH 4" PLAM BACKSPLASH AND PIPE INSULATOR SLEEVE

COPYRIGHT - CARLETON HART ARCHITECTURE DO NOT REPRODUCE WITHOUT PERMISSION

CARLETON HART ARCHITECTURE
322 nw 8th avenue portland, oregon 97209
t 503 243 2252 | f 503 243 3261 | carletonhart.com

PARKWAY VILLAGE : EAST
APARTMENT REHABILITATION
SALEM HOUSING AUTHORITY

PERMIT REVIEW / BID SET

INTERIOR ELEVATIONS
3 BEDROOM 1 BATH - ACCESSIBLE

PROJ NO.
21348

01.21.14

A6.42

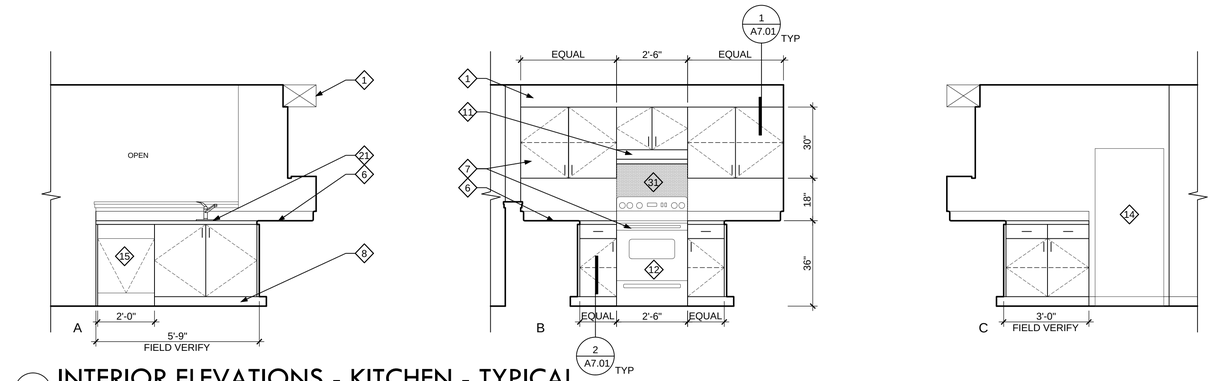

1 INTERIOR ELEVATIONS - KITCHEN - TYPICAL

SCALE: 3/8" = 1'-0"

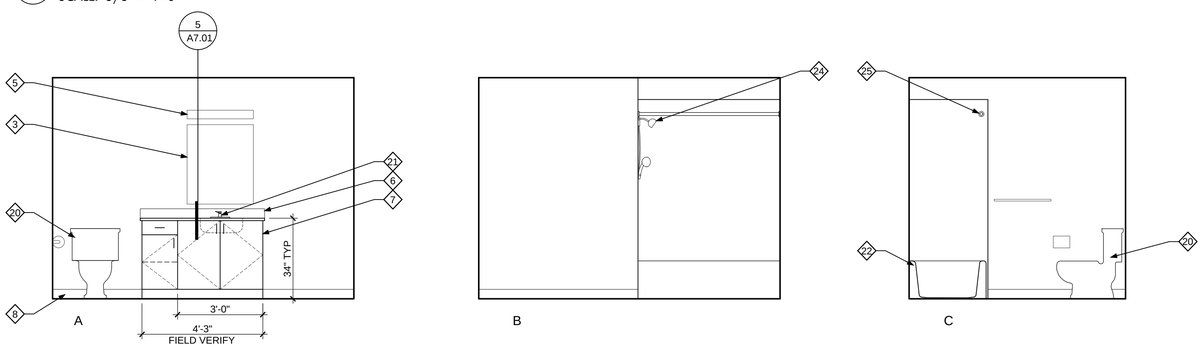

2 INTERIOR ELEVATION - BATHROOM 1 - TYPICAL

SCALE: 3/8" = 1'-0"

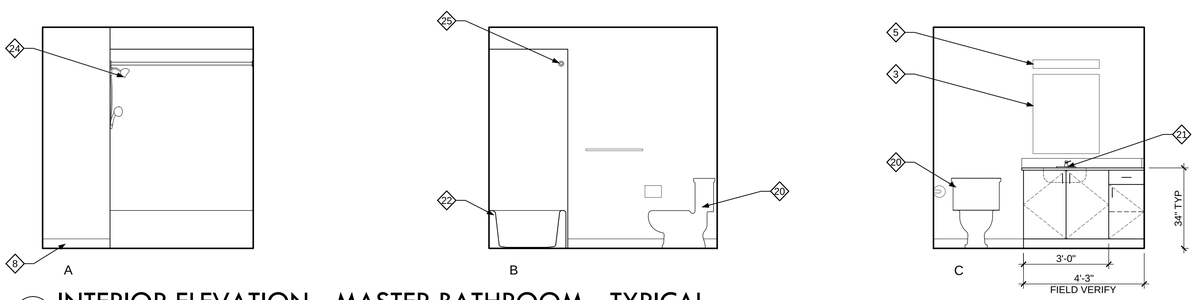

3 INTERIOR ELEVATION - MASTER BATHROOM - TYPICAL

SCALE: 3/8" = 1'-0"

GENERAL INTERIOR ELEVATION NOTES

A. ANY OBSERVED, KNOWN, OR VERIFIED CONDITION(S) THAT ARE MATERIAL TO THE PERFORMANCE OF THE WORK DESCRIBED BY THE CONTRACT DOCUMENTS OR OTHERWISE REQUIRE INTERPRETATION SHALL BE PROMPTLY REPORTED TO THE ARCHITECT IN WRITING AS A REQUEST FOR INTERPRETATION IN SUCH FORM AS THE ARCHITECT MAY REQUIRE.

B. PRESERVE AND PROTECT (E) DATA, TELEPHONE, ELECTRICAL DEVICES (SWITCHES, OUTLETS, ETC.) AND ASSOCIATED CONDUIT AND CONDUCTORS FROM DEVICE LOCATION TO PANEL OR EQUIPMENT. SYSTEMS ARE TO REMAIN IN PLACE U.O.N..

C. AT LOCATIONS OF REMOVED OR DEMOLISHED ITEMS AND BUILDING COMPONENTS AND SYSTEMS WHERE ADJACENT SURFACES ARE TO REMAIN, PATCH AND REPAIR AFFECTED SURFACES. PROVIDE FINISH MATERIALS, COLORS, AND TEXTURES TO MATCH SURROUNDING SURFACES OR AS INDICATED ON THE FINISH SCHEDULE. PATCHING AND REPAIRING TO BE APPLIED FROM CORNER TO CORNER (SIDE / SIDE; TOP / BOTTOM).

D. INTERIOR DOORS NOT SHOWN FOR CLARITY.

E. REFER TO ENLARGED UNIT PLANS FOR ADDITIONAL INFORMATION AND COORDINATION REGARDING NEW AND REINSTALLED SYSTEMS, DEVICES, AND ACCESSORIES MOUNTING HEIGHTS AND APPROXIMATE LOCATIONS.

F. REFER TO SHEET A6.30 FOR GENERAL CLEARANCES & DIMENSIONS FOR ACCESSIBILITY.

INTERIOR ELEVATION KEY NOTES

1. EXISTING SOFFIT TO REMAIN, TYP.
2. EXISTING LIGHT TO REMAIN, TYP.
3. EXISTING MIRROR TO REMAIN, OR REINSTALL CENTERED OVER SINK IF NECESSARY, TYP.
4. EXISTING WASHER HOOK-UP AND DRYER POWER TO REMAIN, TYP.
5. EXISTING BATHROOM VANITY LIGHT TO BE REINSTALLED, CENTER OVER SINK
6. NEW PLASTIC LAMINATE COUNTERTOP WITH INTEGRAL 4-INCH BACKSPLASH
7. NEW CASEWORK (UPPER AND/OR LOWER)
8. NEW WALL BASE, TYP.
9. NEW SHELVING WITH MOUNTING BRACKETS AND ASSOCIATED HARDWARE
10. NEW SHELVING AND INTEGRAL CLOTHES ROD WITH MOUNTING BRACKETS AND ASSOCIATED HARDWARE
11. NEW RANGE HOOD, PROVIDE CONDUIT FROM HOOD TO SWITCH LOCATION AT WALL NEXT TO RANGE FOR HOOD CONTROL AT ACCESSIBLE UNITS. PROVIDE BLANK COVER AT ALL OTHER UNITS.
12. EXISTING RANGE, TYP. NEW RANGE AT ACCESSIBLE UNITS
13. PROVIDE CABINET BASE AT ACCESSIBLE RANGE, ALIGN COOK TOP SURFACE WITH ADJACENT COUNTERTOP.
14. RE-INSTALL EXISTING REFRIGERATOR, TYP. NEW REFRIGERATOR AT ACCESSIBLE UNITS
15. RE-INSTALL EXISTING DISHWASHER, TYP. NEW DISHWASHER AT ACCESSIBLE UNITS
16. NEW KITCHEN SINK WITH FAUCET AND GARBAGE DISPOSAL
17. FIXED DOOR PANELS AT ADA CABINETS, MATCH ADJACENT CABINET DOORS
18. RE-INSTALL EXISTING WATER HEATER
19. RE-INSTALL EXISTING WASHER AND DRYER, TYP. PROVIDE NEW WASHER & DRYER AT ACCESSIBLE UNITS
20. NEW TOILET
21. NEW BATHROOM LAVATORY AND FAUCET
22. NEW BATHTUB AND SURROUND WITH INTERNAL BLOCKING
23. SHOWER CONTROL AREA
24. NEW SHOWER HEAD AND CONTROLS
25. NEW SHOWER CURTAIN ROD
26. NEW TOWEL BAR
27. NEW TOILET PAPER DISPENSER
28. NEW BLOCKING FOR GRAB BAR(S) AT ALL UNITS
29. GRAB BAR, SEE A6.30
30. WOOD VENEER PANEL WITH TRIM
31. PLASTIC LAMINATE BACKSPLASH WITH METAL EDGING BEHIND STOVE
32. 30" MIN CLEAR WORK AREA
33. DRAIN COVER AT DRAIN & VALVES
34. REMOVABLE TUB SEAT
35. NEW WALL HUNG LAVATORY WITH 4" PLAM BACKSPLASH AND PIPE INSULATOR SLEEVE

COPYRIGHT - CARLETON HART ARCHITECTURE DO NOT REPRODUCE WITHOUT PERMISSION

REGISTERED ARCHITECT
BRIAN D. CARLETON
PORTLAND, OREGON
2918
STATE OF OREGON

CARLETON HART ARCHITECTURE
322 nw 8th avenue portland, oregon 97209
t 503 243 2252 | f 503 243 3261 | carletonhart.com

PARKWAY VILLAGE : EAST
APARTMENT REHABILITATION
SALEM HOUSING AUTHORITY

PERMIT REVIEW / BID SET

INTERIOR ELEVATIONS
3 BEDROOM 2 BATH - TYPICAL

PROJ NO.
21348

01.21.14

A6.51

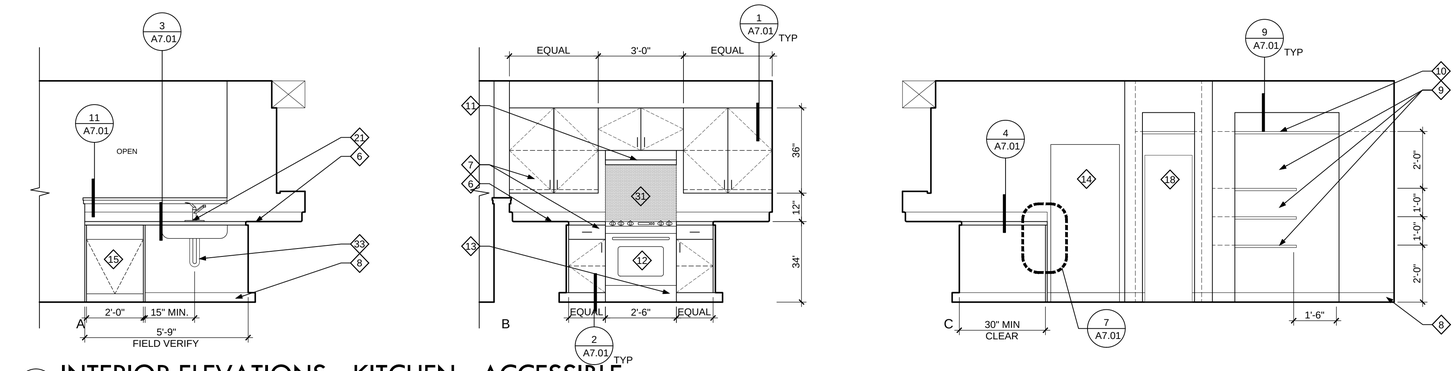

1 INTERIOR ELEVATIONS - KITCHEN - ACCESSIBLE

SCALE: 3/8" = 1'-0"

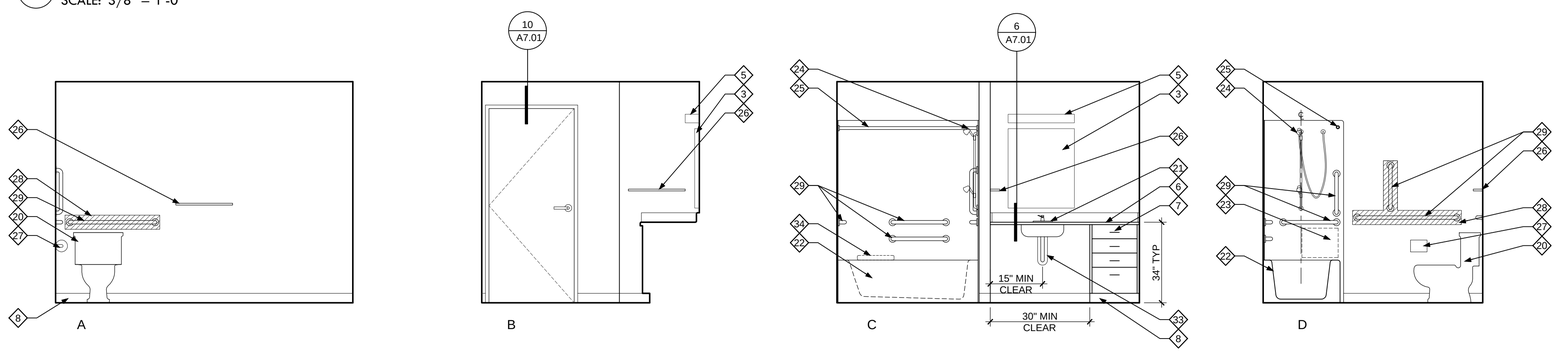

2 INTERIOR ELEVATION - BATHROOM 1 - ACCESSIBLE

SCALE: 3/8" = 1'-0"

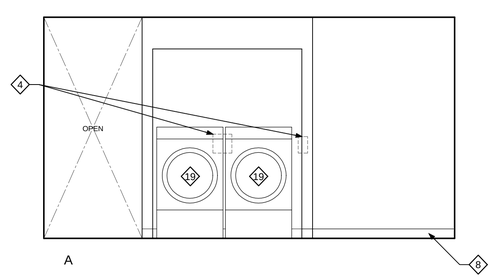

3 INTERIOR ELEVATION - HALL CLOSETS - ACCESSIBLE

SCALE: 3/8" = 1'-0"

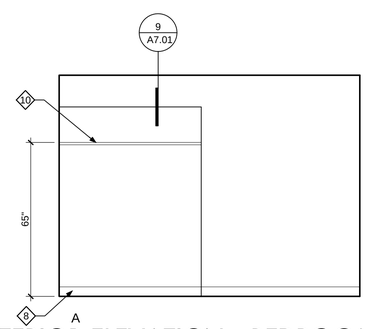

4 INTERIOR ELEVATION - BEDROOM 2 CLOSET - ACCESSIBLE

SCALE: 3/8" = 1'-0"

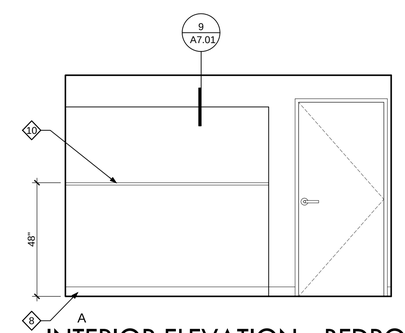

5 INTERIOR ELEVATION - BEDROOM 3 CLOSET - ACCESSIBLE

SCALE: 3/8" = 1'-0"

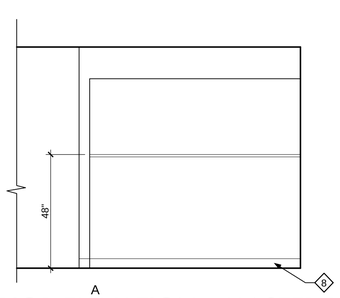

6 INTERIOR ELEVATION - MASTER BED. CLOSET - ACCESSIBLE

SCALE: 3/8" = 1'-0"

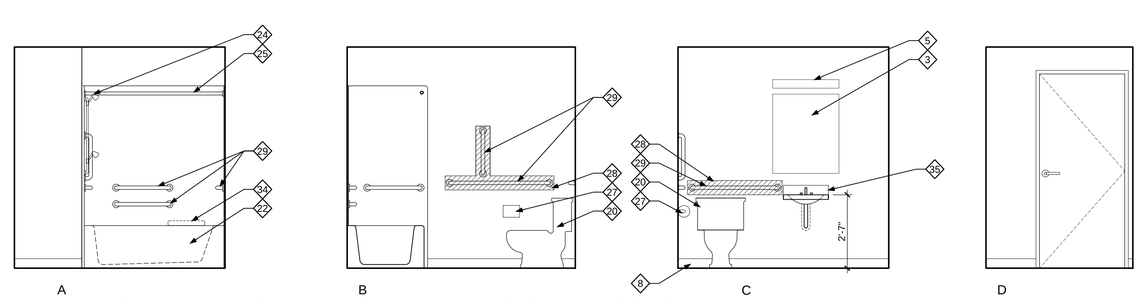

7 INTERIOR ELEVATION - MASTER BATHROOM - ACCESSIBLE

SCALE: 3/8" = 1'-0"

GENERAL INTERIOR ELEVATION NOTES

A. ANY OBSERVED, KNOWN, OR VERIFIED CONDITION(S) THAT ARE MATERIAL TO THE PERFORMANCE OF THE WORK DESCRIBED BY THE CONTRACT DOCUMENTS OR OTHERWISE REQUIRE INTERPRETATION SHALL BE PROMPTLY REPORTED TO THE ARCHITECT IN WRITING AS A REQUEST FOR INTERPRETATION IN SUCH FORM AS THE ARCHITECT MAY REQUIRE.

B. PRESERVE AND PROTECT (E) DATA, TELEPHONE, ELECTRICAL DEVICES (SWITCHES, OUTLETS, ETC.) AND ASSOCIATED CONDUIT AND CONDUCTORS FROM DEVICE LOCATION TO PANEL OR EQUIPMENT. SYSTEMS ARE TO REMAIN IN PLACE U.O.N..

C. AT LOCATIONS OF REMOVED OR DEMOLISHED ITEMS AND BUILDING COMPONENTS AND SYSTEMS WHERE ADJACENT SURFACES ARE TO REMAIN, PATCH AND REPAIR AFFECTED SURFACES. PROVIDE FINISH MATERIALS, COLORS, AND TEXTURES TO MATCH SURROUNDING SURFACES OR AS INDICATED ON THE FINISH SCHEDULE. PATCHING AND REPAIRING TO BE APPLIED FROM CORNER TO CORNER (SIDE / SIDE; TOP / BOTTOM).

D. INTERIOR DOORS NOT SHOWN FOR CLARITY.

E. REFER TO ENLARGED UNIT PLANS FOR ADDITIONAL INFORMATION AND COORDINATION REGARDING NEW AND REINSTALLED SYSTEMS, DEVICES, AND ACCESSORIES MOUNTING HEIGHTS AND APPROXIMATE LOCATIONS.

F. REFER TO SHEET A6.30 FOR GENERAL CLEARANCES & DIMENSIONS FOR ACCESSIBILITY.

INTERIOR ELEVATION KEY NOTES

1. EXISTING SOFFIT TO REMAIN, TYP.
2. EXISTING LIGHT TO REMAIN, TYP.
3. EXISTING MIRROR TO REMAIN, OR REINSTALL CENTERED OVER SINK IF NECESSARY, TYP.
4. EXISTING WASHER HOOK-UP AND DRYER POWER TO REMAIN, TYP.
5. EXISTING BATHROOM VANITY LIGHT TO BE REINSTALLED, CENTER OVER SINK
6. NEW PLASTIC LAMINATE COUNTERTOP WITH INTEGRAL 4-INCH BACKSPLASH
7. NEW CASEWORK (UPPER AND/OR LOWER)
8. NEW WALL BASE, TYP.
9. NEW SHELVING WITH MOUNTING BRACKETS AND ASSOCIATED HARDWARE
10. NEW SHELVING AND INTEGRAL CLOTHES ROD WITH MOUNTING BRACKETS AND ASSOCIATED HARDWARE
11. NEW RANGE HOOD. PROVIDE CONDUIT FROM HOOD TO SWITCH LOCATION AT WALL NEXT TO RANGE FOR HOOD CONTROL AT ACCESSIBLE UNITS. PROVIDE BLANK COVER AT ALL OTHER UNITS.
12. EXISTING RANGE, TYP. NEW RANGE AT ACCESSIBLE UNITS
13. PROVIDE CABINET BASE AT ACCESSIBLE RANGE, ALIGN COOK TOP SURFACE WITH ADJACENT COUNTERTOP.
14. RE-INSTALL EXISTING REFRIGERATOR, TYP. NEW REFRIGERATOR AT ACCESSIBLE UNITS
15. RE-INSTALL EXISTING DISHWASHER, TYP. NEW DISHWASHER AT ACCESSIBLE UNITS
16. NEW KITCHEN SINK WITH FAUCET AND GARBAGE DISPOSAL
17. FIXED DOOR PANELS AT ADA CABINETS, MATCH ADJACENT CABINET DOORS
18. RE-INSTALL EXISTING WATER HEATER
19. RE-INSTALL EXISTING WASHER AND DRYER, TYP. PROVIDE NEW WASHER & DRYER AT ACCESSIBLE UNITS
20. NEW TOILET
21. NEW BATHROOM LAVATORY AND FAUCET
22. NEW BATHTUB AND SURROUND WITH INTERNAL BLOCKING
23. SHOWER CONTROL AREA
24. NEW SHOWER HEAD AND CONTROLS
25. NEW SHOWER CURTAIN ROD
26. NEW TOWEL BAR
27. NEW TOILET PAPER DISPENSER
28. NEW BLOCKING FOR GRAB BAR(S) AT ALL UNITS
29. GRAB BAR, SEE A6.30
30. WOOD VENEER PANEL WITH TRIM
31. PLASTIC LAMINATE BACKSPLASH WITH METAL EDGING BEHIND STOVE
32. 30" MIN CLEAR WORK AREA
33. DRAIN COVER AT DRAIN & VALVES
34. REMOVABLE TUB SEAT
35. NEW WALL HUNG LAVATORY WITH 4" PLAM BACKSPLASH AND PIPE INSULATOR SLEEVE

COPYRIGHT - CARLETON HART ARCHITECTURE DO NOT REPRODUCE WITHOUT PERMISSION

REGISTERED ARCHITECT
BRIAN D. CARLETON
PORTLAND, OREGON
2918
STATE OF OREGON

CARLETON HART ARCHITECTURE
322 nw 8th avenue portland, oregon 97209
t 503 243 2252 | f 503 243 3261 | carletonhart.com

PARKWAY VILLAGE : EAST
APARTMENT REHABILITATION
SALEM HOUSING AUTHORITY

PERMIT REVIEW / BID SET

INTERIOR ELEVATIONS
3 BEDROOM 2 BATH - ACCESSIBLE

PROJ NO.
21348

01.21.14

A6.52

FINISH LEGEND

CODE	DESCRIPTION	MANUFACTURER	PRODUCT	COLOR/FINISH	GENERAL LOCATION
FLOOR					
CPT-1	CARPET	TBD	TBD	TBD	UNIT LIVING ROOM & BEDROOM
SV-1	SHEET VINYL	TBD	TBD	TBD	UNIT KITCHEN & BATH
BASE					
B-1	PAINT GRADE WOOD BASE	-	PROFILE TO MATCH EXISTING	PAINT, TBD	AT CARPET
B-2	4" RUBBER BASE	TBD - SEE SPECS.	4" COVE BASE	TBD	AT SHEET VINYL
PAINT					
PT-1	PAINT	SEE SPECIFICATIONS	INTERIOR LOW LUSTER ACRYLIC ENAMEL	TBD	UNIT CEILINGS
PT-2	PAINT	SEE SPECIFICATIONS	INTERIOR LOW LUSTER ACRYLIC ENAMEL	TBD	UNIT WALLS
PT-3	PAINT	SEE SPECIFICATIONS	EXTERIOR SEMI-GLOSS ACRYLIC ENAMEL	TBD	NEW/EXIST EXTERIOR FIBERGLASS DOORS
PT-4	PAINT	SEE SPECIFICATIONS	EXTERIOR SEMI-GLOSS ACRYLIC ENAMEL	TBD	EXTERIOR PAINTED WOOD
PT-5	PAINT	SEE SPECIFICATIONS	EXTERIOR SEMI-GLOSS ACRYLIC ENAMEL	TBD	DOWNSPOUTS - PREP AS REQUIRED
PT-6	HIGH PERFORMANCE COATING	SEE SPECIFICATIONS	SEE SPECIFICATIONS	TBD	EXTERIOR METAL RAILINGS
P.LAM					
PL-1	PLASTIC LAMINATE	TBD - SEE SPECS.	HIGH PRESSURE DECORATIVE LAMINATE	TBD	UNIT COUNTERTOPS & INTEGRAL BACKSPLASH
PL-2	PLASTIC LAMINATE	TBD - SEE SPECS.	HIGH PRESSURE DECORATIVE LAMINATE	TBD	BACKSPLASH BEHIND STOVE

1 FINISH LEGEND
SCALE: NOT TO SCALE

UNITS
(ALL GROUND FLOOR UNITS)

LOCATION	FLOOR	BASE	WALLS		CEILING	CABINETRY	REMARKS
			Wall	Soffit		Counter/bksplsh	
ENTRY	SV-1	B-2	PT-2	PT-2	PT-1	PL-1/PL-2	-
KITCHEN	SV-1	B-2	PT-2	PT-2	PT-1	PL-1/PL-2	-
LIVING/DINING	CPT-1	B-1	PT-2	PT-1	PT-1	N/A	-
BEDROOM/BEDROOM CLOSET	CPT-1	B-1	PT-2	N/A	PT-1	N/A	-
BATHROOM	SV-1	B-2	PT-2	PT-1	PT-1	PL-1	-
HALL	CPT-1	B-1	PT-2	N/A	PT-1	N/A	

2 ROOM FINISH SCHEDULE
SCALE: NOT TO SCALE

GENERAL INTERIOR FINISH NOTES

A. COORDINATE EXTENT OF FINISH MATERIALS, COLORS, AND TEXTURES WITH ENLARGED UNIT PLANS, INTERIOR ELEVATIONS AND SPECIFICATIONS.

REGISTERED ARCHITECT
BRIAN D. CARLETON
PORTLAND, OREGON
2918
STATE OF OREGON

CARLETON HART ARCHITECTURE
322 nw 8th avenue portland, oregon 97209
t 503 243 2252 | f 503 243 3261 | carletonhart.com

PARKWAY VILLAGE : EAST
APARTMENT REHABILITATION
SALEM HOUSING AUTHORITY

PERMIT REVIEW / BID SET

FINISH SCHEDULES

PROJ NO. 21348

01.21.14

COPYRIGHT - CARLETON HART ARCHITECTURE DO NOT REPRODUCE WITHOUT PERMISSION

A6.61

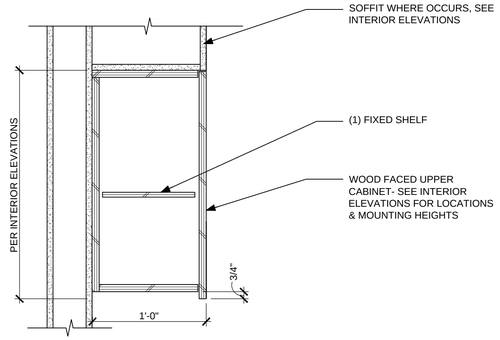

1 KITCHEN CABINETRY - UPPER
SCALE: 1 1/2" = 1'-0"

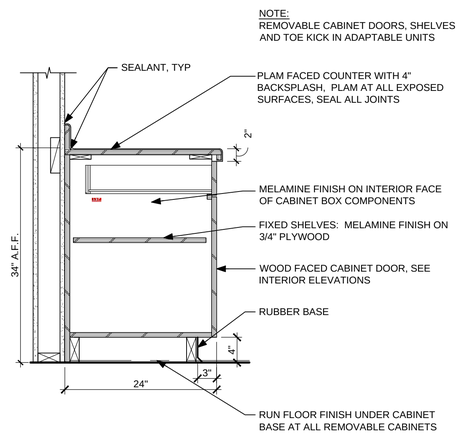

2 KITCHEN CABINET - LOWER
SCALE: 1" = 1'-0"

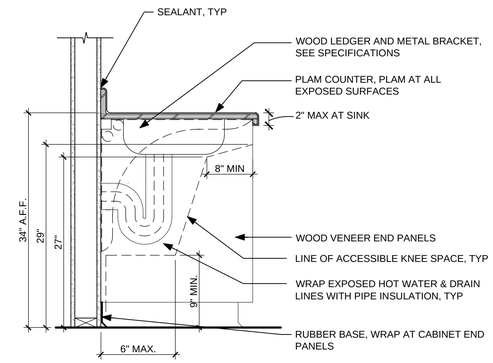

3 COUNTER AT ACCESSIBLE KITCHEN SINK
SCALE: 1" = 1'-0"

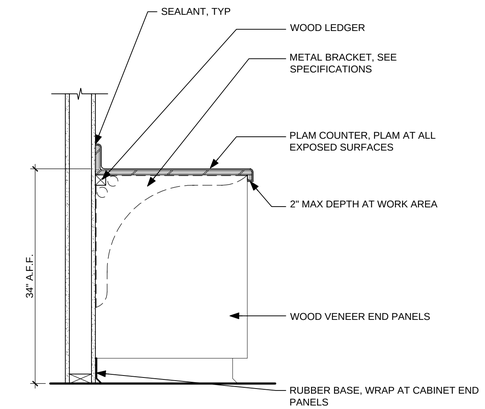

4 COUNTER AT ACCESSIBLE WORK AREA
SCALE: 1" = 1'-0"

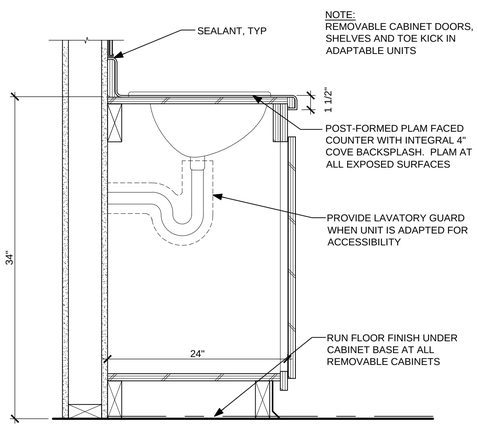

5 BATHROOM VANITY/CABINET
SCALE: 1 1/2" = 1'-0"

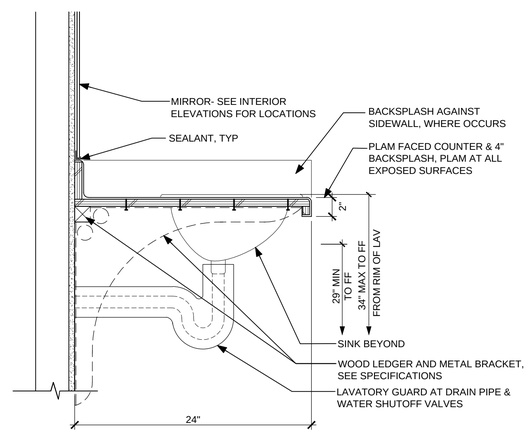

6 COUNTER AT ACCESSIBLE LAVATORY
SCALE: 1 1/2" = 1'-0"

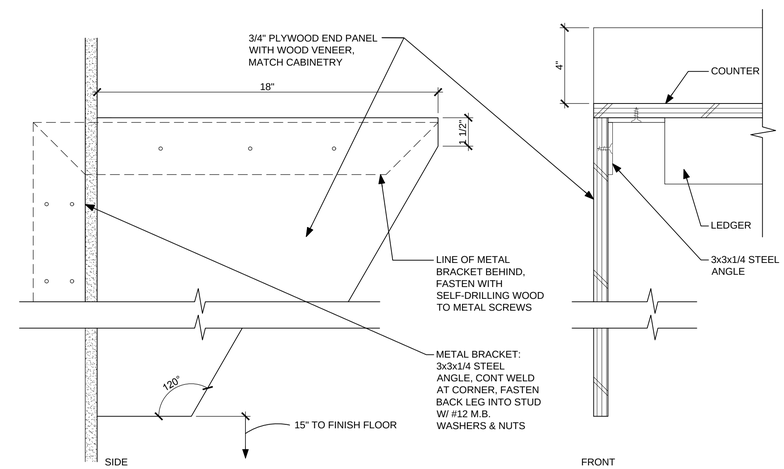

7 COUNTER END PANEL
SCALE: 3" = 1'-0"

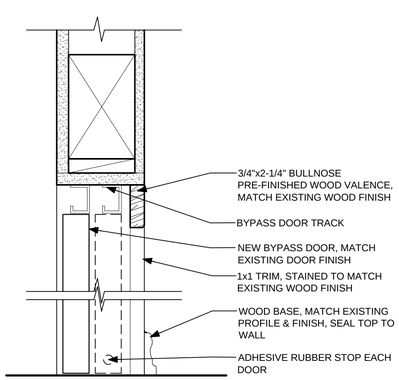

9 BYPASS DOOR HEAD/SILL
SCALE: 3" = 1'-0"

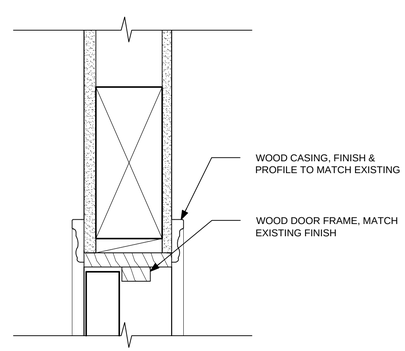

10 DOOR HEAD (JAMB SIM.)
SCALE: 3" = 1'-0"

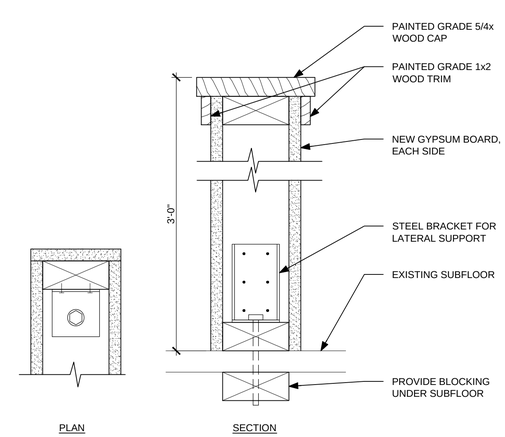

11 WALL CAP AT PARTIAL HEIGHT WALLS
SCALE: 3" = 1'-0"

REGISTERED ARCHITECT
BRIAN D. CARLETON
PORTLAND, OREGON
2918
STATE OF OREGON

CARLETON HART ARCHITECTURE
322 nw 8th avenue portland, oregon 97209
t 503 243 2252 | f 503 243 3261 | carletonhart.com

PARKWAY VILLAGE : EAST
APARTMENT REHABILITATION
SALEM HOUSING AUTHORITY

PERMIT REVIEW / BID SET

INTERIOR DETAILS

PROJ NO.
21348

01.21.14

COPYRIGHT - CARLETON HART ARCHITECTURE DO NOT REPRODUCE WITHOUT PERMISSION

A7.01

GENERAL STRUCTURAL NOTES

DESIGN CRITERIA:
DESIGN WAS BASED ON THE STRENGTH AND DEFLECTION CRITERIA OF THE 2010 OREGON STRUCTURAL SPECIALTY CODE. (BASED ON THE 2009 IBC) IN ADDITION TO THE DEAD LOADS, THE FOLLOWING LOADS WERE USED FOR DESIGN:

FLOOR & DECK LIVE LOAD=40 PSF, STAIR LIVE LOAD=100 PSF, ROOF SNOW LOAD=25 PSF

BASIC WIND SPEED (3-SEC GUST): 95 MPH, WIND EXPOSURE: B
WIND IMPORTANCE FACTOR Iw: 1.0, BUILDING CATEGORY: II

SDS = 0.63
SD1 = 0.389
SEISMIC IMPORTANCE FACTOR Ie: 1.0, SITE CLASS: D

ALLOWABLE SOIL BEARING PRESSURE: 2,000 PSF (PER CARLSON GEOTECHNICAL REPORT DATED 01-03-2014).

EXISTING CONDITIONS:
THE CONTRACTOR SHALL FIELD VERIFY ALL EXISTING CONDITIONS, DIMENSIONS AND ELEVATIONS. THE CONTRACTOR SHALL NOTIFY THE ARCHITECT/ENGINEER OF ANY DISCREPANCIES FROM CONDITIONS SHOWN ON THE DRAWINGS PRIOR TO THE START OF THE WORK.

TEMPORARY CONDITIONS:
THE CONTRACTOR SHALL BE RESPONSIBLE FOR STRUCTURAL STABILITY OF THE NEW AND EXISTING STRUCTURES AND WALLS DURING CONSTRUCTION. THE STRUCTURE SHOWN ON THE DRAWINGS HAS BEEN DESIGNED FOR STABILITY UNDER THE FINAL CONFIGURATION ONLY.

EARTHWORK:
MAINTAIN THE EXCAVATION FREE FROM GROUND WATER FOR THE TIME REQUIRED TO COMPLETE THE WORK IN A PROPER WORKMANLIKE MANNER. REMOVE LOOSE OR DISTURBED SOIL FROM THE BOTTOMS OF EXCAVATION. FOOTINGS SHALL BEAR ON UNDISTURBED NATIVE SOIL.

SUBMITTALS:
SHOP DRAWINGS SHALL BE SUBMITTED TO THE ARCHITECT/ENGINEER PRIOR TO FABRICATION AND CONSTRUCTION REGARDING ALL STRUCTURAL ITEMS, INCLUDING THE FOLLOWING:

A. CONCRETE REINFORCEMENT

CAST-IN-PLACE CONCRETE:
CONCRETE STRENGTH: f'c=3,000 PSI AT 28 DAYS.

REINFORCING STEEL SHALL CONFORM TO ASTM A615, GRADE 60 WITH MIN LAP = 60 BARS DIAMETER.

CONCRETE ACCESSORIES:
EXPANSION ANCHORS SHALL BE STAINLESS STEEL SIMPSON 'STRONG-BOLT 2' PER REPORT ESR-3037

EPOXY ANCHORS SHALL BE INSTALLED WITH SIMPSON 'SET-XP' ADHESIVE PER REPORT ESR-2508.

METALS:
ALL MISCELLANEOUS STEEL: ASTM A36 (FY=36,000 PSI), OR AS NOTED ASTM A572 (FY=50 KSI).
THREADED RODS: ASTM A36 OR ASTM A307 (HDG)
WELDING: PER AWS STANDARDS. E70XX ELECTRODE AND BY CERTIFIED WELDERS.
ALL EXPOSED FASTENERS, ACCESSORIES, AND CONNECTORS SHALL BE ZMAX OR HDG OR STAINLESS STEEL.

CARPENTRY:
SAWN LUMBER DESIGN IS BASED ON THE NATIONAL DESIGN SPECIFICATION, LATEST EDITION. SAWN LUMBER SHALL CONFORM TO WEST-COAST LUMBER INSPECTION BUREAU OR WESTERN WOOD PRODUCTS ASSOCIATION GRADING RULES.

ALL FRAMING LUMBER SHALL HAVE A MAXIMUM MOISTURE CONTENT OF 19% AT THE TIME OF FABRICATION. ALL FRAMING SHALL HAVE A MAXIMUM MOISTURE CONTENT OF 15% BEFORE INSTALLING GYPSUM WALL BOARD. ALL WOOD IN PERMANENT CONTACT WITH CONCRETE / CMU OR EXPOSED TO WEATHER SHALL BE PRESSURE TREATED. GRADE AS FOLLOWS:

FRAMING ELEMENT	SPECIES & GRADE
4x DECK BEAMS, JOISTS, AND LEDGERS	D.F. #2 OR BETTER (PRESSURE TREATED)
6x AND LARGER DECK BEAMS AND POSTS	D.F. #1 OR BETTER (PRESSURE TREATED)
STUDS, JOISTS AND RAFTERS	D.F. #2 OR BETTER

FRAMING ACCESSORIES AND STRUCTURAL FASTENERS SHALL BE MANUFACTURED BY SIMPSON STRONG-TIE COMPANY (OR ENGINEER APPROVED EQUAL) AND OF THE SIZE AND TYPE SHOWN ON THE DRAWINGS AND ATTACHED PER MANUFACTURER'S REQUIREMENTS AND RECOMMENDATIONS UNLESS NOTED OTHERWISE.

ALL FRAMING NAILS SHALL BE COMMON NAILS. NO BOX NAILS ALLOWED. FASTENERS AND ACCESSORIES IN CONTACT WITH PRESERVATIVE TREATED WOOD MUST BE HOT DIPPED GALVANIZED OR HAVE ZMAX COATING. NAIL CALLOUTS SHALL BE INTERPRETED AS FOLLOWS:

NAIL CALLOUT	DIAMETER	LENGTH
8d COMMON	0.131"	2 1/2"
10d COMMON	0.148"	3"
16d SINKER	0.148"	3 1/4"
16d COMMON	0.162"	3 1/2"

SHEATHING PANELS SHALL CONFORM TO THE REQUIREMENTS OF VOLUNTARY PRODUCT STANDARD PS 1 OR PS 2, OR APA PRP-108 PERFORMANCE STANDARDS. UNLESS NOTED, PANELS SHALL BE APA RATED SHEATHING, EXPOSURE 1, OF THE THICKNESS AND SPAN RATING SHOWN ON THE DRAWINGS. SHEATHING INSTALLATION SHALL BE IN CONFORMANCE WITH APA RECOMMENDATIONS. ALLOW 1/8" SPACING AT PANELS ENDS AND EDGES, UNLESS OTHERWISE RECOMMENDED BY THE PANEL MANUFACTURER.

ALL ROOF SHEATHING SHALL BE INSTALLED WITH FACE GRAIN PERPENDICULAR TO SUPPORTS, EXCEPT AS INDICATED ON THE DRAWINGS. NAILING NOT SPECIFICALLY IDENTIFIED ON THE DRAWINGS SHALL CONFORM TO OSSC TABLE 2304.9.1.

FLASHING AND WATERPROOFING:
ALL FLASHING AND WATERPROOFING SHALL BE BY OTHERS.

INSPECTION:
SPECIAL INSPECTIONS: IN ACCORDANCE WITH SECTION 1704 OF THE OREGON STRUCTURAL SPECIALITY CODE AND APPLICABLE SECTIONS OF THE PROJECT SPECIFICATIONS. SPECIAL INSPECTIONS ARE TO BE PERFORMED BY AN INDEPENDENT TESTING LABORATORY EMPLOYED BY THE OWNER PER THE SPECIAL INSPECTION PROGRAM.

SPECIAL INSPECTION PROGRAM
ESTABLISHED PER 2010 IBC SECTION 110 & CHAPTER 17

ITEM	CONTINUOUS	PERIODIC	COMMENTS
GENERAL STRUCTURAL INSPECTIONS AS REQUIRED BY SECTION 109			
FOOTING AND FOUNDATION REINFORCEMENT			BY BUILDING OFFICIAL
SLAB REINFORCEMENT			BY BUILDING OFFICIAL
WOOD FRAMING			BY BUILDING OFFICIAL
FINAL INSPECTION			BY BUILDING OFFICIAL
CONCRETE			
REINFORCING SIZE AND PLACEMENT		X	IBC 1913.4, ACI 318: 3.5, 7.1-7.7
BOLTS TO BE INSTALLED PRIOR TO AND DURING CONCRETE PLACEMENT (FOR ALLOWABLE STRESS INCREASE)	X		IBC 1911.5
VERIFY USE OF REQUIRED DESIGN MIX		X	IBC 1904.2.2, 1913.2-3; ACI 318: CH. 4, 5.2-5.4
PREPERATION OF TEST SPECIMENS	X		ASTM C 172, ASTM C 31, ACI 318: 5.6, 5.8
CONCRETE & SHOTCRETE PLACEMENT	X		IBC 1913.6-8, ACI 318: 5.9, 5.10
MAINTENANCE OF SPECIFIED CURING TEMPERATURES AND TECHNIQUES		X	IBC 1913.9, ACI 318: 5.11-5.13
EPOXY OR ADHESIVE ANCHOR PLACEMENT	X		
EXPANSION OR SCREW ANCHOR PLACEMENT	X		WHERE INDICATED ON DRAWINGS
INSPECT FORMWORK FOR SHAPING LOCATION AND DIMENSIONS OF CONCRETE MEMBER BEING FORMED		X	ACI 318: 6.1.1

DEFINISTIONS:
A. CONTINUOUS INSPECTION MEANS THAT THE SPECIAL INSPECTOR IS ON SITE AT ALL TIMES OBSERVING THE WORK REQUIRING SPECIAL INSPECTION.
B. PERIODIC INSPECTION MEANS THAT THE SPECIAL INSPECTOR IS ON SITE AT TIME INTERVALS NECESSARY TO CONFIRM THAT THE WORK REQUIRING SPECIAL INSPECTION IS IN CONFORMANCE WITH APPROVED PERMIT PLANS AND SPECIFICATIONS.

GRAPHIC LEGEND

X / S	DETAIL REFERENCE
(N)	DENOTES NEW CONSTRUCTION.
(E)	DENOTES EXISTING CONSTRUCTION.
X	DENOTES KEYNOTE
E.O.R.	DENOTES ENGINEER OF RECORD
	REPRESENTS NEW WOOD WALLS ABOVE. (DIRECTLY PLACED OVER THE FLOOR FRAMING SHOWN)
	REPRESENTS EXISTING WOOD WALLS ABOVE. (DIRECTLY PLACED OVER THE FLOOR FRAMING SHOWN)

TMR
T.M. RIPPEY
CONSULTING ENGINEERS
7650 SW Beveland, Suite 100
Tigard, Oregon 97223
Phone: (503) 443-7300
Fax: (503) 443-7330

REGISTERED PROFESSIONAL ENGINEER
44079PE
OREGON
JAN. 12, 1999
DOUGLAS G. GANNETT
EXP: 6/30/15

CARLETON HART ARCHITECTURE
322 nw 8th avenue portland, oregon 97209
t 503 243 2252 | f 503 243 3261 | carletonhart.com

PARKWAY VILLAGE : EAST
APARTMENT REHABILITATION
SALEM HOUSING AUTHORITY

PERMIT REVIEW / BID SET

GENERAL STRUCTURAL NOTES

TMR PROJ NO.
13350

01.21.14

S1.01

COPYRIGHT - CARLETON HART ARCHITECTURE DO NOT REPRODUCE WITHOUT PERMISSION

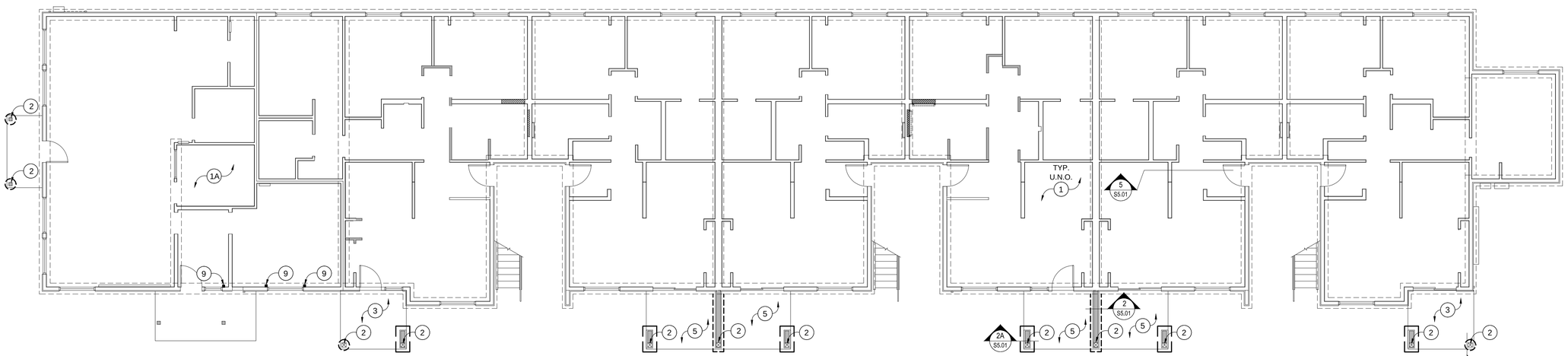

NORTH

1 S2.01 BUILDING 03 - FOUNDATION PLAN

SCALE: 1/8" = 1'-0"

0 2' 4' 8'

FOUNDATION PLAN KEYNOTES:

1. (E) 3/4" PLYWOOD OVER 9 1/2"I-JOISTS @ 2'-0" O/C OVER CRAWLSPACE.

1.A. (E) 2x6 DECKING OVER 4x6 BEAMS @ 6'-0" O/C @ 4x4 POSTS.

2. (N) (1) PIECE P.T. 8x8 POST WITH SIMPSON 'ABU' BASE PER 1/S5.01.

3. (N) 4" CONCRETE SLAB-ON-GRADE WITH 6x6 -10/10 W.W.F. AT CL. REFER TO 1/S3.01 FOR TYPICAL TYPE 'A' DECK FRAMING ABOVE.

4. (N) 4" CONCRETE SLAB-ON-GRADE WITH 6x6 -10/10 W.W.F. AT CL. REFER TO 2/S3.01 FOR TYPICAL TYPE 'A-2' DECK FRAMING ABOVE.

5. (N) 4" CONCRETE SLAB-ON-GRADE WITH 6x6 -10/10 W.W.F. AT CL. REFER TO 3/S3.01 FOR TYPICAL TYPE 'B-1' DECK FRAMING ABOVE.

6. (N) 4" CONCRETE SLAB-ON-GRADE WITH 6x6 -10/10 W.W.F. AT CL. REFER TO 1/S3.02 FOR TYPICAL TYPE 'C-1' DECK FRAMING ABOVE.

7. (N) 4" CONCRETE SLAB-ON-GRADE WITH 6x6 -10/10 W.W.F. AT CL. REFER TO 2/S3.02 FOR TYPICAL TYPE 'C-2' DECK FRAMING ABOVE.

8. (N) 4" CONCRETE SLAB-ON-GRADE WITH 6x6 -10/10 W.W.F. AT CL. REFER TO 3/S3.02 FOR TYPICAL TYPE 'D-1' DECK FRAMING ABOVE.

9. REPLACE (E) WATER DAMAGED 4x4 CRAWLSPACE POST PER DETAIL 3/S5.01.

10. REPAIR (E) WATER DAMAGED 2x6 STUD CRIPPLE WALL PER DETAIL 4/S5.01 FOR FULL LENGTH.

NOTES:

- VERIFY ALL CONDITIONS WITH ARCHITECTURAL DWGS. DIMENSIONS NOT SHOWN ARE PER APPROVED ARCH'L DWGS. RESOLVE ANY DISCREPANCIES WITH THE ARCHITECT PRIOR TO BIDDING OR CONSTRUCTION.

TMR
T.M. RIPPEY
CONSULTING ENGINEERS
7650 SW Beveland, Suite 100
Tigard, Oregon 97223
Phone: (503) 443-3700
Fax: (503) 443-3700

REGISTERED PROFESSIONAL ENGINEER
44079PE
OREGON
JAN. 12, 1993
DOUGLAS G. GANNETT
EXP: 6/30/15

CARLETON HART ARCHITECTURE
322 nw 8th avenue portland, oregon 97209
t 503 243 2252 | f 503 243 3261 | carletonhart.com

PARKWAY VILLAGE : EAST
APARTMENT REHABILITATION
SALEM HOUSING AUTHORITY

PERMIT REVIEW / BID SET

BUILDING 03
FIRST FLOOR PLAN

TMR PROJ NO.
13350

01.21.14

COPYRIGHT - CARLETON HART ARCHITECTURE DO NOT REPRODUCE WITHOUT PERMISSION

S2.01

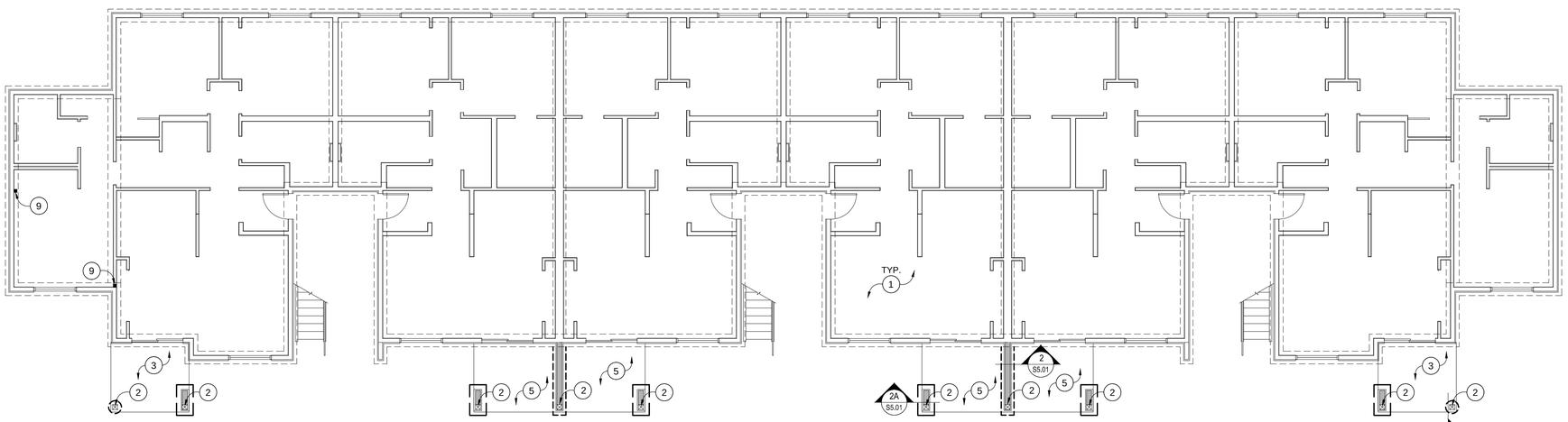

NORTH

1
S2.02

BUILDING 04 - FOUNDATION PLAN

SCALE: 1/8" = 1'-0"

0 2' 4' 8'

FOUNDATION PLAN KEYNOTES:

1. (E) 3/4" PLYWOOD OVER 9 1/2"I-JOISTS @ 2'-0" O/C OVER CRAWLSPACE.
2. (N) (1) PIECE P.T. 8x8 POST WITH SIMPSON 'ABU' BASE PER 1/S5.01.
3. (N) 4" CONCRETE SLAB-ON-GRADE WITH 6x6 -10/10 W.W.F. AT CL. REFER TO 1/S3.01 FOR TYPICAL TYPE 'A' DECK FRAMING ABOVE.
4. (N) 4" CONCRETE SLAB-ON-GRADE WITH 6x6 -10/10 W.W.F. AT CL. REFER TO 2/S3.01 FOR TYPICAL TYPE 'A-2' DECK FRAMING ABOVE.
5. (N) 4" CONCRETE SLAB-ON-GRADE WITH 6x6 -10/10 W.W.F. AT CL. REFER TO 3/S3.01 FOR TYPICAL TYPE 'B-1' DECK FRAMING ABOVE.
6. (N) 4" CONCRETE SLAB-ON-GRADE WITH 6x6 -10/10 W.W.F. AT CL. REFER TO 1/S3.02 FOR TYPICAL TYPE 'C-1' DECK FRAMING ABOVE.
7. (N) 4" CONCRETE SLAB-ON-GRADE WITH 6x6 -10/10 W.W.F. AT CL. REFER TO 2/S3.02 FOR TYPICAL TYPE 'C-2' DECK FRAMING ABOVE.
8. (N) 4" CONCRETE SLAB-ON-GRADE WITH 6x6 -10/10 W.W.F. AT CL. REFER TO 3/S3.02 FOR TYPICAL TYPE 'D-1' DECK FRAMING ABOVE.
9. REPLACE (E) WATER DAMAGED 4x4 CRAWLSPACE POST PER DETAIL 3/S5.01.
10. REPAIR (E) WATER DAMAGED 2x6 STUD CRIPPLE WALL PER DETAIL 4/S5.01 FOR FULL LENGTH.

NOTES:

- VERIFY ALL CONDITIONS WITH ARCHITECTURAL DWGS. DIMENSIONS NOT SHOWN ARE PER APPROVED ARCH'L DWGS. RESOLVE ANY DISCREPANCIES WITH THE ARCHITECT PRIOR TO BIDDING OR CONSTRUCTION.

TMR
T.M. RIPPEY
CONSULTING ENGINEERS
7650 SW Beveland, Suite 100
Tigard, Oregon 97223
Phone: (503) 443-3700
Fax: (503) 443-3700

REGISTERED PROFESSIONAL ENGINEER
44079PE
OREGON
JAN. 12, 1993
DOUGLAS G. GANNETT
EXP: 6/30/15

CARLETON HART ARCHITECTURE
322 nw 8th avenue portland, oregon 97209
t 503 243 2252 | f 503 243 3261 | carletonhart.com

PARKWAY VILLAGE : EAST
APARTMENT REHABILITATION
SALEM HOUSING AUTHORITY

PERMIT REVIEW / BID SET

BUILDING 04
FIRST FLOOR PLAN

TMR PROJ NO.
13350

01.21.14

COPYRIGHT - CARLETON HART ARCHITECTURE DO NOT REPRODUCE WITHOUT PERMISSION

S2.02

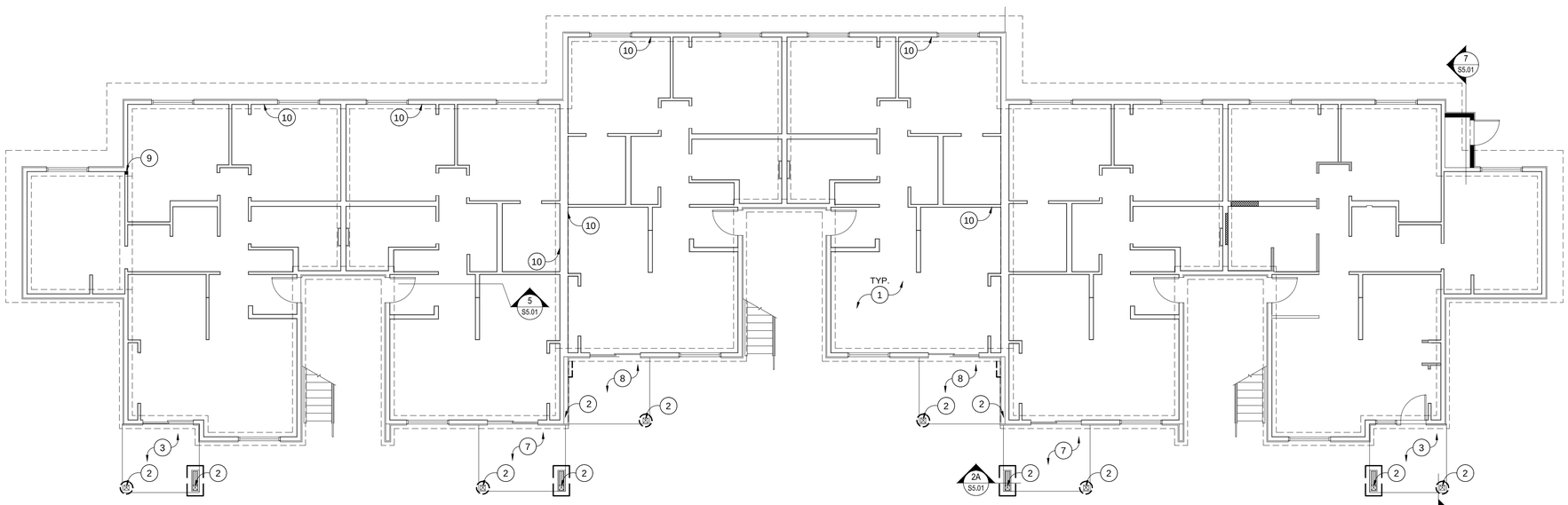

NORTH

1
S2.03

BUILDING 05 - FOUNDATION PLAN

SCALE: 1/8" = 1'-0"

0 2' 4' 8'

FOUNDATION PLAN KEYNOTES:

1. (E) 3/4" PLYWOOD OVER 9 1/2"I-JOISTS @ 2'-0" O/C OVER CRAWLSPACE.
2. (N) (1) PIECE P.T. 8x8 POST WITH SIMPSON 'ABU' BASE PER 1/S5.01.
3. (N) 4" CONCRETE SLAB-ON-GRADE WITH 6x6 -10/10 W.W.F. AT CL. REFER TO 1/S3.01 FOR TYPICAL TYPE 'A' DECK FRAMING ABOVE.
4. (N) 4" CONCRETE SLAB-ON-GRADE WITH 6x6 -10/10 W.W.F. AT CL. REFER TO 2/S3.01 FOR TYPICAL TYPE 'A-2' DECK FRAMING ABOVE.
5. (N) 4" CONCRETE SLAB-ON-GRADE WITH 6x6 -10/10 W.W.F. AT CL. REFER TO 3/S3.01 FOR TYPICAL TYPE 'B-1' DECK FRAMING ABOVE.
6. (N) 4" CONCRETE SLAB-ON-GRADE WITH 6x6 -10/10 W.W.F. AT CL. REFER TO 1/S3.02 FOR TYPICAL TYPE 'C-1' DECK FRAMING ABOVE.
7. (N) 4" CONCRETE SLAB-ON-GRADE WITH 6x6 -10/10 W.W.F. AT CL. REFER TO 2/S3.02 FOR TYPICAL TYPE 'C-2' DECK FRAMING ABOVE.
8. (N) 4" CONCRETE SLAB-ON-GRADE WITH 6x6 -10/10 W.W.F. AT CL. REFER TO 3/S3.02 FOR TYPICAL TYPE 'D-1' DECK FRAMING ABOVE.
9. REPLACE (E) WATER DAMAGED 4x4 CRAWLSPACE POST PER DETAIL 3/S5.01.
10. REPAIR (E) WATER DAMAGED 2x6 STUD CRIPPLE WALL PER DETAIL 4/S5.01 FOR FULL LENGTH.

NOTES:

- VERIFY ALL CONDITIONS WITH ARCHITECTURAL DWGS. DIMENSIONS NOT SHOWN ARE PER APPROVED ARCH'L DWGS. RESOLVE ANY DISCREPANCIES WITH THE ARCHITECT PRIOR TO BIDDING OR CONSTRUCTION.

TMR
T.M. RIPPEY
CONSULTING ENGINEERS
7650 SW Beveland, Suite 100
Tigard, Oregon 97223
Phone: (503) 443-3700
Fax: (503) 443-3700

REGISTERED PROFESSIONAL ENGINEER
44079PE
OREGON
JAN. 12, 1999
DOUGLAS G. GANNETT
EXP: 6/30/15

CARLETON HART ARCHITECTURE
322 nw 8th avenue portland, oregon 97209
t 503 243 2252 | f 503 243 3261 | carletonhart.com

PARKWAY VILLAGE : EAST
APARTMENT REHABILITATION
SALEM HOUSING AUTHORITY

PERMIT REVIEW / BID SET

BUILDING 05
FIRST FLOOR PLAN

TMR PROJ NO.
13350

01.21.14

S2.03

COPYRIGHT - CARLETON HART ARCHITECTURE DO NOT REPRODUCE WITHOUT PERMISSION

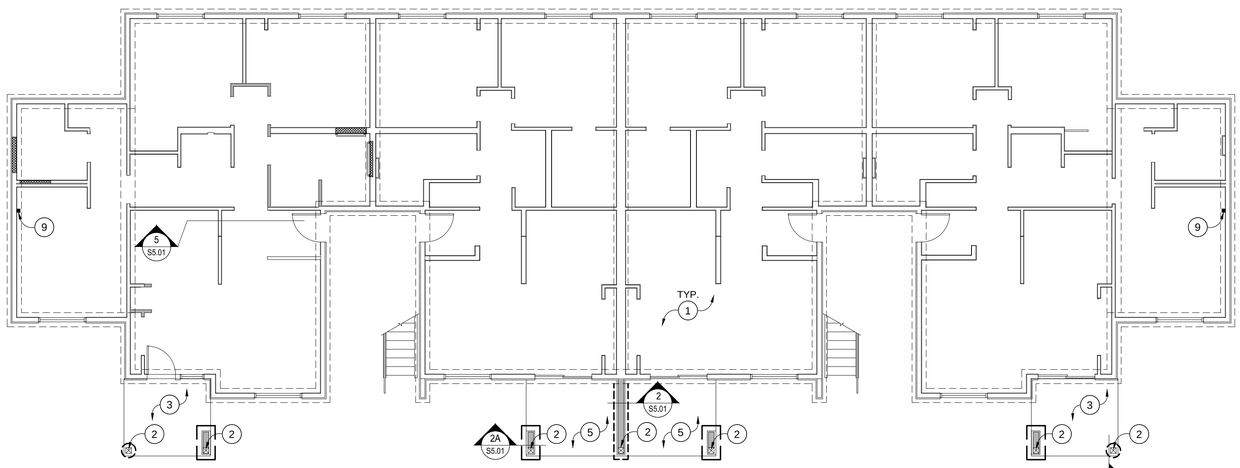

NORTH

1
S2.04

BUILDING 06 - FOUNDATION PLAN

SCALE: 1/8" = 1'-0"

0 2' 4' 8'

FOUNDATION PLAN KEYNOTES:

1. (E) 3/4" PLYWOOD OVER 9 1/2"I-JOISTS @ 2'-0" O/C OVER CRAWLSPACE.
2. (N) (1) PIECE P.T. 8x8 POST WITH SIMPSON 'ABU' BASE PER 1/S5.01.
3. (N) 4" CONCRETE SLAB-ON-GRADE WITH 6x6 -10/10 W.W.F. AT CL. REFER TO 1/S3.01 FOR TYPICAL TYPE 'A' DECK FRAMING ABOVE.
4. (N) 4" CONCRETE SLAB-ON-GRADE WITH 6x6 -10/10 W.W.F. AT CL. REFER TO 2/S3.01 FOR TYPICAL TYPE 'A-2' DECK FRAMING ABOVE.
5. (N) 4" CONCRETE SLAB-ON-GRADE WITH 6x6 -10/10 W.W.F. AT CL. REFER TO 3/S3.01 FOR TYPICAL TYPE 'B-1' DECK FRAMING ABOVE.
6. (N) 4" CONCRETE SLAB-ON-GRADE WITH 6x6 -10/10 W.W.F. AT CL. REFER TO 1/S3.02 FOR TYPICAL TYPE 'C-1' DECK FRAMING ABOVE.
7. (N) 4" CONCRETE SLAB-ON-GRADE WITH 6x6 -10/10 W.W.F. AT CL. REFER TO 2/S3.02 FOR TYPICAL TYPE 'C-2' DECK FRAMING ABOVE.
8. (N) 4" CONCRETE SLAB-ON-GRADE WITH 6x6 -10/10 W.W.F. AT CL. REFER TO 3/S3.02 FOR TYPICAL TYPE 'D-1' DECK FRAMING ABOVE.
9. REPLACE (E) WATER DAMAGED 4x4 CRAWLSPACE POST PER DETAIL 3/S5.01.
10. REPAIR (E) WATER DAMAGED 2x6 STUD CRIPPLE WALL PER DETAIL 4/S5.01 FOR FULL LENGTH.

NOTES:

- VERIFY ALL CONDITIONS WITH ARCHITECTURAL DWGS. DIMENSIONS NOT SHOWN ARE PER APPROVED ARCH'L DWGS. RESOLVE ANY DISCREPANCIES WITH THE ARCHITECT PRIOR TO BIDDING OR CONSTRUCTION.

TMR
T.M. RIPPEY
CONSULTING ENGINEERS
7650 SW Beveland, Suite 100
Tigard, Oregon 97223
Phone: (503) 443-3700
Fax: (503) 443-3700

REGISTERED PROFESSIONAL ENGINEER
44079PE
OREGON
JAN. 12, 1993
DOUGLAS G. GANNETT
EXP: 6/30/15

CARLETON HART ARCHITECTURE
322 nw 8th avenue portland, oregon 97209
t 503 243 2252 | f 503 243 3261 | carletonhart.com

PARKWAY VILLAGE : EAST
APARTMENT REHABILITATION
SALEM HOUSING AUTHORITY

PERMIT REVIEW / BID SET

BUILDING 06
FIRST FLOOR PLAN

TMR PROJ NO.
13350

01.21.14

COPYRIGHT - CARLETON HART ARCHITECTURE DO NOT REPRODUCE WITHOUT PERMISSION

S2.04

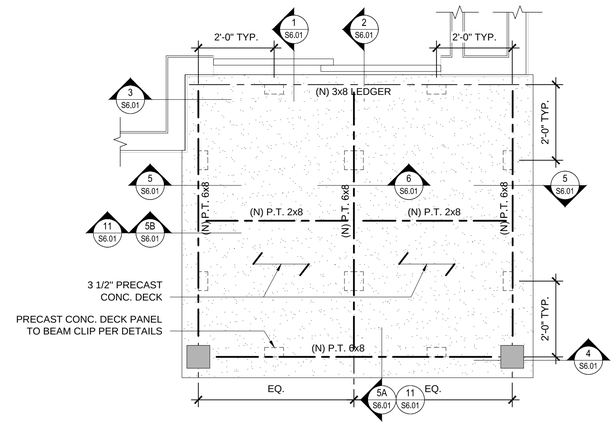

3RD FLOOR DECK FRAMING PLAN

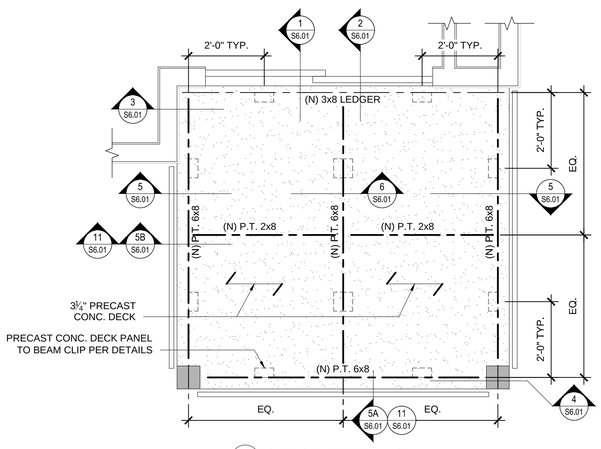

2ND FLOOR DECK FRAMING PLAN

1 S3.01 TYPE 'A-1' DECK FRAMING PLAN

13350-06

SCALE: 1/2" = 1'-0"

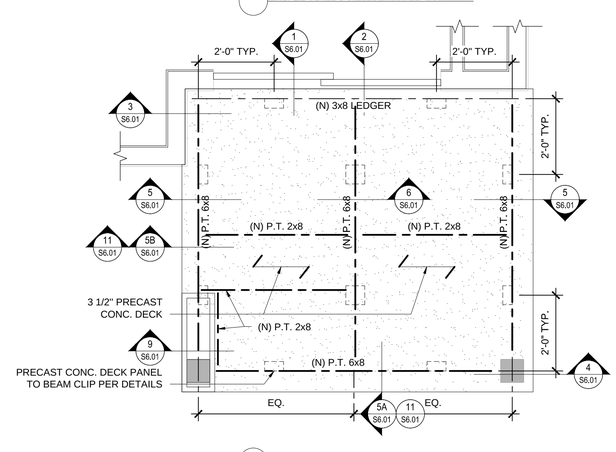

2ND FLOOR DECK FRAMING PLAN

2 S3.01 TYPE 'A-2' DECK FRAMING PLAN

13350-02

SCALE: 1/2" = 1'-0"

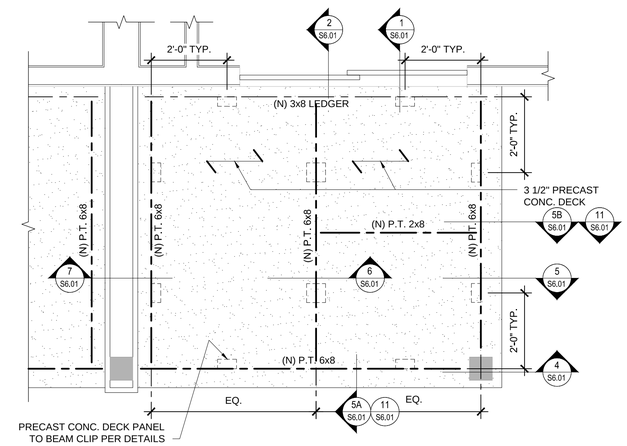

3 S3.01 TYPE 'B-1' DECK FRAMING PLAN

13350-03

SCALE: 1/2" = 1'-0"

TMR
T.M. RIPPEY
CONSULTING ENGINEERS
7650 SW Beveland, Suite 100
Tigard, Oregon 97223
Phone: (503) 443-5300
Fax: (503) 443-5700

REGISTERED PROFESSIONAL ENGINEER
44079PE
OREGON
JAN. 12, 1999
DOUGLAS G. GANNETT
EXP: 6/30/15

CARLETON HART ARCHITECTURE
322 nw 8th avenue portland, oregon 97209
t 503 243 2252 | f 503 243 3261 | carletonhart.com

PARKWAY VILLAGE : EAST
APARTMENT REHABILITATION
SALEM HOUSING AUTHORITY

PERMIT REVIEW / BID SET

DECK FRAMING PLANS

TMR PROJ NO.
13350

01.21.14

S3.01

COPYRIGHT - CARLETON HART ARCHITECTURE DO NOT REPRODUCE WITHOUT PERMISSION

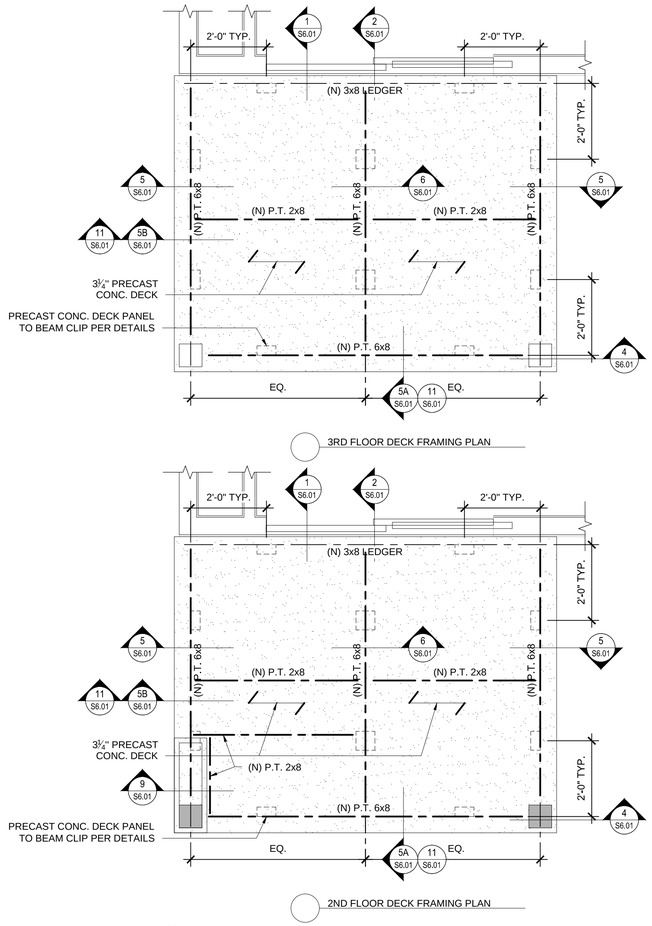

1 S3.02 TYPE 'C-1' DECK FRAMING PLAN

13350-04

SCALE: 1/2" = 1'-0"

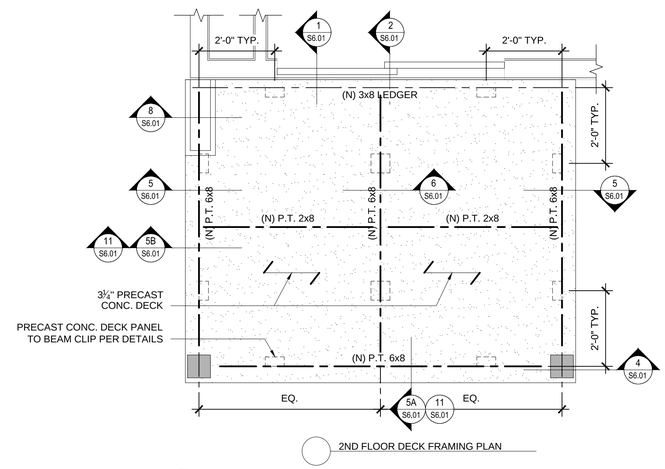

2 S3.02 TYPE 'C-2' DECK FRAMING PLAN

13350-09

SCALE: 1/2" = 1'-0"

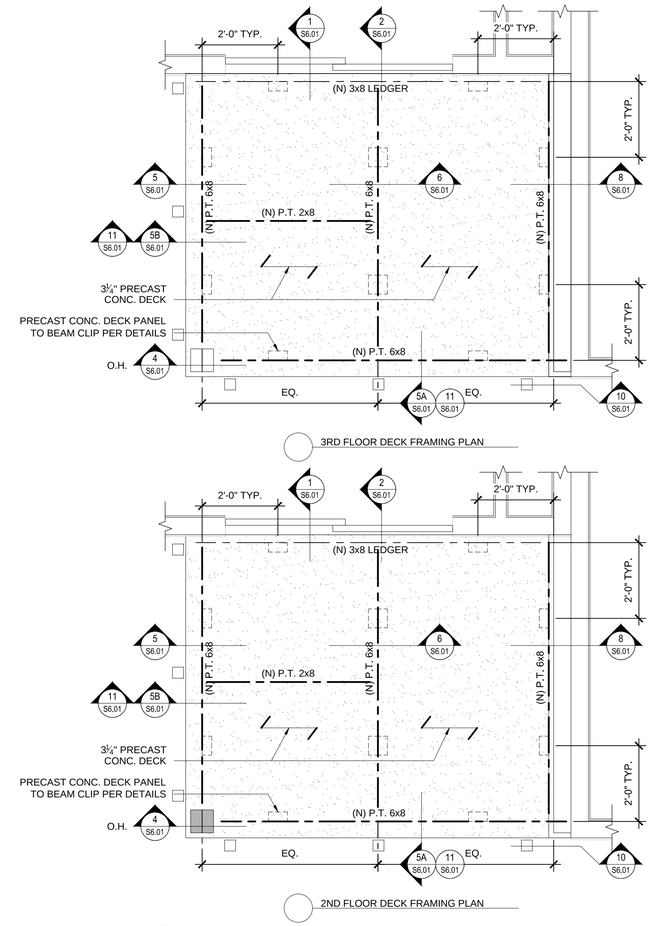

3 S3.02 TYPE 'D-1' DECK FRAMING PLAN

13350-05

SCALE: 1/2" = 1'-0"

TMR
T.M. RIPPEY
CONSULTING ENGINEERS
7650 SW Beveland, Suite 100
Tigard, Oregon 97223
Phone: (503) 443-3700
Fax: (503) 443-3700

REGISTERED PROFESSIONAL ENGINEER
44079PE
OREGON
JAN. 12, 1993
DOUGLAS G. GANNETT
EXP: 6/30/15

CARLETON HART ARCHITECTURE
322 nw 8th avenue portland, oregon 97209
t 503 243 2252 | f 503 243 3261 | carletonhart.com

PARKWAY VILLAGE : EAST
APARTMENT REHABILITATION
SALEM HOUSING AUTHORITY

PERMIT REVIEW / BID SET

DECK FRAMING PLANS

TMR PROJ NO.
13350

01.21.14

COPYRIGHT - CARLETON HART ARCHITECTURE DO NOT REPRODUCE WITHOUT PERMISSION

S3.02

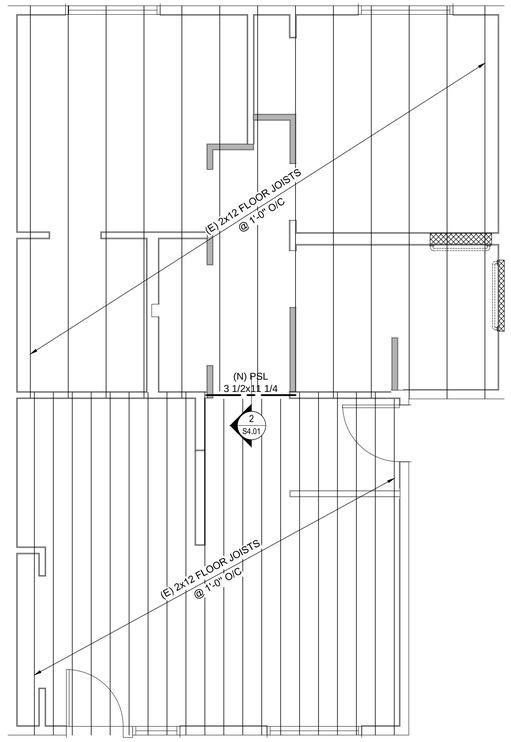

1 / S4.01 BUILDING 01 - SECOND FLOOR FRAMING PLAN

SCALE: 1/4" = 1'-0"

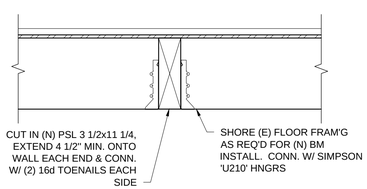

4 / S4.01 TYP. (E) FLOOR JOIST TO (N) BM

13350-17

SCALE: 1" = 1'-0"

TMR
T.M. RIPPEY
CONSULTING ENGINEERS
7650 SW Beveland, Suite 100
Tigard, Oregon 97223
Phone: (503) 443-3700
Fax: (503) 443-3700

REGISTERED PROFESSIONAL ENGINEER
44079PE
OREGON
JAN. 12, 1993
DOUGLAS G. GANNETT
EXP: 6/30/15

CARLETON HART ARCHITECTURE
322 nw 8th avenue portland, oregon 97209
t 503 243 2252 | f 503 243 3261 | carletonhart.com

PARKWAY VILLAGE : EAST
APARTMENT REHABILITATION
SALEM HOUSING AUTHORITY

PERMIT REVIEW / BID SET

UNIT 2 TYPE 'A'
FRAMING PLAN AND
DETAILS

TMR PROJ NO.
13350

01.21.14

S4.01

COPYRIGHT - CARLETON HART ARCHITECTURE DO NOT REPRODUCE WITHOUT PERMISSION

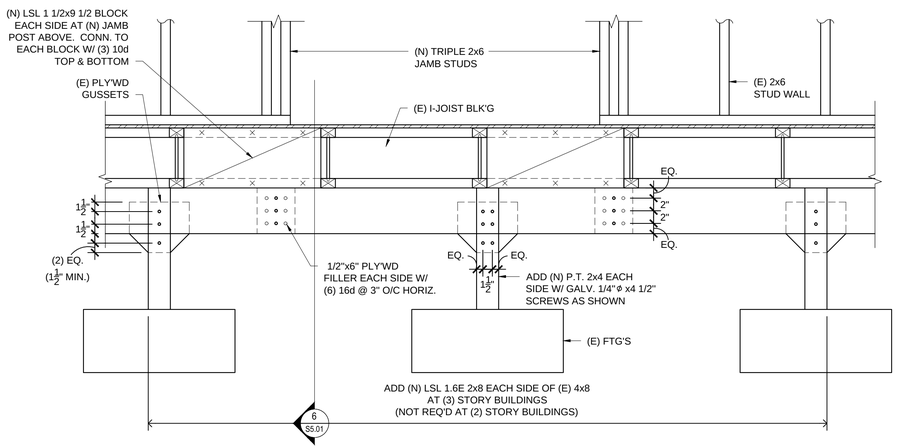

5 S5.01 TYP. CRAWLSPACE BM UPGRADE AT WIDENED HALL OPENING

13350-20

SCALE: 1" = 1'-0"

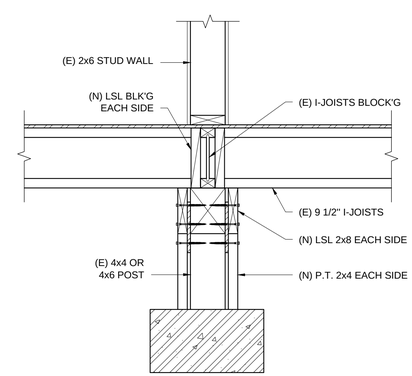

6 S5.01 (E) CRAWLSPACE BM UPGRADE

13350-21

SCALE: 1" = 1'-0"

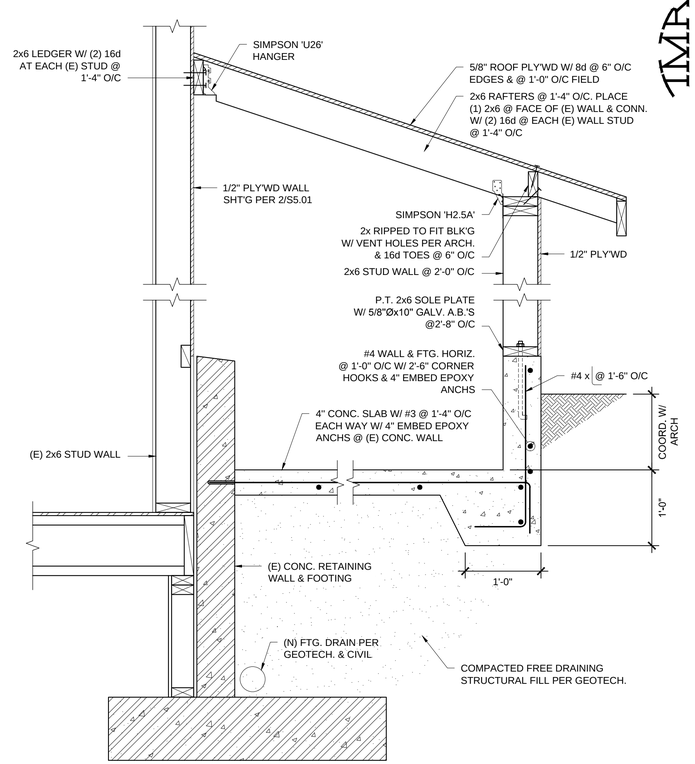

7 S5.01 TYP. (N) FIRE RISER ROOM FRAMING

13350-26

SCALE: 1" = 1'-0"

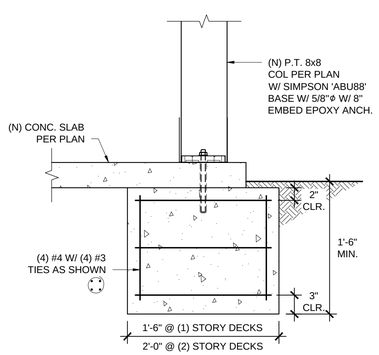

1 S5.01 DECK FOUNDATION SECTION

13350-07

SCALE: 1" = 1'-0"

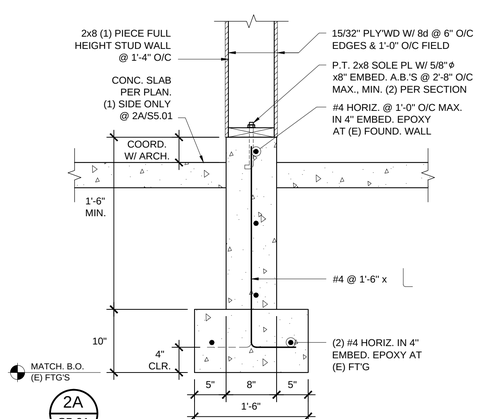

2A S5.01

2 S5.01 TYP. SCREEN WALL FOUND.

13350-10

SCALE: 1" = 1'-0"

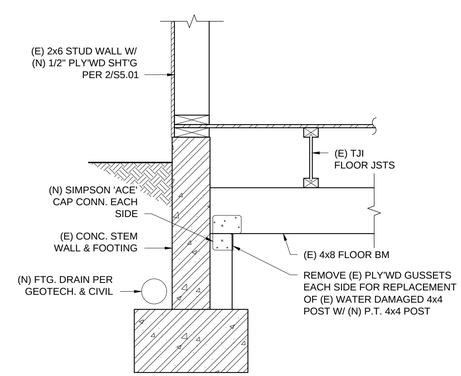

3 S5.01 TYP. WATER DAMAGED 4x4 CRAWLSPACE POST REPLACEMENT

13350-16

SCALE: 1" = 1'-0"

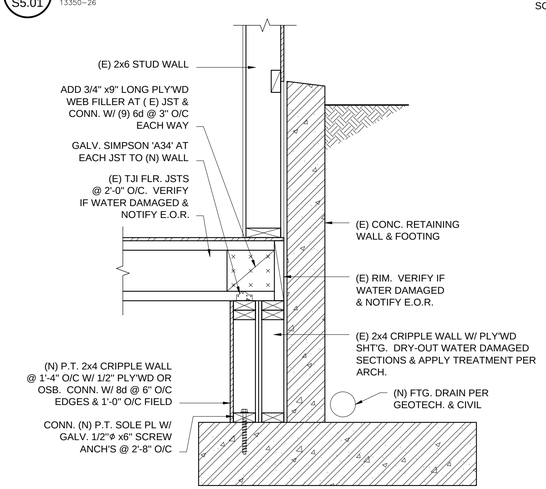

4 S5.01 TYP. WATER DAMAGED CRAWLSPACE CRIPPLE WALL REPAIR

13350-19

SCALE: 1" = 1'-0"

TMR
T.M. RIPPEY
CONSULTING ENGINEERS
7650 SW Beveland, Suite 100
Tigard, Oregon 97223
Phone: (503) 443-3700
Fax: (503) 443-3700

REGISTERED PROFESSIONAL ENGINEER
44079PE
OREGON
JAN. 12, 1993
DOUGLAS G. GANNETT
EXP: 6/30/15

CARLETON HART ARCHITECTURE
322 nw 8th avenue portland, oregon 97209
t 503 243 2252 | f 503 243 3261 | carletonhart.com

PARKWAY VILLAGE : EAST
APARTMENT REHABILITATION
SALEM HOUSING AUTHORITY

PERMIT REVIEW / BID SET

FOUNDATION AND CRAWLSPACE DETAILS

TMR PROJ NO. 13350

01.21.14

S5.01

COPYRIGHT - CARLETON HART ARCHITECTURE DO NOT REPRODUCE WITHOUT PERMISSION

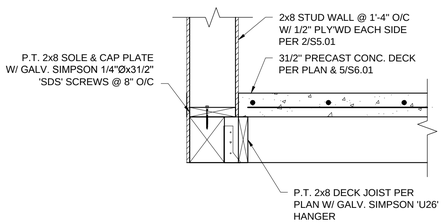

9 S6.01 TYP. FIN. WALL TO DECK EDGE BEAM

13350-24

SCALE: 1" = 1'-0"

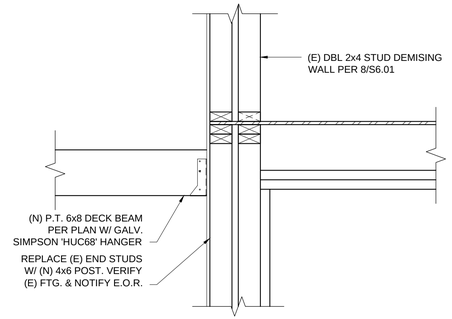

10 S6.01 TYP. 'D-1' DECK BEAM TO (E) CORNER CONN.

13350-23

SCALE: 1" = 1'-0"

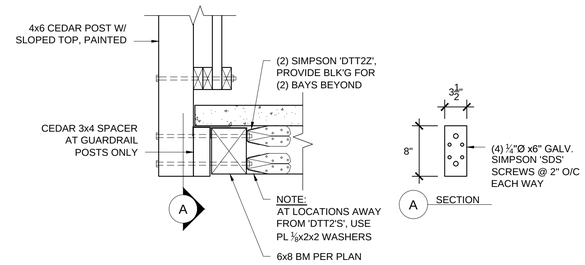

11 S6.01 TYP. GUARDRAIL POST CONN.

13350-27

SCALE: 1" = 1'-0"

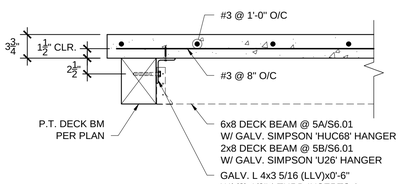

5B S6.01

5A S6.01

5 S6.01 TYP. PRECAST DECK PANEL TO EDGE BM

13350-14

SCALE: 1" = 1'-0"

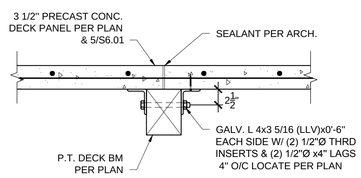

6 S6.01 TYP. PRECAST DECK PANEL TO MID BM

13350-18

SCALE: 1" = 1'-0"

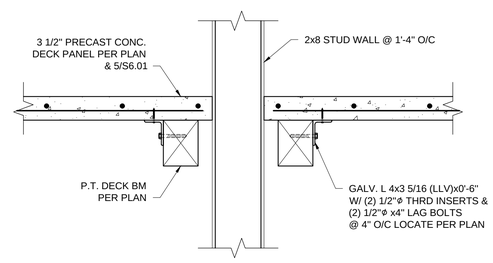

7 S6.01 TYP. DECK PANEL @ SCREEN WALL

13350-22

SCALE: 1" = 1'-0"

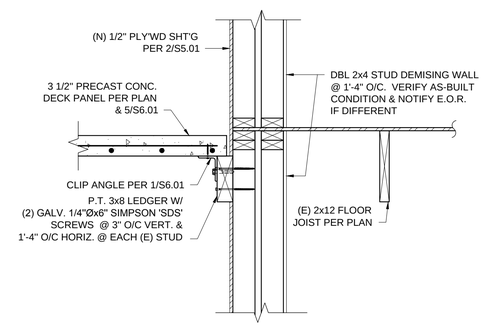

8 S6.01 TYP. 'D-1' DECK BEAM TO (E) CORNER CONN.

13350-25

SCALE: 1" = 1'-0"

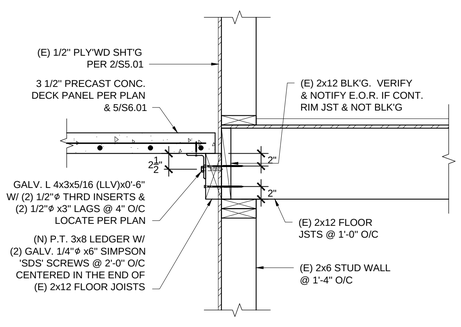

1 S6.01 TYP. CONC. DECK PANEL TO WALL

13350-11

SCALE: 1" = 1'-0"

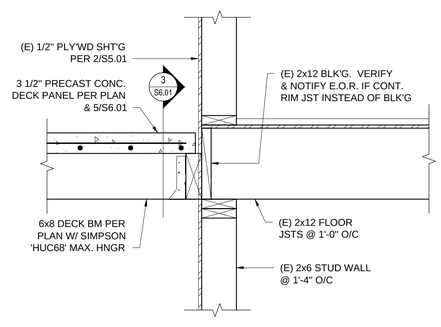

2 S6.01 TYP. DECK BM TO WALL CONN.

13350-12

SCALE: 1" = 1'-0"

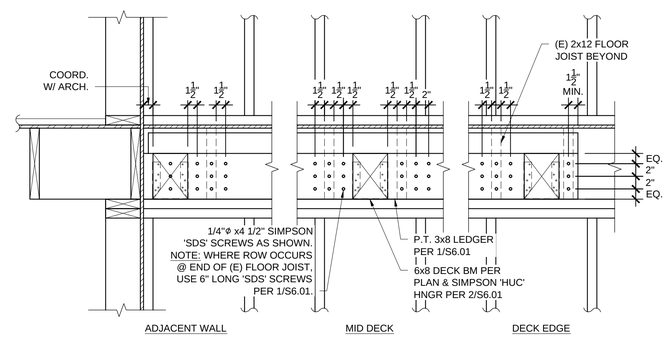

3 S6.01 TYP. DECK BM TO LEDGER FRAMING ELEV.

13350-12

SCALE: 1" = 1'-0"

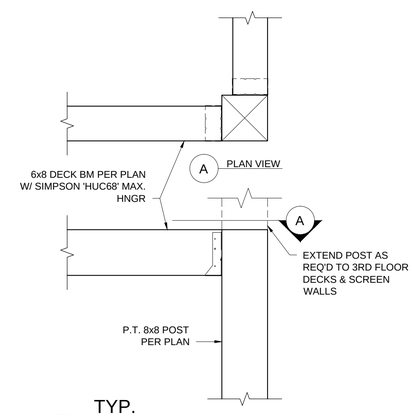

4 S6.01 TYP. DECK BM TO POST CONN.

13350-15

SCALE: 1" = 1'-0"

TMR
T.M. RIPPEY
CONSULTING ENGINEERS
7650 SW Beveland, Suite 100
Tigard, Oregon 97223
Phone: (503) 443-3700
Fax: (503) 443-3700

REGISTERED PROFESSIONAL ENGINEER
44079PE
OREGON
JAN. 12, 1993
DOUGLAS G. GANNETT

EXP: 6/30/15

CARLETON HART ARCHITECTURE
322 nw 8th avenue portland, oregon 97209
t 503 243 2252 | f 503 243 3261 | carletonhart.com

PARKWAY VILLAGE : EAST
APARTMENT REHABILITATION
SALEM HOUSING AUTHORITY

PERMIT REVIEW / BID SET

DECK, FLOOR & ROOF
FRAMING DETAILS

TMR PROJ NO.
13350

01.21.14

S6.01

COPYRIGHT - CARLETON HART ARCHITECTURE DO NOT REPRODUCE WITHOUT PERMISSION