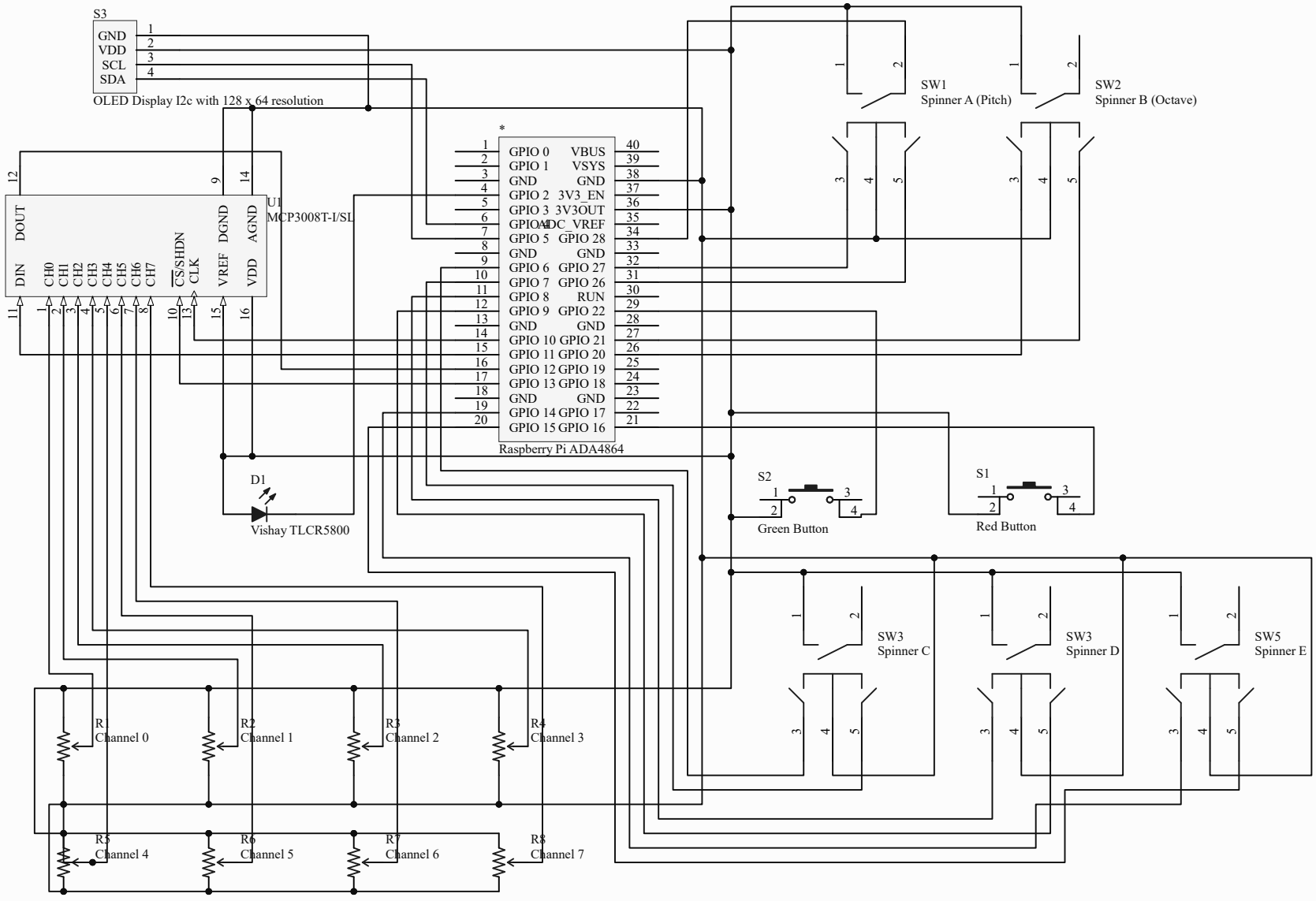

Title	Midi Controller	
Size: Letter	Number	Revision: V1
Date: 2-20-2023		Sheet of
File: MainBoard.SchDoc		Drawn By: Jason Rowe