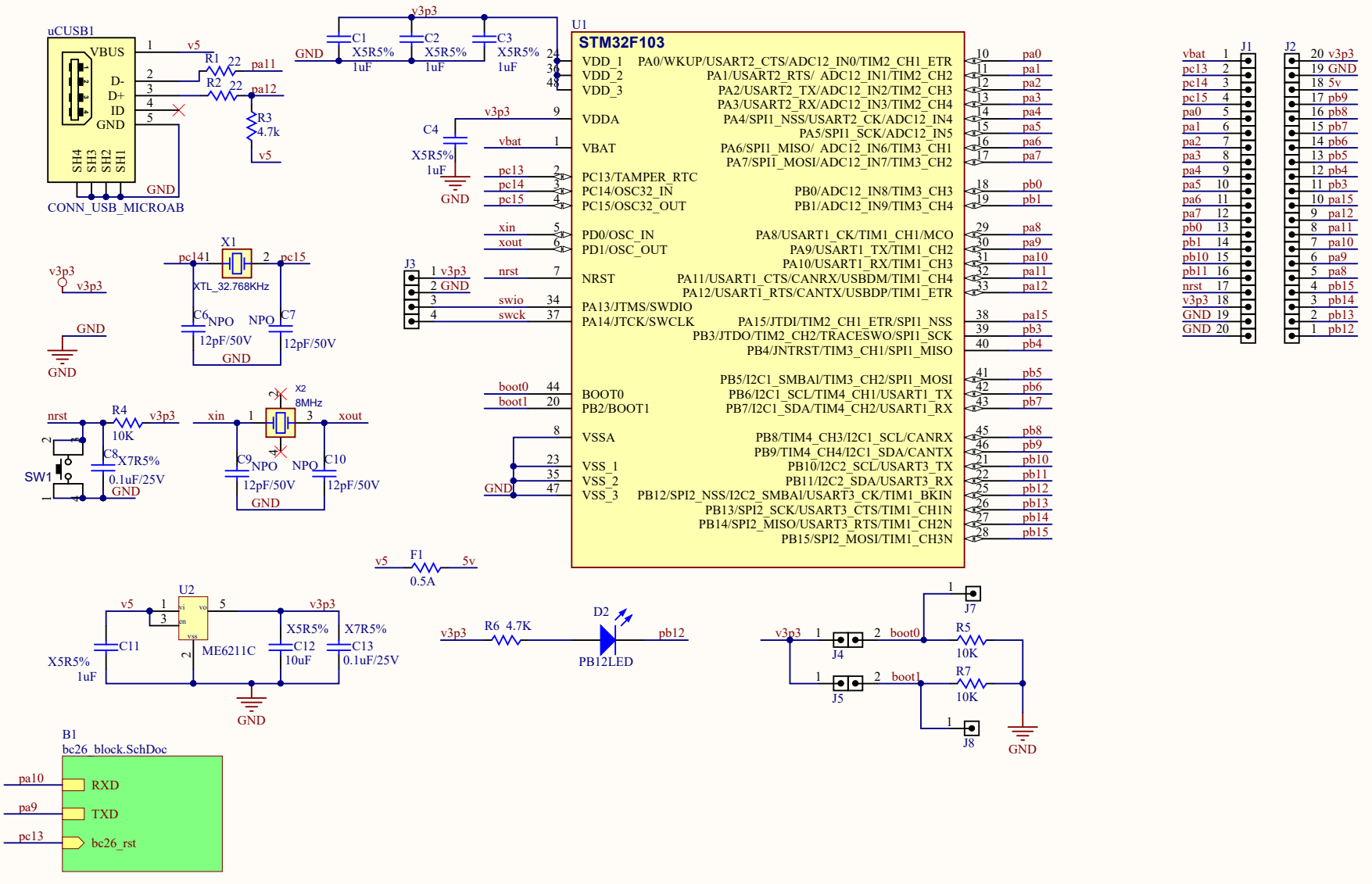

Date: 2020/12/22	Size: A4
File: dsi2598p.SchDoc	