E29 Group 6 Final Report

Jason Khatkar, Roshni Arun, Kilian Cox, and Elijah Priwer

Video Link:

https://youtu.be/y9c9ROYRFO4

Material and process selection table:

Component (or component group) #	Component name	Material candidate	Process candidate (must be compatible with the material candidate to the left)	Potential advantages of this material/process combination	Potential disadvantages of this material/process combination	Selected material/process combination, and brief justification
1	Phone Inner Case	1 TPU	1 Our 3D printer	Plenty of room for changing design Relatively Cheap Very available for reprint	Larger tolerance Less flexible than other options	TPU with our own 3D printer, we found that the ninja flex was too flexible, and did a poor job of holding the phone correctly.
		2 NinjaFlex	2 Form 3	Most flexible option Tight tolerance	Must reserve Long print time Too flexible for use	
2	Phone Outer Case	1 PLA	1 Our 3D printer	Readily able to change dimensions Already have all its resources	Not as durable as alternatives Takes print time away from other components	PLA with our own 3D printer, since we can adjust sizes and tolerances of our parts in case they don't fit together as well
		2 Aluminum	2 Mill	Very durable exterior Very precise machining	Potentially too rigid to work with Uncomfortable to hold as a phone case	
3: Tools	Knife, firestarter, Screwdriver, bottle opener	1 Steel	1 Fablight	Very precise High hardness of tools Resistance to corrosion	Hard to work with features outside of the primary plane	Steel on the fablight, since most of the features must be tightly toleranced and fall within a single plane.
		2 Aluminum	2 Mill	Lightweight Familiar to our group	Less precise than what we need Relatively flimsy	

Fit and tolerancing specification table:

Fit #	Connects component #… (A)	…to component # or external object (B)	Function of fit (e.g. rotation joint, hold phone in place, etc)	ANSI grade of fit (e.g. RC6) or “snap fit”	Component A critical dimension tolerance e.g. diameter 10.0±0.1 mm	Component B critical dimension tolerance	Can your chosen manufacturing process deliver the required tolerance(s)?
1	3	1	Rotational joint	RT6	ø0.08+/-0.004	0.08+/-.012	Yes
2	3	2	Rotational Joint	RT6	ø0.08+/-0.004	0.08+/-.012	Yes
3	1	2	Hold two layers of the case together	Interference	ø0.05+/-0.012	ø0.08+/-0.012	Yes

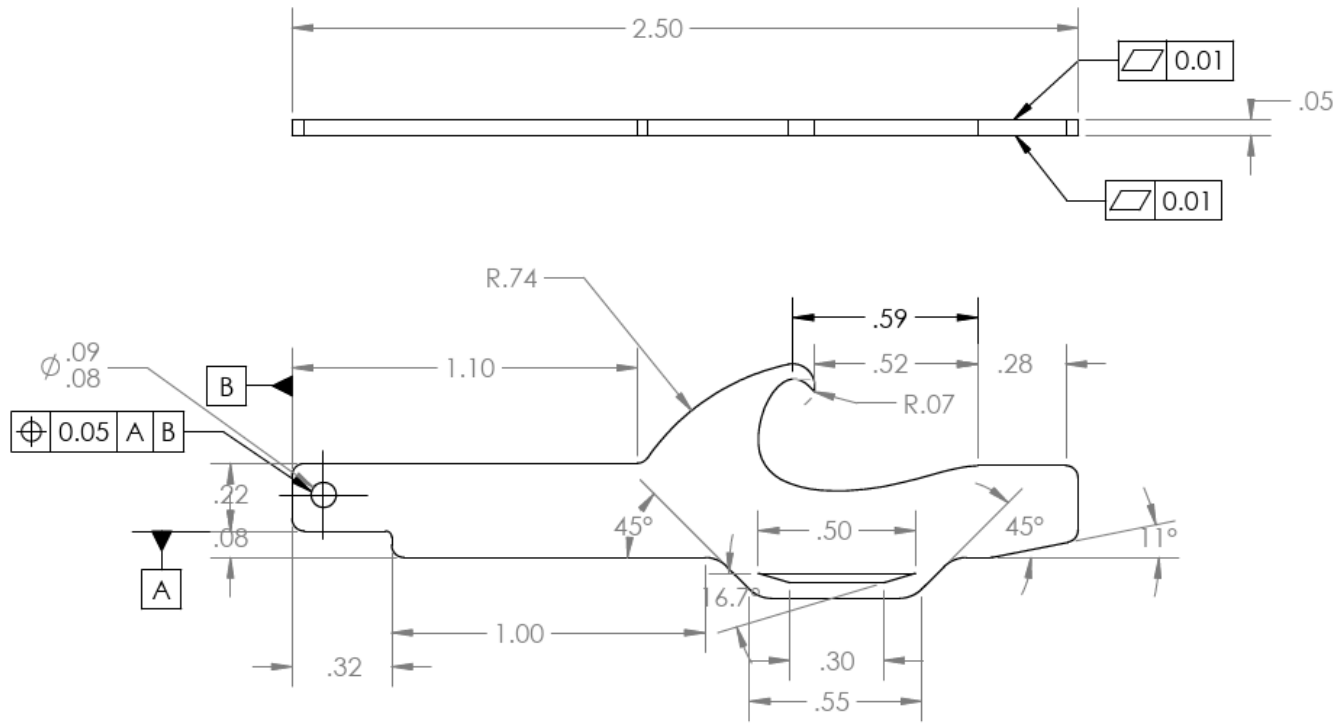

		UNLESS OTHERWISE SPECIFIED:		NAME	DATE
		DIMENSIONS ARE IN INCHES TOLERANCES: FRACTIONAL ± ANGULAR: MACH ± BEND ± TWO PLACE DECIMAL ± .016 THREE PLACE DECIMAL ± .001	DRAWN		
			CHECKED		
			ENG APPR.		
			MFG APPR.		
		INTERPRET GEOMETRIC TOLERANCING PER:	Q.A.		
		MATERIAL	COMMENTS:		
NEXT ASSY	USED ON	FINISH			
APPLICATION		DO NOT SCALE DRAWING			

TITLE:

SIZE	DWG. NO.	REV
A	Bottle Opener MKII	
SCALE: 2:1	WEIGHT:	SHEET 1 OF 1

PROPRIETARY AND CONFIDENTIAL

THE INFORMATION CONTAINED IN THIS DRAWING IS THE SOLE PROPERTY OF <INSERT COMPANY NAME HERE>. ANY REPRODUCTION IN PART OR AS A WHOLE WITHOUT THE WRITTEN PERMISSION OF <INSERT COMPANY NAME HERE> IS PROHIBITED.

SOLIDWORKS Educational Product. For Instructional Use Only.

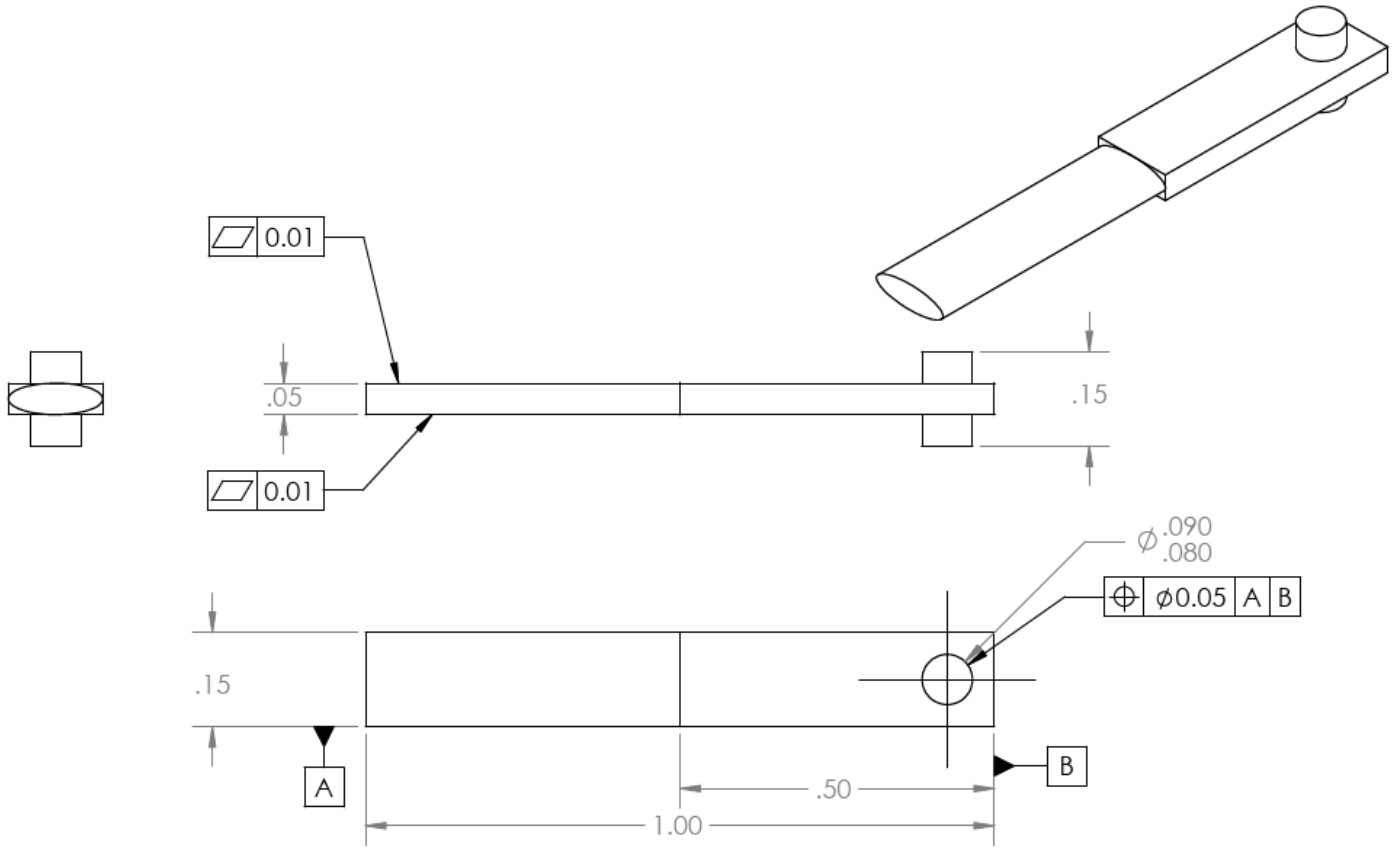

		UNLESS OTHERWISE SPECIFIED:		NAME	DATE
		DIMENSIONS ARE IN INCHES TOLERANCES: FRACTIONAL ± ANGULAR: MACH ± BEND ± TWO PLACE DECIMAL ± .016 THREE PLACE DECIMAL ± .001	DRAWN		
			CHECKED		
			ENG APPR.		
			MFG APPR.		
		INTERPRET GEOMETRIC TOLERANCING PER:	Q.A.		
		MATERIAL	COMMENTS:		
NEXT ASSY	USED ON	FINISH			
APPLICATION		DO NOT SCALE DRAWING			

TITLE:

SIZE	DWG. NO.	REV
A	Firestarter	
SCALE: 4:1	WEIGHT:	SHEET 1 OF 1

PROPRIETARY AND CONFIDENTIAL

THE INFORMATION CONTAINED IN THIS DRAWING IS THE SOLE PROPERTY OF <INSERT COMPANY NAME HERE>. ANY REPRODUCTION IN PART OR AS A WHOLE WITHOUT THE WRITTEN PERMISSION OF <INSERT COMPANY NAME HERE> IS PROHIBITED.

SOLIDWORKS Educational Product. For Instructional Use Only.

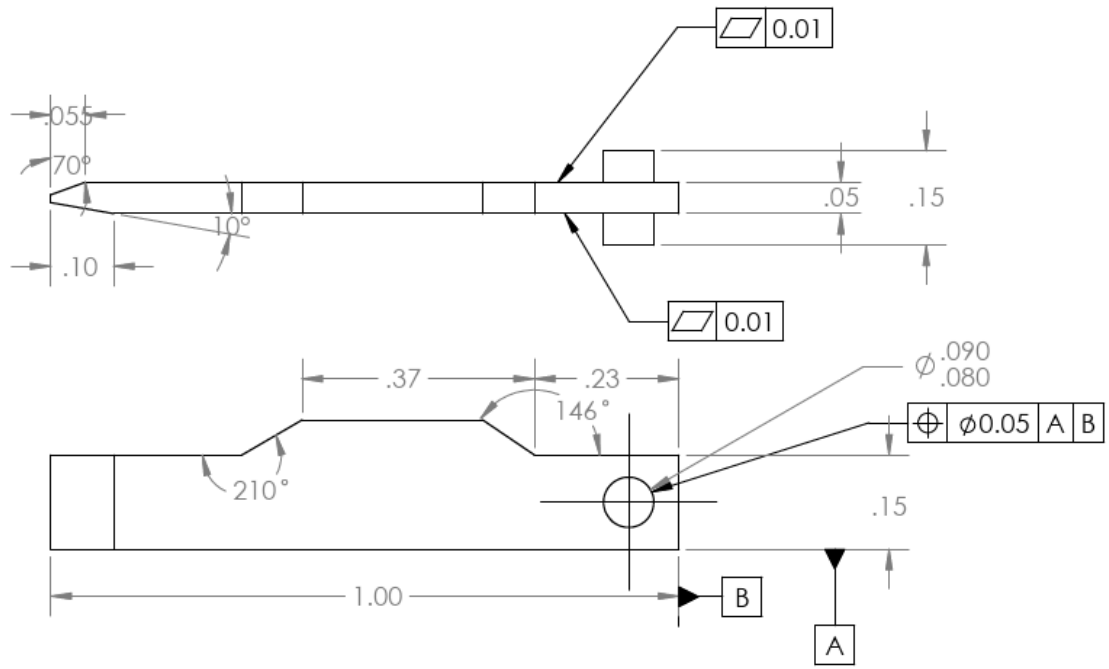

		UNLESS OTHERWISE SPECIFIED:		NAME	DATE
		DIMENSIONS ARE IN INCHES TOLERANCES: FRACTIONAL ± ANGULAR: MACH ± BEND ± TWO PLACE DECIMAL ±.016 THREE PLACE DECIMAL ±.001	DRAWN		
			CHECKED		
			ENG APPR.		
			MFG APPR.		
		INTERPRET GEOMETRIC TOLERANCING PER:	Q.A.		
		MATERIAL	COMMENTS:		
NEXT ASSY	USED ON	FINISH			
APPLICATION		DO NOT SCALE DRAWING			

TITLE:
Flathead Screwdriver

SIZE	DWG. NO.	REV
A	Flathead	
SCALE: 4:1	WEIGHT:	SHEET 1 OF 1

PROPRIETARY AND CONFIDENTIAL

THE INFORMATION CONTAINED IN THIS DRAWING IS THE SOLE PROPERTY OF <INSERT COMPANY NAME HERE>. ANY REPRODUCTION IN PART OR AS A WHOLE WITHOUT THE WRITTEN PERMISSION OF <INSERT COMPANY NAME HERE> IS PROHIBITED.

SOLIDWORKS Educational Product. For Instructional Use Only.

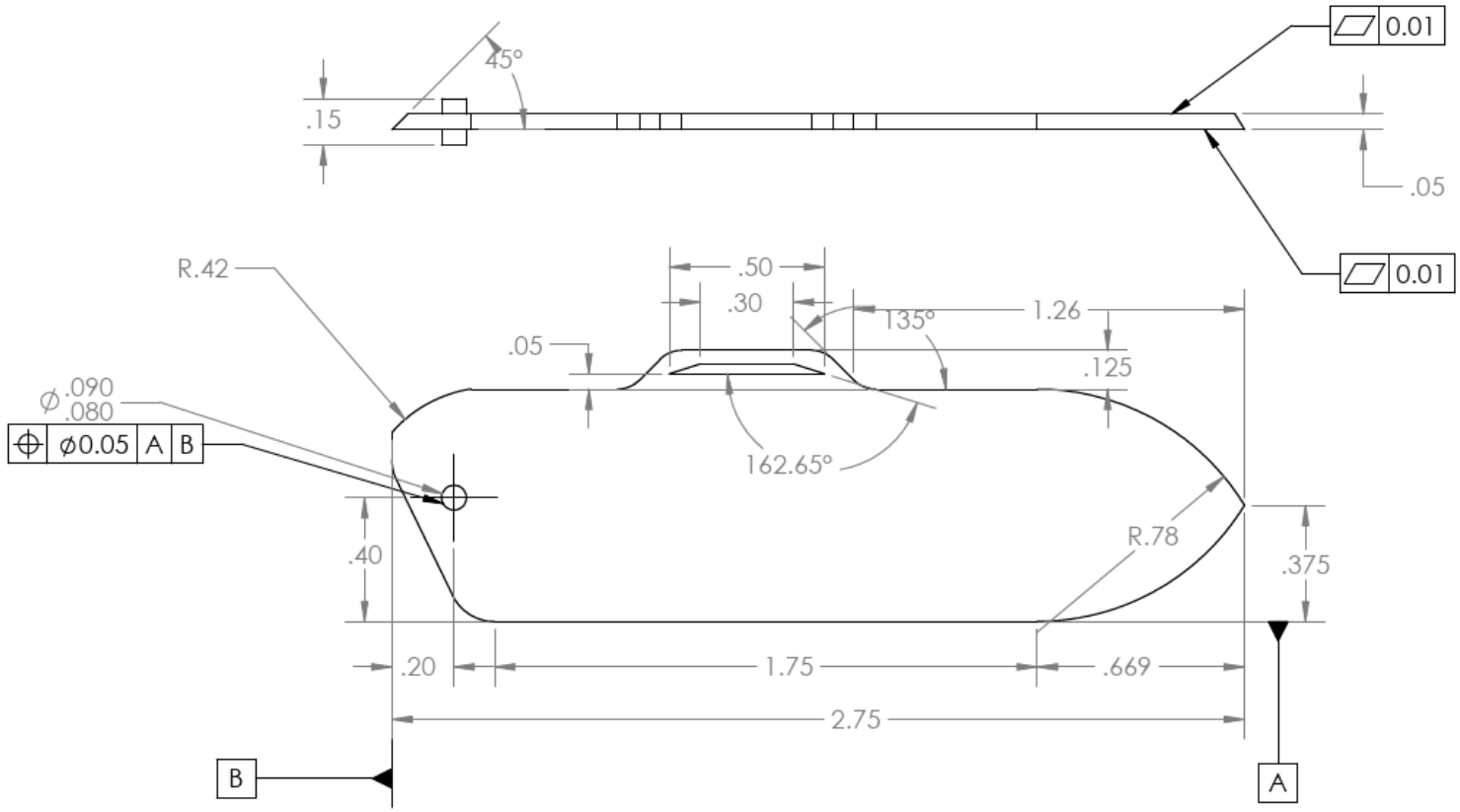

		UNLESS OTHERWISE SPECIFIED:		NAME	DATE
		DIMENSIONS ARE IN INCHES TOLERANCES: FRACTIONAL ± ANGULAR: MACH ± BEND ± TWO PLACE DECIMAL ±.016 THREE PLACE DECIMAL ±.001	DRAWN		
			CHECKED		
			ENG APPR.		
			MFG APPR.		
		INTERPRET GEOMETRIC TOLERANCING PER:	Q.A.		
		MATERIAL	COMMENTS:		
NEXT ASSY	USED ON	FINISH			
APPLICATION		DO NOT SCALE DRAWING			

TITLE:

SIZE	DWG. NO.	REV
A	Knife	
SCALE: 2:1	WEIGHT:	SHEET 1 OF 1

PROPRIETARY AND CONFIDENTIAL

THE INFORMATION CONTAINED IN THIS DRAWING IS THE SOLE PROPERTY OF <INSERT COMPANY NAME HERE>. ANY REPRODUCTION IN PART OR AS A WHOLE WITHOUT THE WRITTEN PERMISSION OF <INSERT COMPANY NAME HERE> IS PROHIBITED.

SOLIDWORKS Educational Product. For Instructional Use Only.

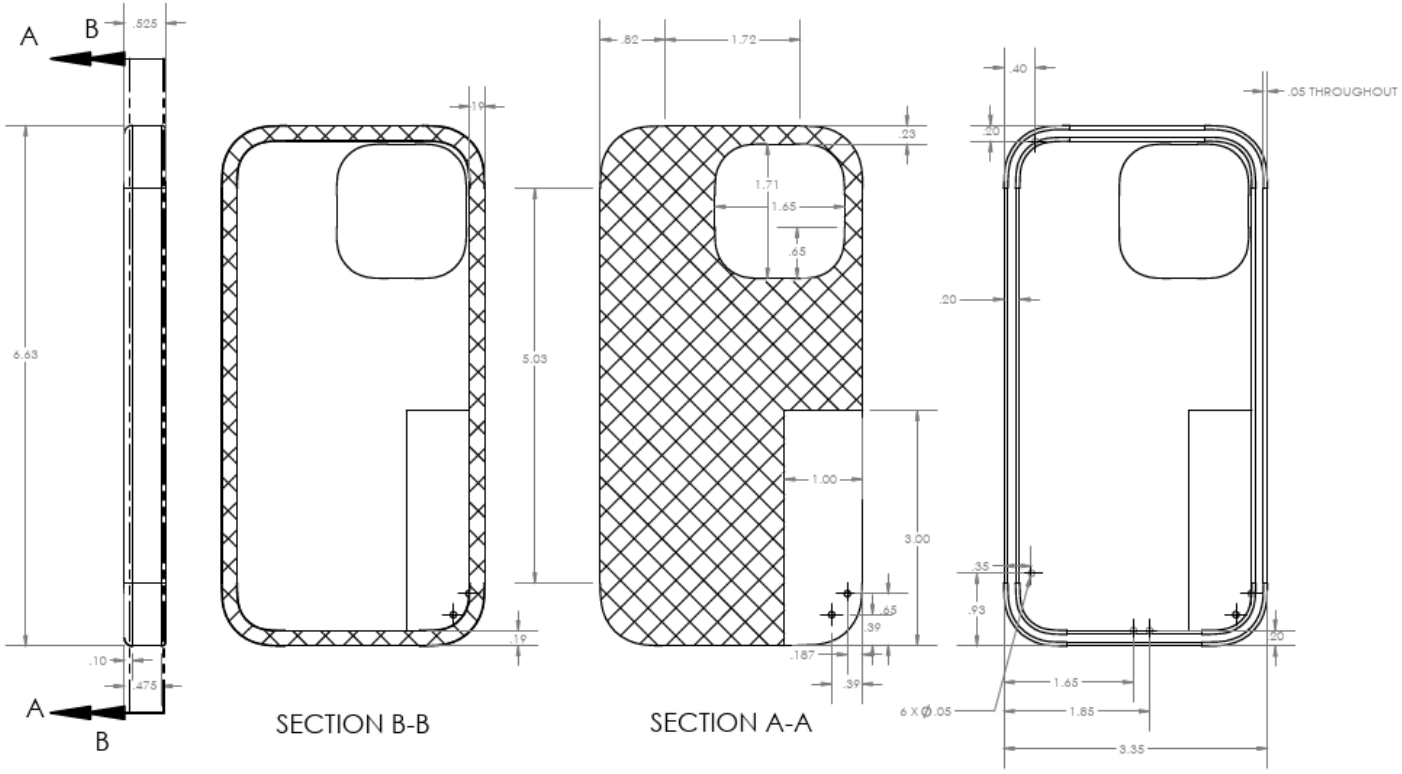

		UNLESS OTHERWISE SPECIFIED:		NAME	DATE
		DIMENSIONS ARE IN INCHES TOLERANCES: FRACTIONAL ± ANGULAR: MACH ± BEND ± TWO PLACE DECIMAL ± .016 THREE PLACE DECIMAL ± .001	DRAWN		
			CHECKED		
			ENG APPR.		
			MFG APPR.		
		INTERPRET GEOMETRIC TOLERANCING PER:	Q.A.		
		MATERIAL	COMMENTS:		
NEXT ASSY	USED ON	FINISH			
APPLICATION		DO NOT SCALE DRAWING			

TITLE:

SIZE	DWG. NO.	REV
A	Survival Phone Case	
SCALE: 1:2	WEIGHT:	SHEET 1 OF 1

PROPRIETARY AND CONFIDENTIAL

THE INFORMATION CONTAINED IN THIS DRAWING IS THE SOLE PROPERTY OF <INSERT COMPANY NAME HERE>. ANY REPRODUCTION IN PART OR AS A WHOLE WITHOUT THE WRITTEN PERMISSION OF <INSERT COMPANY NAME HERE> IS PROHIBITED.

SOLIDWORKS Educational Product. For Instructional Use Only.

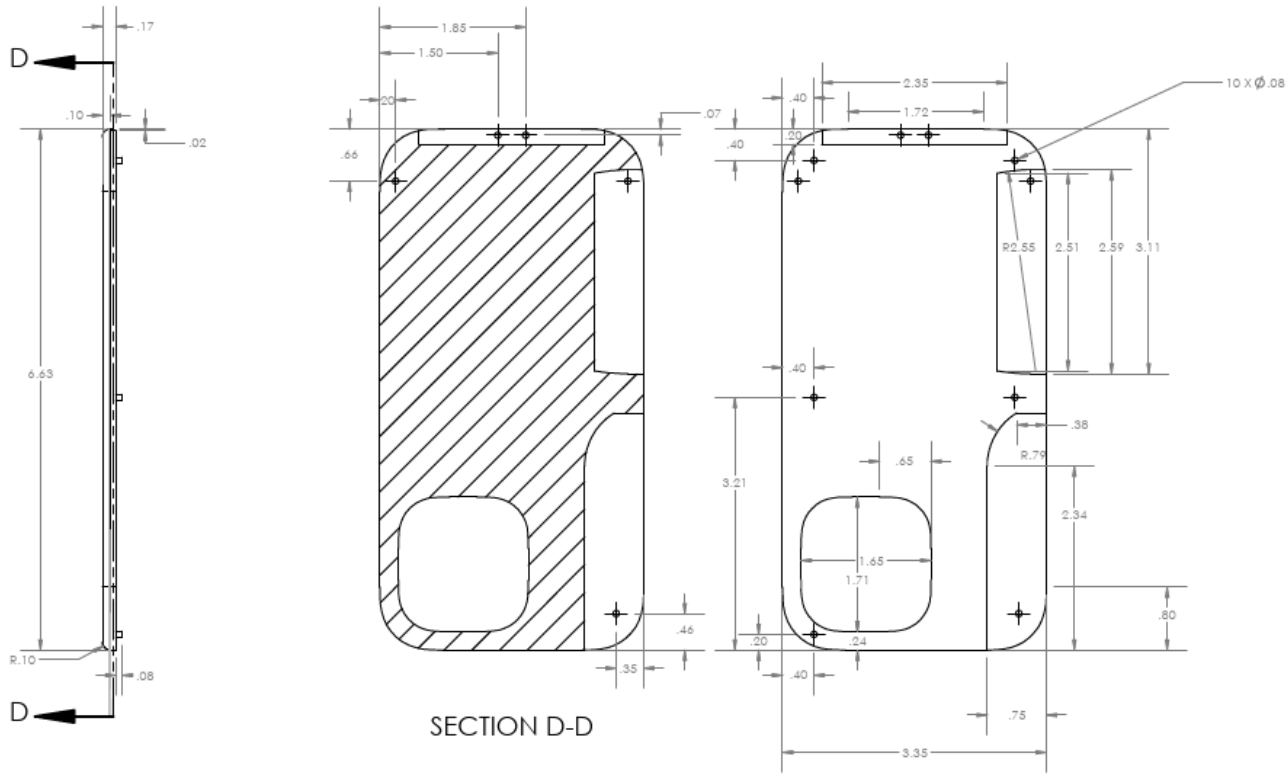

		UNLESS OTHERWISE SPECIFIED:		NAME	DATE
		DIMENSIONS ARE IN INCHES TOLERANCES: FRACTIONAL ± ANGULAR: MACH ± BEND ± TWO PLACE DECIMAL ±.016 THREE PLACE DECIMAL ±.001	DRAWN		
			CHECKED		
			ENG APPR.		
			MFG APPR.		
		INTERPRET GEOMETRIC TOLERANCING PER:	Q.A.		
		MATERIAL	COMMENTS:		
NEXT ASSY	USED ON	FINISH			
APPLICATION		DO NOT SCALE DRAWING			

TITLE:

SIZE	DWG. NO.	REV
A	Survival Phone Back	
SCALE: 1:2	WEIGHT:	SHEET 1 OF 1

PROPRIETARY AND CONFIDENTIAL

THE INFORMATION CONTAINED IN THIS DRAWING IS THE SOLE PROPERTY OF <INSERT COMPANY NAME HERE>. ANY REPRODUCTION IN PART OR AS A WHOLE WITHOUT THE WRITTEN PERMISSION OF <INSERT COMPANY NAME HERE> IS PROHIBITED.

SOLIDWORKS Educational Product. For Instructional Use Only.

Photos

Final Look

Inner Layer

Old Iterations
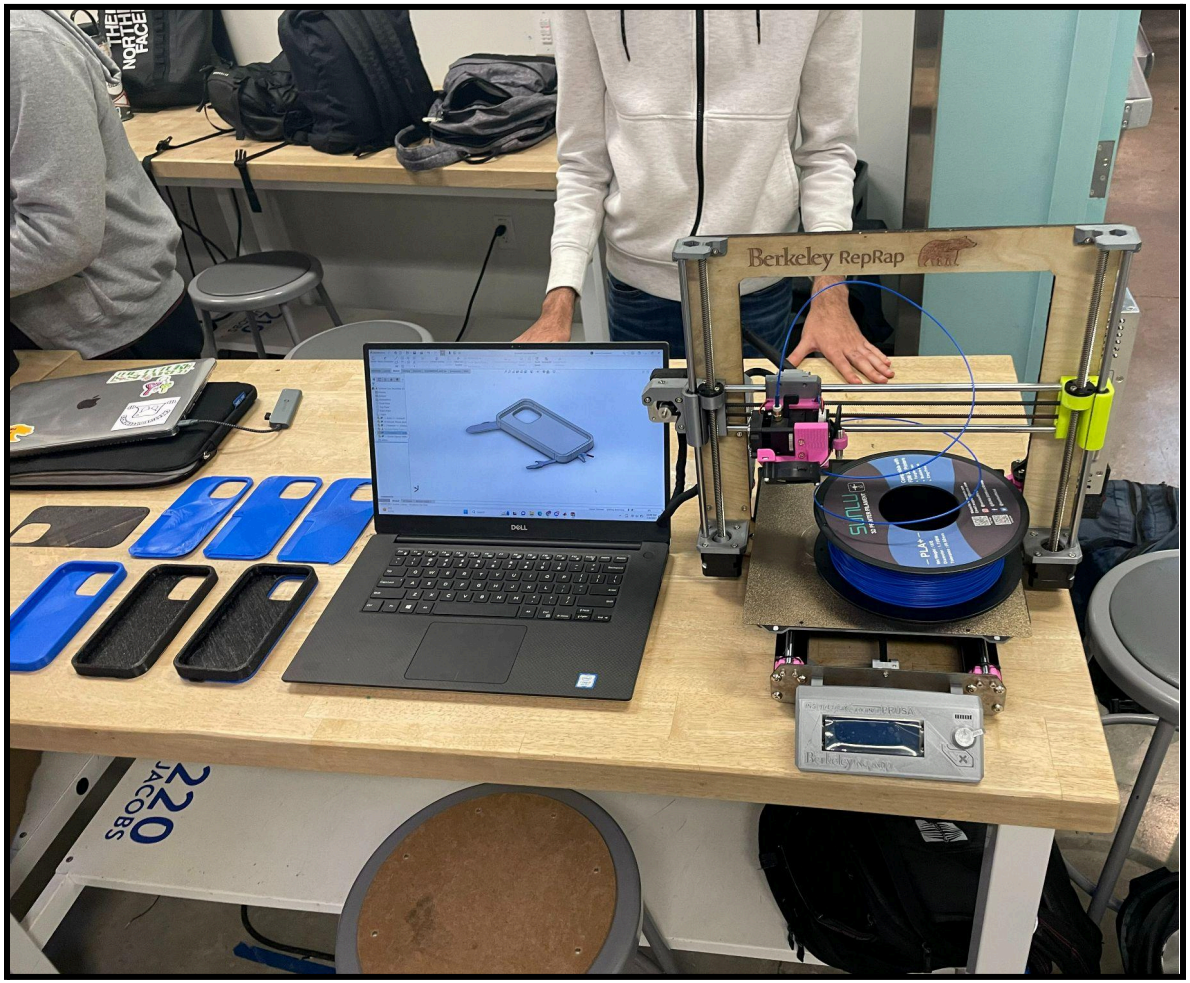
Presentation