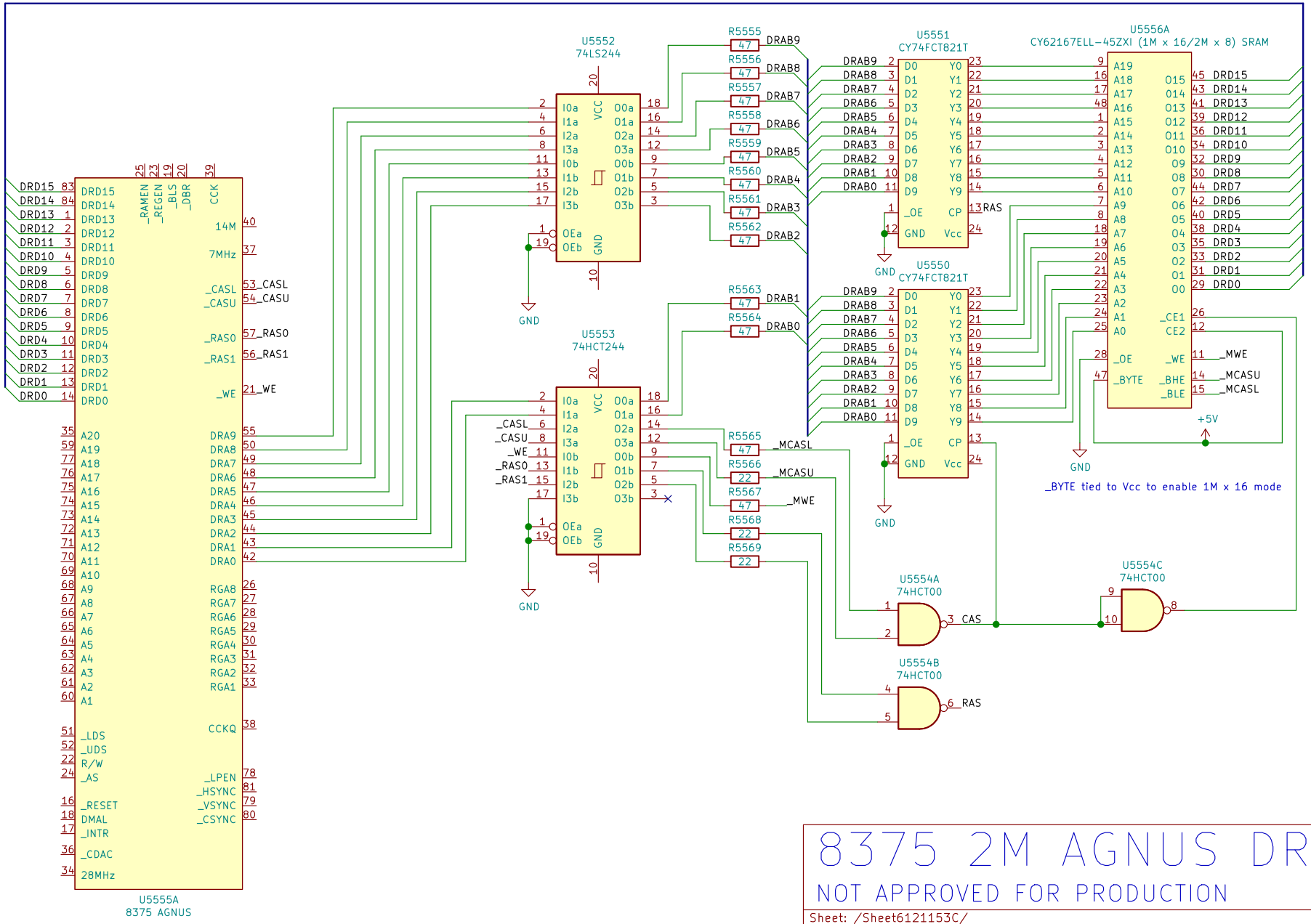

8375 2M AGNUS DRAFT

NOT APPROVED FOR PRODUCTION

Sheet: /Sheet6121153C/
File: file6121153C.sch

Title: AMIGA 2000 EATX

Size: A4	Date:	**Rev:** 0
KiCad E.D.A. kicad 5.1.6+dfsg1-1		Id: 14/14