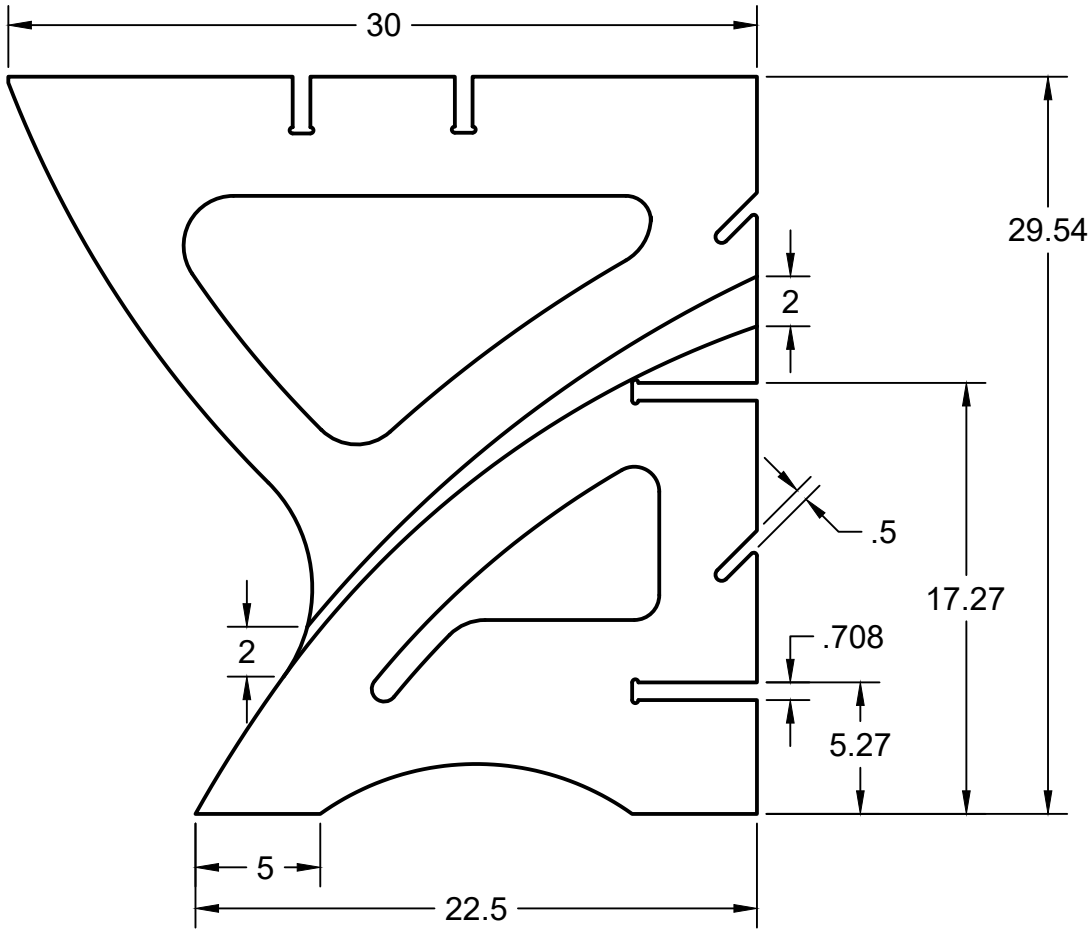

	PROJECT Corner table				
	TITLE End leg				
APPROVED	SIZE	CODE	DWG NO		REV
CHECKED	A				
DRAWN Jason Webb 12/2/2017	SCALE .13	WEIGHT		SHEET 1/1	