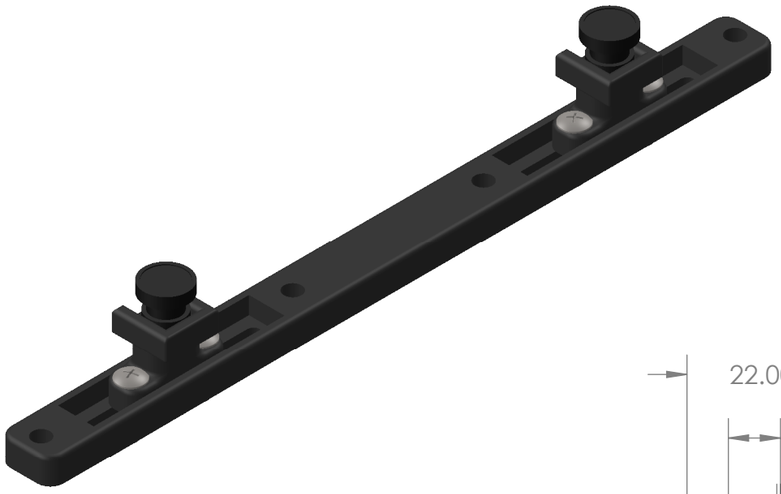

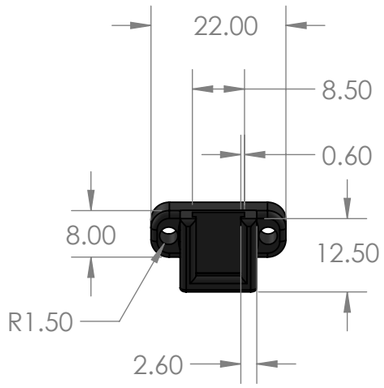

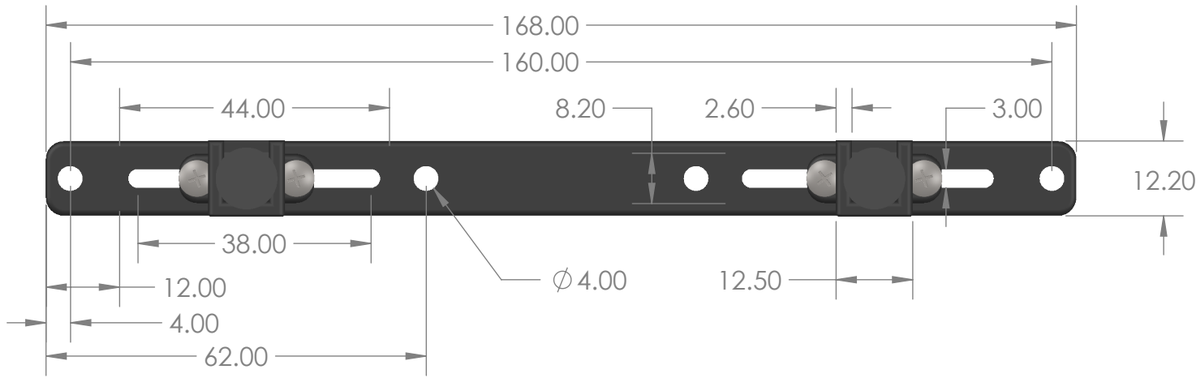

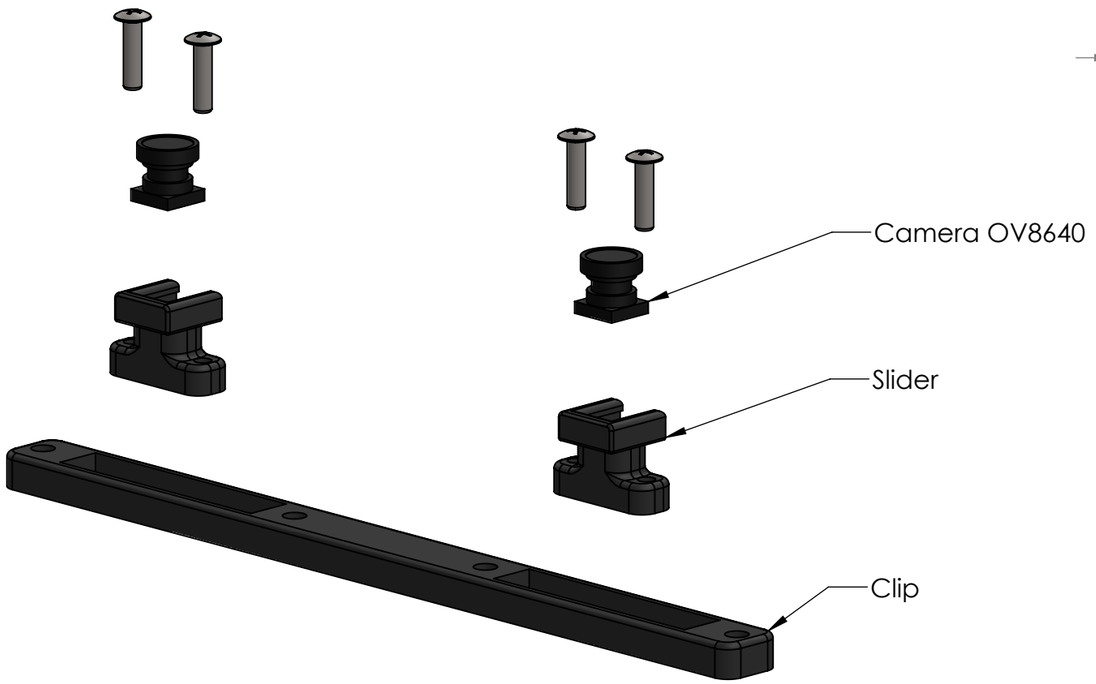

March 13, 2026		REVISION	2.0
University of San Agustin			
Camera Set			
NAME		TITLE: World Navigation Hat	
D'Souza, Jason C.	MATERIAL: 3D Printer Filament		
Pabito, Ethel Herna C.			
Wang, ChenLin			
Daywan, Vince Ginno B.	WEIGHT:	SCALE:1:1	SHEET 1 OF 1