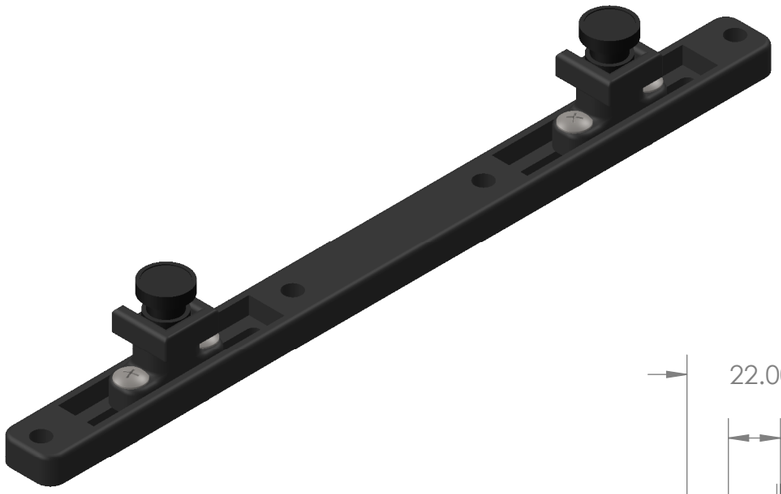

5.00
6.00
6.00
17.00

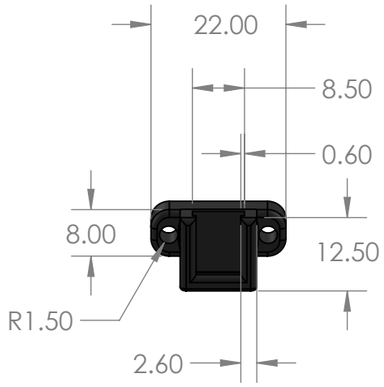
22.00
8.50
0.60
8.00
12.50
R1.50
2.60

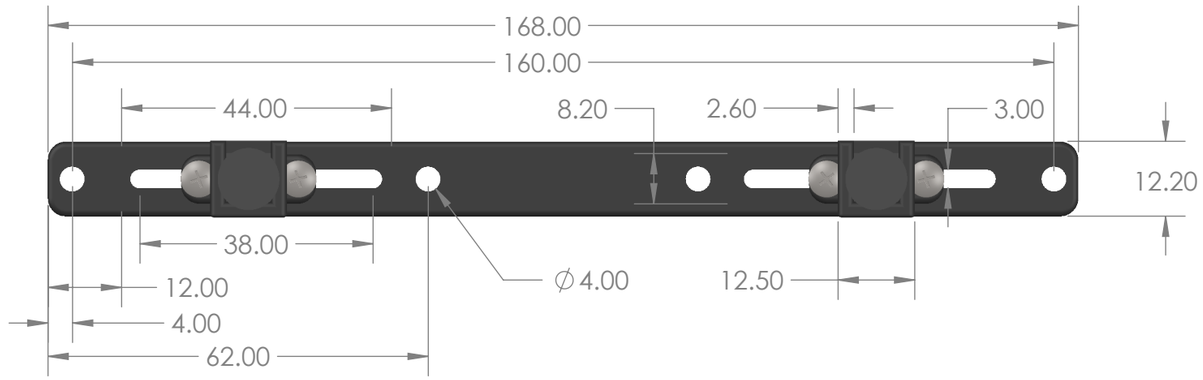
168.00
160.00
44.00
8.20
2.60
3.00
12.20
38.00
12.00
4.00
62.00
∅4.00
12.50

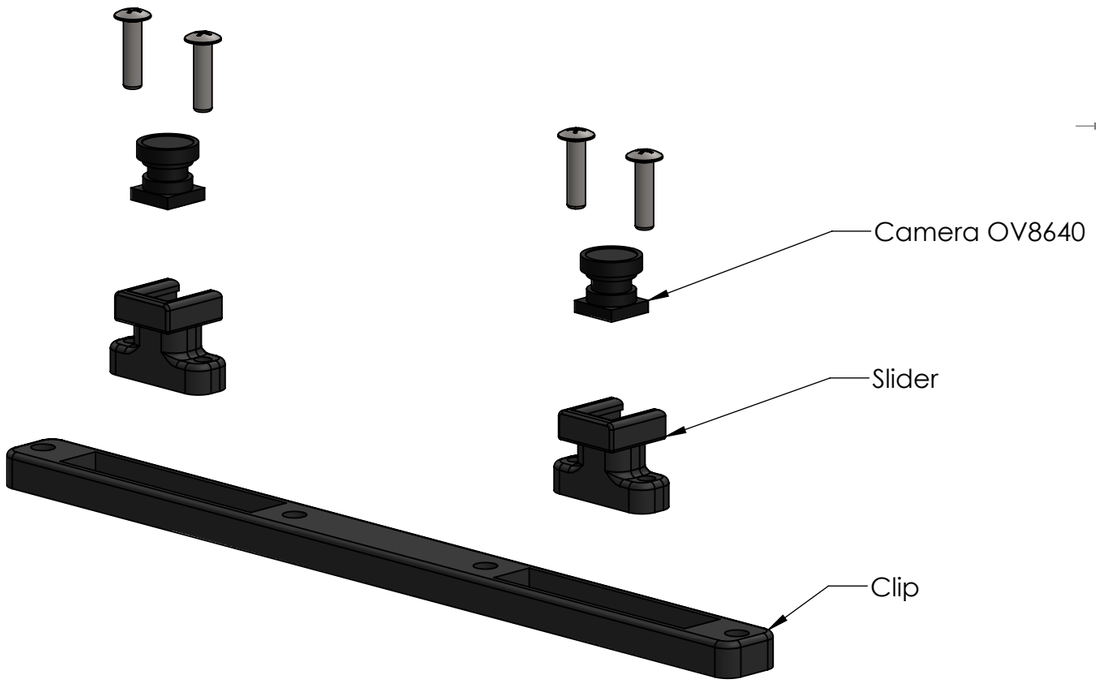
Camera OV8640
Slider
Clip

38.00
R1.50
∅3.00
∅4.00
R3.00