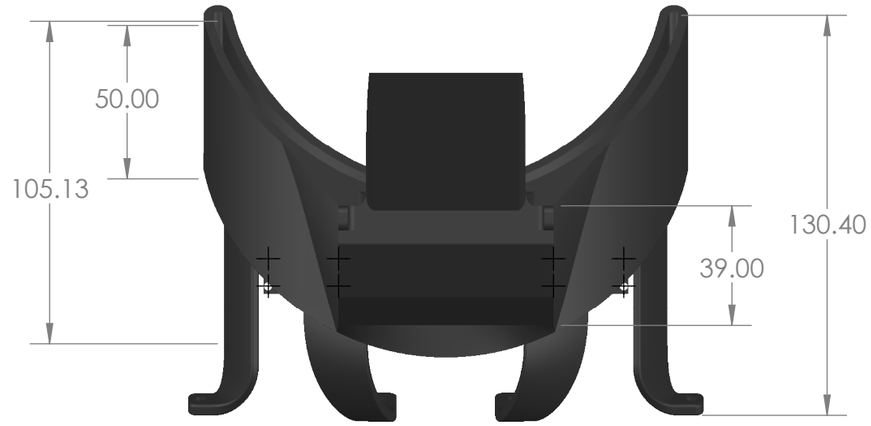

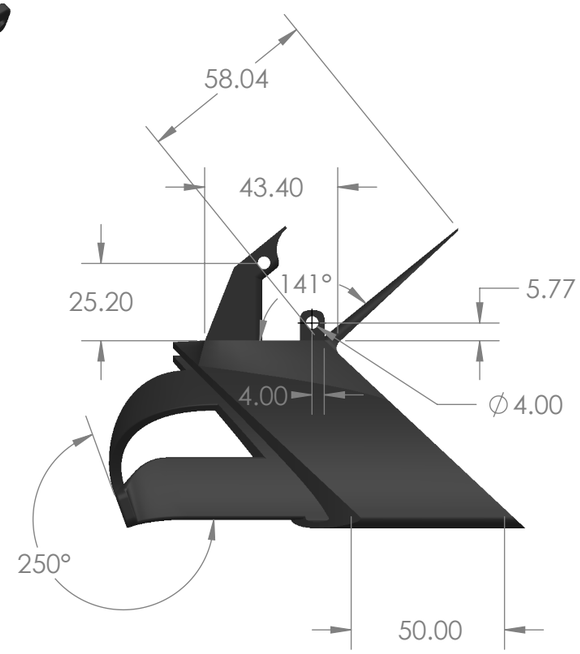

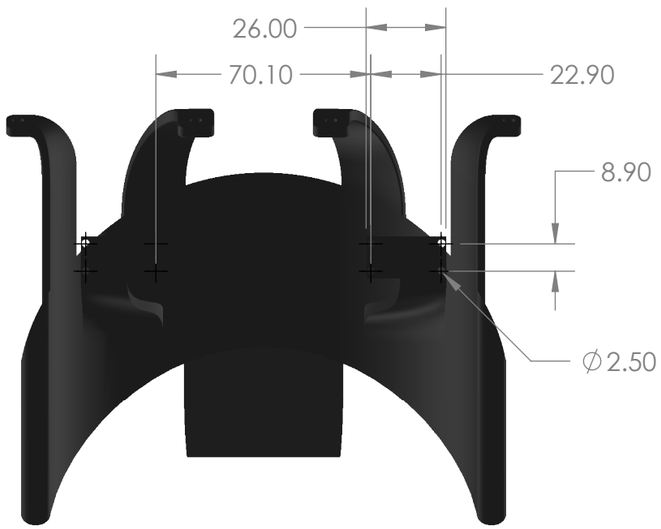

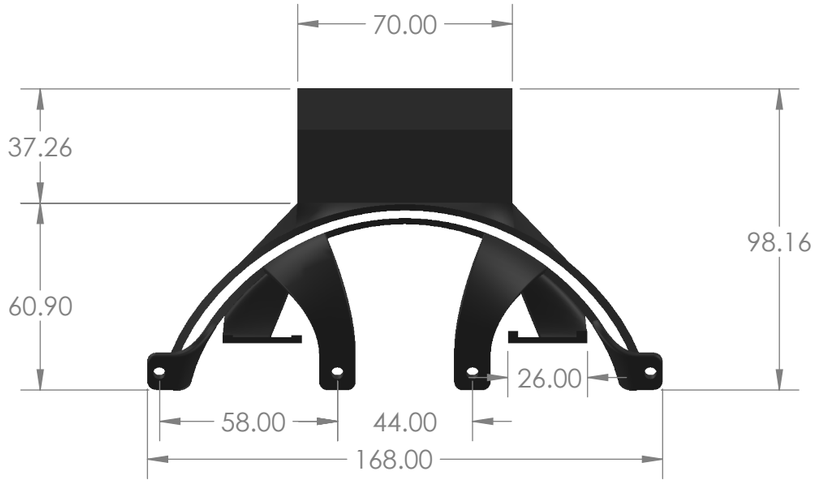

March 13, 2026		REVISION	2.0
University of San Agustin			
			Main
NAME		TITLE:	
D'Souza, Jason C.	MATERIAL:	World Navigation Hat	
Pabito, Ethel Herna C.	3D Printer Filament		
Wang, ChenLin			
Daywan, Vince Ginno B.	WEIGHT:	SCALE:1:2	SHEET 1 OF 1