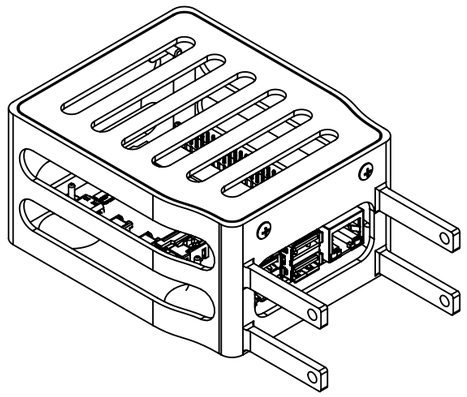

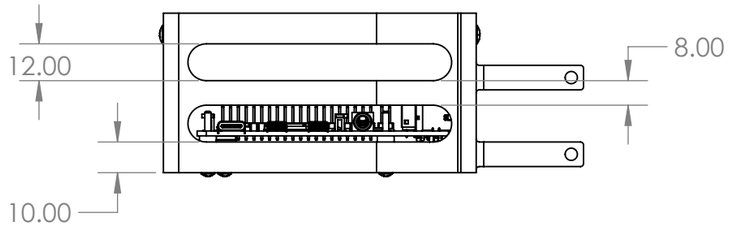
12.00
8.00
10.00

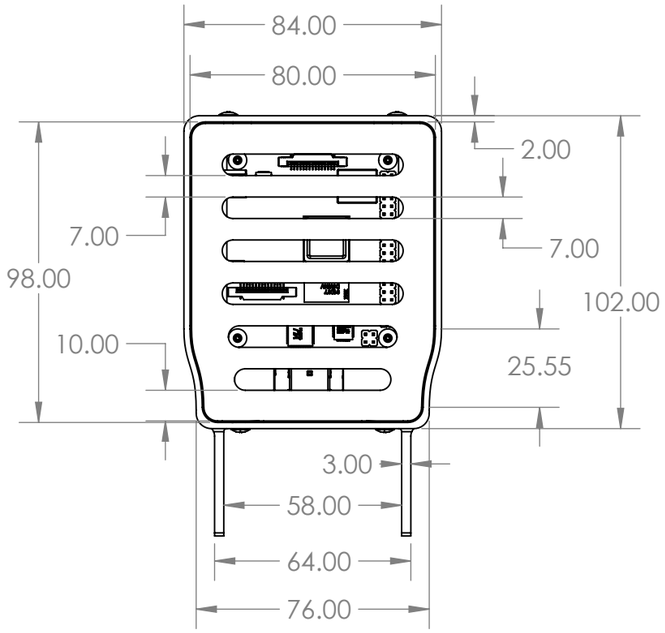
84.00
80.00
2.00
7.00
7.00
98.00
102.00
10.00
25.55
3.00
58.00
64.00
76.00

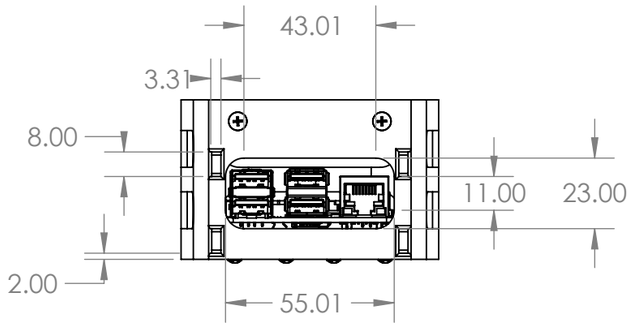
43.01
3.31
8.00
11.00
23.00
2.00
55.01

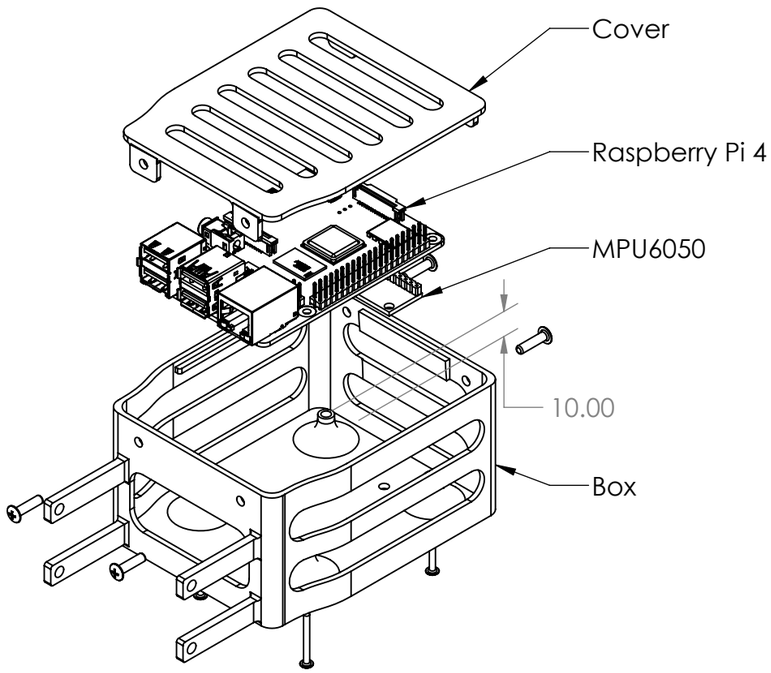
Cover
Raspberry Pi 4
MPU6050
10.00
Box

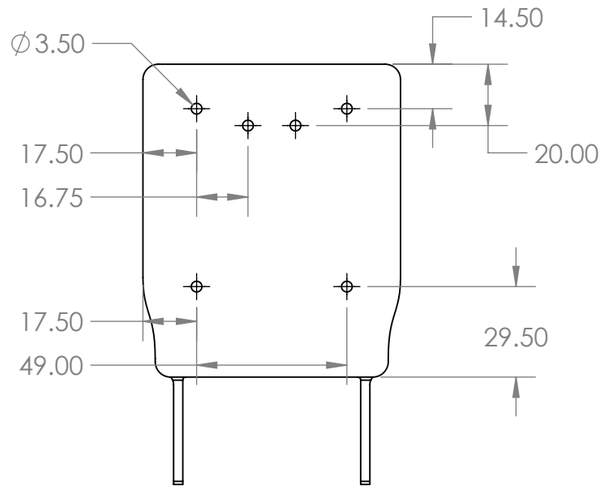
∅3.50
14.50
17.50
20.00
16.75
17.50
29.50
49.00

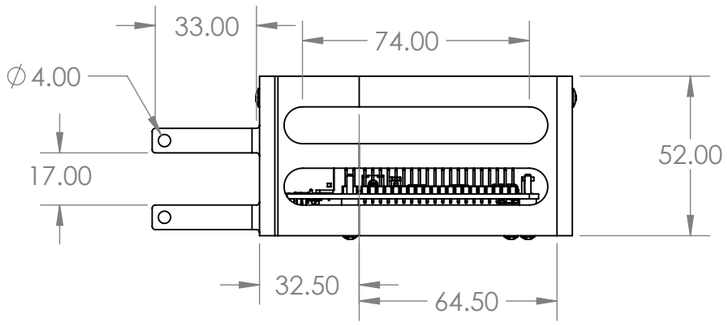
33.00
74.00
∅4.00
52.00
17.00
32.50
64.50