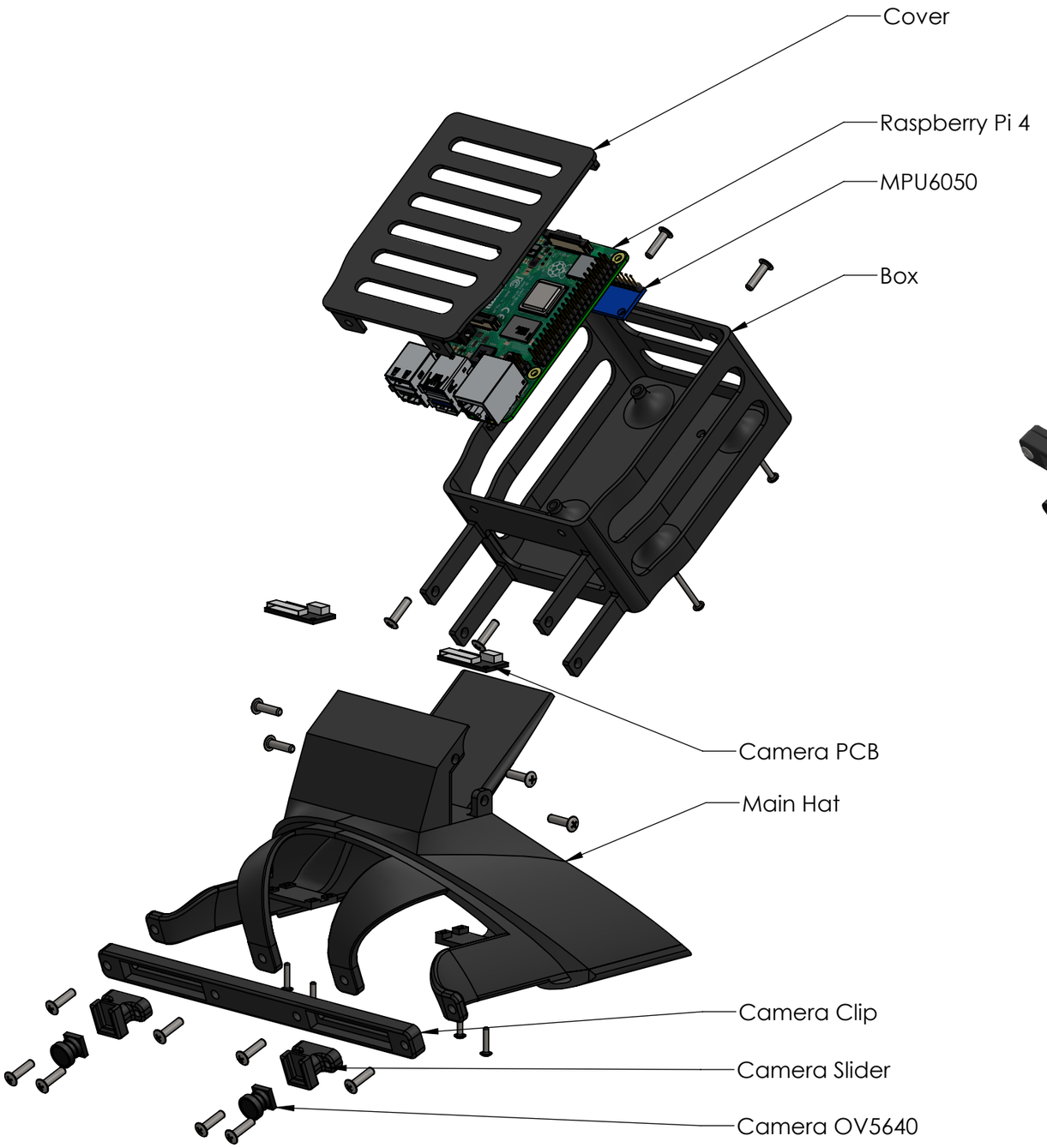
Cover
Raspberry Pi 4
MPU6050
Box
Camera PCB
Main Hat
Camera Clip
Camera Slider
Camera OV5640