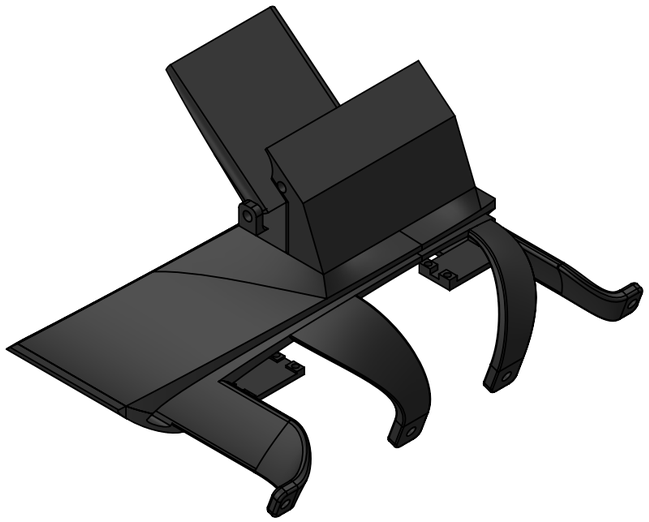

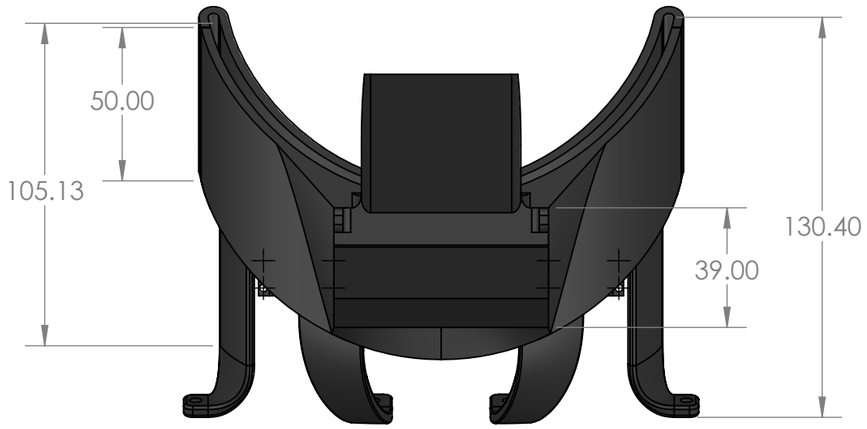
50.00
105.13
130.40
39.00

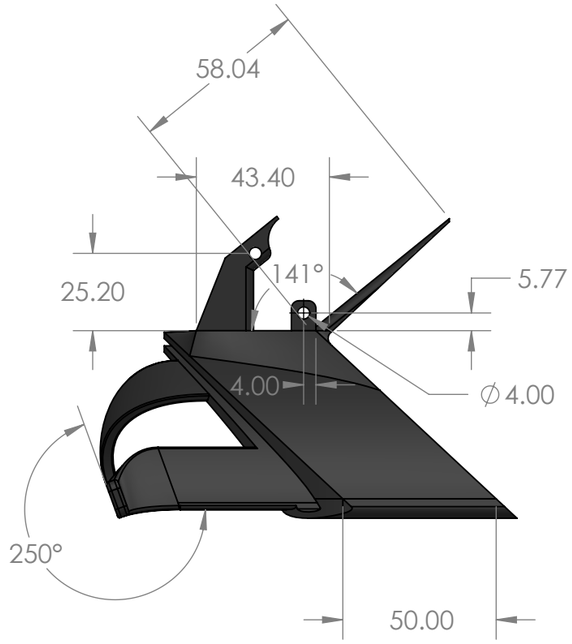
58.04
43.40
25.20
141°
5.77
4.00
∅4.00
250°
50.00

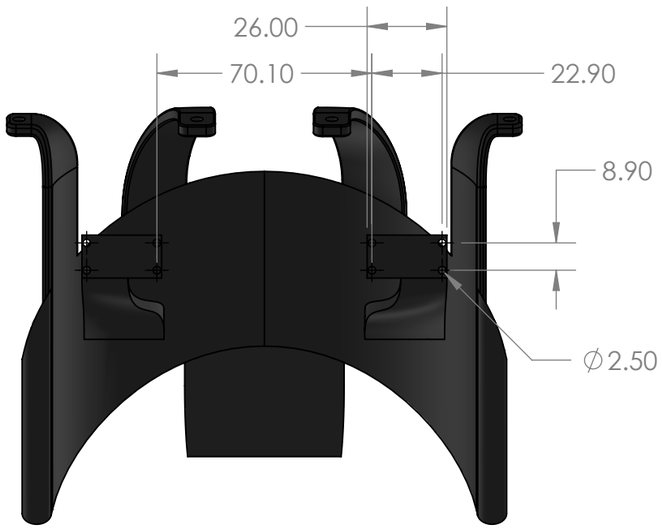
26.00
70.10
22.90
8.90
∅2.50

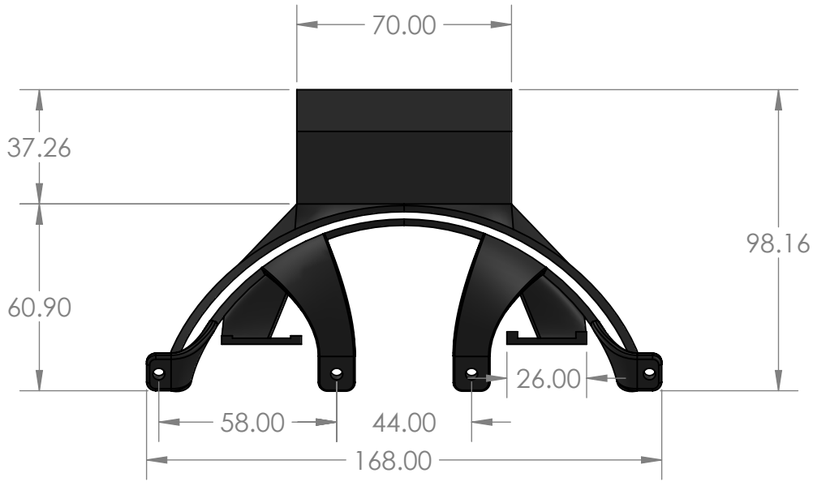
70.00
37.26
60.90
98.16
26.00
58.00
44.00
168.00