Elektro-Automatik

Programming Guide

ModBus & SCPI

For USB, GPIB, Ethernet and AnyBus modules

Attention! This document is only valid for the device series listed in section *1.1.2* and also only valid as from the firmware version listed there.

Doc ID: PGMBEN
Revision: 26
Date: 10-10-2025

TABLE OF CONTENTS

1. GENERAL 5

1.1 About this document ... 5
1.1.1 Copyright ... 5
1.1.2 Validity ... 5
1.2 Explanation of symbols ... 6
1.3 Warranty ... 6
1.4 Limitation of liability ... 6

2. ANYBUS MODULES 7

2.1 Overview ... 7
2.2 Anybus module support ... 8
2.3 Before you begin ... 8
2.4 Installation of an Anybus module ... 8
2.5 Network with linear topology ... 9
2.6 Network access via HTTP ... 9
2.7 Network access via TCP ... 9

3. INTRODUCTION 10

3.1 Access to the device ... 10
3.2 Control locations ... 10
3.3 Message timing and command execution time ... 10
3.3.1 Execution time when writing ... 11
3.3.2 Response time when reading ... 11
3.3.3 Timing of messages ... 12
3.4 Overview of the communication protocols ... 13
3.5 Special characteristics of remote control ... 14
3.6 Fragmented messages on serial transmissions ... 14
3.7 Connection timeout ... 14
3.8 Effective resolution when programming ... 14
3.9 Minimum ramp slope (arbitrary function generator) ... 15
3.9.1 Minimum frequency slope (arbitrary function generator) ... 16
3.10 Special situations ... 16
3.10.1 Alarm "Power fail" ... 16

4. THE MODBUS PROTOCOL 17

4.1 General information about ModBus RTU ... 17
4.2 General information about ModBus TCP ... 17
4.3 Format of set values and resolution ... 17
4.4 Translating set values and actual values ... 18
4.5 Communication with the device via AnyBus modules ... 18
4.5.1 Ethernet ... 18
4.5.2 Profinet / Profibus ... 18
4.5.3 CANopen ... 18
4.5.4 CAN ... 18
4.5.5 ModBus TCP ... 18
4.5.6 EtherCAT ... 18
4.5.7 RS232 ... 18
4.6 Communication USB port (COM) ... 19
4.6.1 USB driver installation ... 19
4.6.2 First steps ... 19
4.7 About the register lists ... 19
4.7.1 Columns "ModBus address" ... 19
4.7.2 Columns "Function" ... 19
4.7.3 Column "Data type" ... 19
4.7.4 Column "Access" ... 20
4.7.5 Column "Number of registers" ... 20

4.7.6 Column "Data" ... 20
4.7.7 Columns "Profibus slot/Profinet subslot" & "Profinet index" ... 20
4.7.8 Column "EtherCAT SDO/PDO?" ... 20
4.8 ModBus RTU in detail ... 21
4.8.1 Message types ... 21
4.8.2 Functions ... 21
4.8.3 Control messages (write) ... 22
4.8.4 Query message ... 22
4.8.5 Response message (read) ... 23
4.8.6 The ModBus checksum ... 23
4.8.7 Examples of ModBus RTU messages ... 24
4.9 ModBus TCP in detail ... 26
4.9.1 Example for a ModBus TCP message ... 26
4.10 ModBus communication errors ... 27
4.11 Explanation about specific registers ... 28
4.11.1 Register 171 ... 28
4.11.2 Register 411 ... 28
4.11.3 Registers 500-503 (set values) ... 28
4.11.4 Registers 498, 499 and 504 (additional set values) ... 28
4.11.5 Register 505 (1. Device status register) ... 28
4.11.6 Register 511 (2. Device status register) ... 29
4.11.7 Registers 650 - 662 (Master-slave configuration) ... 29
4.11.8 Registers 850 - 6695 (Function generator) ... 29
4.11.9 Registers 850 - 1692 (Sequence generator in ELR 5000) ... 32
4.11.10 Registers 850 - 854 and 900 - 908 (Function generator in EL 3000 B) ... 32
4.11.11 Registers 9000 - 9009 (Adjustment limits) ... 33
4.11.12 Registers 10007 - 10900 ... 33
4.11.13 Registers from 11000 (MPP tracking feature) ... 33
4.11.14 Registers from 11500 (battery test) ... 34
4.11.15 Register from 12000 (advanced photovoltaics simulation acc. DIN EN 50530) ... 35

5. SCPI PROTOCOL 37

5.1 Format of set values and actual values ... 37
5.2 Syntax ... 37
5.2.1 Upper and lower case ... 37
5.2.2 Long form and short form ... 37
5.2.3 Concatenated commands ... 38
5.2.4 Termination character ... 38
5.2.5 Communication and other errors ... 38
5.3 Examples for a first start ... 39
5.3.1 Ping or query device information ... 39
5.3.2 Switch to remote control or back to manual control ... 39
5.4 Command groups ... 40
5.4.1 Standard IEEE commands ... 40
5.4.2 Status registers ... 41
5.4.3 Set value commands ... 45
5.4.4 Measuring commands ... 48
5.4.5 Status commands ... 49
5.4.6 Commands for protective features ... 51
5.4.7 Commands for supervision features ... 53
5.4.8 Commands for adjustment limits ... 54
5.4.9 Commands for master-slave operation ... 55
5.4.10 Commands for general queries ... 56
5.4.11 Commands for device configuration ... 58
5.4.12 Commands for remote control of the function generator ... 65
5.4.13 Commands for remote control of the sequence generator (ELR 5000 only) ... 71
5.4.14 Commands for remote control of the MPP tracking feature ... 73
5.4.15 Commands for alarm management ... 75
5.4.16 Commands for presets (Recall, only PSI 5000) ... 76

5.4.17 Commands for the extended PV simulation ... 78
5.4.18 Commands for the battery test function ... 83
5.4.19 Special syntax for PS 2000 B series with color TFT screen ... 88
5.4.20 EL 3000 B series specific commands ... 90
5.5 Example applications ... 93
5.5.1 Configure and control master-slave with SCPI ... 93
5.5.2 Programming examples for the function generator ... 94
5.5.3 Programming examples for PV simulation (DIN EN 50530) ... 98
5.5.4 Programming examples for MPP tracking ... 103
5.5.5 Programming examples for EL 3000 B ramp generator ... 106

6. PROFIBUS & PROFINET 108
6.1 General ... 108
6.2 Preparation ... 108
6.3 Slot configuration for Profibus ... 108
6.4 Slot configuration for Profinet ... 109
6.5 Cyclic communication via Profibus/Profinet ... 109
6.6 Acyclic communication via Profibus/Profinet ... 109
6.7 Examples for acyclic access ... 110
6.7.1 Activate/deactivate remote control ... 110
6.7.2 Send a set value ... 111
6.7.3 Read something ... 111
6.8 Data interpretation ... 112

7. CANOPEN 113
7.1 Restrictions ... 113
7.2 Preparation (CANopen only) ... 113
7.3 User objects (indexes) ... 113
7.3.1 Translation ADI -> register ... 113
7.4 Specific examples ... 114
7.5 Differences to ModBus ... 114
7.5.1 When using the arbitrary generator ... 114
7.6 Error codes ... 115

8. CAN 116
8.1 Preparation ... 116
8.2 Introduction ... 116
8.3 Message formats ... 116
8.3.1 Normal sending (writing) ... 116
8.3.2 Cyclic sending (writing) ... 117
8.3.3 Querying ... 118
8.3.4 Normal reading ... 118
8.3.5 Cyclic reading ... 119
8.3.6 Communication error codes ... 121
8.3.7 Examples ... 122

9. ETHERCAT 123
9.1 Preamble ... 123
9.2 Restrictions ... 123
9.3 Integrating your device in TwinCAT ... 123
9.4 Data objects ... 123
9.4.1 Sub objects in the RxPDO ... 124
9.4.2 Sub objects in the TxPDO ... 124
9.4.3 SDOs ... 125
9.5 Control ... 125
9.5.1 Use of the CANopen data objects ... 125

A. APPENDIX 126
A1. Device classes ... 126

1. General

1.1 About this document

1.1.1 Copyright

Reprinting, copying, also partially, usage for other purposes as foreseen of this manual are forbidden and breach may lead to legal process.

1.1.2 Validity

This manual is valid for the below listed equipment including derived variants. This programming guide is connected to the firmware version of the communication unit KE. Older KE firmwares can thus be partially incompatible with this document. It's recommended to **memorize the abbreviation** from the table below. It's later used as reference to determine whether a specific command or feature is supported by your device.

In case you find a firmware version listed in table below belonging to your device and which isn't released yet, then it means that this document will only be partially valid for your device. In this case we recommend to refer to the previous document version.

Series	Firmware from	Abbreviation
EL 3000 B	KE: 2.04	**EL3**
EL 9000 B 3U - 24A / HP / 2Q	KE: 2.31 (standard) / KE: 2.14 (GPIB)	**ELR9**
EL 9000 B Slave	KE: 2.31	**ELR9**
EL 9000 DT / EL 9000 T	KE: 3.08	**DT**
ELR/ELM 5000	HMI: 2.03	**ELR5**
ELR 9000 / ELR 9000 HP	KE: 2.31 (standard) / KE: 2.14 (GPIB)	**ELR9**
ELR 10000	KE: 3.02	**ELR1**
PS 2000 B TFT (only models with color display)	HMI: 2.02	**PS2**
PS 5000	KE: 2.05	**PS5**
PSI 5000	KE: 3.08	**PSI5**
PS 9000 1U/2U/3U (series from 2014)	KE: 3.08	**PS9**
PS 9000 T	KE: 3.08	**PST**
PS 10000	KE: 3.02	**PS1**
PSB 9000	KE: 2.31	**PSB**
PSB 10000 / PSB 10000 Slave	KE: 3.02	**PSB1**
PSBE 9000	KE: 2.31	**PSBE**
PSBE 10000	KE: 3.02	**PSBE1**
PSE 9000	KE: 2.31	**PSE**
PSI 9000 2U / 3U / WR / SLAVE (series from 2014)	KE: 2.31 (standard) / KE: 2.14 (GPIB)	**PSI9**
PSI 9000 15U / 24U	KE: 2.31	**PSI9**
PSI 9000 DT	KE: 3.08	**DT**
PSI 9000 T	KE: 3.06	**PSIT**
PSI 10000	KE: 3.02	**PSI1**
PS 3000 C	KE: 2.04	**PS3**
All 10000s series (PSB, PSBE, PS, PSI, ELR)	KE: 3.02	**10K**

1.2 Explanation of symbols

Warning and safety notices as well as general notices in this document are shown in a box with a symbol as follows:

⚠	Symbol for general safety notices (instructions and damage protection bans)
!	*Symbol for general notices*

1.3 Warranty

The manufacturer guarantees the functional competence of the applied technology and the stated performance parameters. The warranty period begins with the delivery of free from defects equipment.

Terms of guarantee are included in the general terms and conditions of the manufacturer.

1.4 Limitation of liability

All statements and instructions in this manual are based on current norms and regulations, up-to-date technology and our long term knowledge and experience. The manufacturer accepts no liability for losses due to:

- Usage for purposes other than designed
- Use by untrained personnel
- Modification of devices by the customer
- Technical changes of devices
- Use of not authorized spare parts

2. Anybus modules

Besides default and built-in interfaces (USB, analog) a device might come with, many series support to install a further, digital interface. It comes in form of a small module, can be bought later and retrofitted on location. The device would detect and configure the module automatically, unless the device and its installed firmware is older than the module. In this case it's usually required to install a firmware update on either the device, the module or both.

2.1 Overview

Module	Type / Connectors	LED indication		Front view
IF-AB-CAN	CAN 2.0B, 1x Sub-D 9pole, male	RUN	Indicates data traffic (green, flickering)	
		ERR	Will be lit (green) while a communication error is present.	
IF-AB-CANO	CANopen, 1x Sub-D 9pole, male	RUN	Indicates status with flash sequences according to DR303-3 (CiA)	
		ERR	Indicates status with flash sequences according to DR303-3 (CiA)	
IF-AB-RS232	RS 232, 1x Sub-D 9pole, male, for null modem cable	PWR	Module is powered	
IF-AB-PBUS	Profibus DP-V1 Slave, 1x Sub-D 9pole, female	OP	Operation mode: on (green) = Connection established flashing (green) = Ready flashing (red, 1x) = Parameter error flashing (red, 2x) = Profibus error	
		ST	Status off = Not initialised on (green) = Initialised flashing (green) = Extended diagnosis on (red) = Exception error	
IF-AB-ETH1P	Ethernet, 1x RJ45	NS	Network status: flashing (green) = default, can be ignored on (red) = Double IP, fatal error flashing (red) = Connection time-out	
		MS	Module status: flashing (green) = default, can be ignored on (red) = Exception error flashing (red) = Recoverable error	
IF-AB-ETH2P	Ethernet, 2x RJ45			
		LINK	Connection status: on (green) = Connection established flashing (green) = Data traffic	
IF-AB-PNET1P	ProfiNET IO, 1x RJ45	NS	Network status: on (green) = Online with controller in RUN flashing (green) = Controller in STOP	
		MS	Module status: on (green) = Everything OK on (red) = Exception error flashing (red, 1x) = Config error flashing (red, 2x) = IP address not set flashing (red, 3x) = Station name not set flashing (red, 4x) = Internal error	
IF-AB-PNET2P	ProfiNET IO, 2x RJ45			
		LINK	Connection status: on (green) = Connection established flashing (green) = Data traffic	

Module	Type / Connectors	LED indication		Front view
IF-AB-ECT	EtherCAT Slave, 2x RJ45	RUN	Indicates status with flash sequences according to DR303-3 (CiA)	
		ERR	Indicates status with flash sequences according to DR303-3 (CiA)	
IF-AB-MBUS1P	ModBus TCP, 1x RJ45	NS	Network status: on (green) = Module active flashing (green) = Module waiting for connection on (red) = Double IP or fatal error flashing (red) = Process time-out	
		MS	Module status: on (green) = Everything OK on (red) = Primary error flashing (red) = Secondary error	
IF-AB-MBUS2P	ModBus TCP, 2x RJ45			
		LINK	Connection status: on (green) = Connection established flashing (green) = Data traffic	

2.2 Anybus module support

These device series support the in *2.1* listed Anybus modules (date: 10-10-2025):

- ELR 9000 / ELR 9000 HP
- EL 9000 B / EL 9000 B HP / EL 9000 B 2Q
- PSE 9000
- PSI 9000 2U - 24U
- PSB 9000 / PSBE 9000
- all 10000 series

It might be required to install a firmware update for KE" in your device in case the device won't support a specific interface module after installation.

2.3 Before you begin

If you plan to integrate a device into an existing network or field bus with any of these interface installed, notice following:

- All modules, but especially the Ethernet types which provide a web site, require a certain startup time each time the device is powered, which will delay their network readiness. Usually, the interface module is ready for communication as soon as the device is ready for operation.
- The readiness for operation may be indicated by the modules (with one of the LEDs) before the required startup time has run out. If one would try to contact an Ethernet module in order to access the website, the website might not be loaded completely or the browser might stop with a time-out error.

2.4 Installation of an Anybus module

The installation itself is described in the user manual of your device, as well as the required setup. Further information about installation and connection to field buses and networks can be found in publicly available documentation and similar sources.

The CANopen module IF-AB-CANO doesn't feature an internal termination resistor. Thus the required of having a bus termination resistor installed is fulfilled by the user according to the CAN bus requirements.

2.5 Network with linear topology

The Ethernet based modules for standard LAN, ModBus TCP and Profinet/IO are also available in a version with two ports. These provide the possibility to connect multiple devices in a linear topology and even to build a ring (DLR, device level ring) for extended safety against interruption. External switches can be spared and the many long network cables, like when having a star-shaped topology, can be reduced to a minimum.

The EtherCAT module, however, has two ports by default and always builds a ring because of the standard setup within EtherCAT systems. It's also Ethernet based, but can't be considered as LAN port.

2.6 Network access via HTTP

The Ethernet based modules, like for standard LAN, ModBus TCP or Profinet, and the integrated LAN ports as features with some series like PS 9000 from 2014 and PSI 5000 offer a **website**. It's accessible with common browsers (Firefox, Chrome, Safari) by simply entering the IP address or the host name which has been assigned to the device. Accessing the website via the host name (default: Client) is only possible if the network runs a DNS or, when using direct connection, the PC runs a DNS and the domain/host name is already registered.

The default IP is **198.168.0.2**. All network parameters for the device/network interface can be changed or reset to defaults in the setup menu of the device (where featured).

The currently active IP address, along with other network related parameters like gateway, DNS address, subnet mask and MAC address, can also be read from an overview in the setup menu of devices where the series features an on-screen setup menu.

The website gives the user full control over the device by manually typing SCPI commands. It primarily serves for simple testing purposes. In case you want to continuously control a device or at least monitor it, please continue reading in section *„5. SCPI protocol“*.

The website, precisely the second page CONFIGURATION, allows for setting up network specific parameters, like when doing it in the device setup menu, and to write them to the device remotely, requiring prior activation of remote control by command SYST:LOCK ON.

2.7 Network access via TCP

All Anybus network modules, as well as the integrated LAN port of select series offer standard TCP access via the default port **5025** (user-selectable, see device operating guide for setup menu or similar). TCP data transfer is used for the external communication via **ModBus RTU** or **SCPI**. For **ModBus TCP** protocol, port **502** is reserved and exclusive.

The default port and other network related parameters can either be adjusted in the device's setup menu (if featured) or from outside via USB or on the website (see *2.6*).

TCP/IP socket connection (IP:port) is intended for normal remote control access to the device when using an Ethernet interface.

!	*The TCP connection can be automatically disconnected by the device after a certain time without data transmission has elapsed. This is due to an adjustable timeout (default: 5 s). There is also another related option called "TCP keep-alive" which, if activated, deactivates the timeout temporarily, unless "TCP keep-alive" isn't functioning within the network. From a specific firmware version on (see firmware history of your particular device) it also supports to completely turn off the connection timeout.*

3. Introduction

3.1 Access to the device

After connecting the device via a digital interface to a PC, it's usually ready for access. Access can happen in several ways:

- Via a control and monitoring software supplied by the device manufacturer
- Via LabView VIs, supplied by the device manufacturer
- Via a custom programmed application which is usually created by the user
- Via other software, like a terminal program that can send text messages (SCPI) or hexadecimal bytes (ModBus)
- Via internationally standardized software for CAN, CANopen, Profibus or EtherCAT etc.

3.2 Control locations

Control locations are those locations from where a device is accessed. There are basically two: direct access (manual control) and external access (remote control). The user can switch between control locations just as the situation requires.

Following control locations are defined for a device:

Control location as displayed on the device	Description
Nothing or **Remote: None**	If there is no specific control location indicated, the device is free for external access and all interface for remote control are enabled
Remote: Analog, Remote: USB etc.	Remote control is active
Remote	Remote control is active via any interface (PS 5000 / PSI 5000 only)
Local	Remote control is blocked, the device can only be controlled manually

Digital remote control always requires to be activated by a specific command sent to the device. It can't be activated on the device, only allowed or forbidden, and doesn't automatically activate when sending any first command.

Certain device series offer a feature to interrupt or to block remote control of the device completely. This is a setting named **Allow remote control** or similar. In blocked state, the device will indicate **Local** in the display. Activating this block may be required in an emergency situation where a software permanently controls the device from remote and thus may prevent user interaction. With this, the user can temporarily interrupt remote control in order to access the device for switching the DC input/output off or changing a setting.

Activating **Local** condition will cause following:

- In case remote control via one of the digital interfaces is currently active (**Remote: Ethernet** etc.), remote control will be deactivated and can be activated again later, once the **Local** condition has been deactivated again.
- In case remote control via analog interface is currently active (**Remote: Analog**), then the remote control is only interrupted as long as condition **Local** is active and returns automatically as soon as **Local** is deactivated, because the analog interface has a steady signal on pin REMOTE, which permanently defines “remote on” unless the plug on the analog interface has been removed.

3.3 Message timing and command execution time

The timing of communication, more precisely the control over the chronological run of two subsequent messages, isn't done by device and lies in the responsibility of the user.

Rule of thumb: the device can not process incoming messages as fast they can be technically transferred by the hardware of the used interface and its specifications. Thus it's important to time communication and wait a certain time before the next command is sent, no matter what interface is used. This doesn’t include protocol related data traffic, like it occurs for example between a Profibus slave and its Profibus master, because this traffic is handled by the interface itself, not by the device.

It also applies:

- Queries to the devices, i.e. commands that read something, are executed faster and may be sent more often and in shorter intervals
- Write commands, i.e. commands that set a value or a status, are not immediately executed when received and the delay before execution varies

3.3.1 Execution time when writing

Due to different internal design of the series, different types of microcontrollers, which control the hardware and besides do communication with the PC, and also different firmwares the time for processing a set value or status command varies. It means, there is no fixed time between setting a value and the corresponding reaction on the DC output/input, only a typical one.

3.3.2 Response time when reading

Reading something from a device is usually responded immediately, with a certain response time. There are generally two methods of communicating with a port:

1) Open port -> write query to port -> read response from port -> close port

2) Open port -> write query to port -> read response from port -> repeat write/read x times -> close port

Both methods have advantages and disadvantages. The primary advantage of method 2 over method 1 is that writing and reading can result in an even faster response time. The primary advantage of method 1 over method 2 is that closing the port also closes the connection which can make communication more stable, especially if the time between two write-read cycles is very long. With Ethernet based connections, however, it opening and closing the sockets can have a unwanted side effect of too many local ports being occupied at the same time.

The values in the table below have been acquired using method 2.

The response time of both, USB and Ethernet, may vary depending on the KE firmware version installed on your device and can be longer than listed here. The times given below are valid for the KE firmware versions listed in section 1.1.2.

The reponse times below include the transmission of any data between the device and the controlling unit. For interfaces with a variable baud rate (CAN, CANopen) they are only valid for the highest baud rate setting.

		Typical response times (RS232 excluded)		
Series	**Protocol**	**USB**	**Ethernet based**	**CAN/CANopen Profibus**
PS 2000 B TFT	SCPI	<5 ms	-	-
	ModBus	<5 ms	-	-
EL 3000 B EL 9000 B HP & 2Q EL 9000 DT ELR 5000 ELR 9000 ELR 10000 PS 3000 C PS 5000 PS 9000 (all series since 2014) PSB 9000 / PSBE 9000 PSB 10000 / PSBE 10000 PSE 9000 PSI 5000 PSI 9000 (all series since 2014) PS 10000 / PSI 10000	SCPI	<5 ms	<5 ms	-
	ModBus (1	<5 ms	<5 ms	<3 ms

(1 Includes derived formats with CAN, CANopen, Profinet etc.

3.3.3 Timing of messages

The minimum time between two messages, as listed below, primarily depends on the typical response time as listed in *3.3.2*.

Series	Minimum time between two messages	Recommended time between two messages
PS 2000 B TFT	USB: 5 ms	USB: 10-15 ms
EL 3000 B EL 9000 B HP & 2Q EL 9000 DT ELR 5000 ELR 9000 ELR 10000 PS 3000 C PS 5000 PS 9000 (all series since 2014) PSB 9000 / PSBE 9000 PSB 10000 / PSBE 10000 PSE 9000 PSI 5000 PSI 9000 (all series since 2014) PS 10000 / PSI 10000	USB / CAN / CANopen: 5 ms Ethernet: 5 ms EtherCAT: 5 ms Profibus / Profinet: 5 ms	USB / CAN / CANopen: 10-15 ms Ethernet: 10 ms EtherCAT: 10 ms Profibus / Profinet: 10 ms

3.4 Overview of the communication protocols

Except for series PS 5000, all below listed device series support two protocols: **ModBus** and **SCPI**. Basically, both can be used via RS232, USB and most of the Ethernet based interfaces. Exceptions are those related to dedicated standards, such as CAN, CANopen, Profibus, Profinet or EtherCAT.

When using an Ethernet port with ModBus protocol it requires an additional distinction between ModBus RTU and ModBus TCP. Some series with a rigidly installed Ethernet port also support the **ModBus TCP frame** since a specific firmware version. It means the support for ModBus TCP can be installed with a firmware update.

Over Ethernet, the ModBus TCP reserved port 502 only supports ModBus TCP frames, while all other ports would only support frames with a ModBus RTU ("ModBus RTU over Ethernet") or SCPI message.

With option 3W (GPIB+USB+Analog) installed, as it's optionally available since Q3/2014 for select series, only SCPI can be used via GPIB. With USB, ModBus RTU is additionally supported.

Which device series basically support what protocol(s)?

	ModBus		SCPI
Series	**RTU**	**TCP**	
EL 3000 B / PS 3000 C	✓	from firmware KE 2.04	✓
EL 9000 B / HP / 2Q	✓	✓	✓
EL 9000 DT / T	✓	not supported	✓
ELR 5000	✓	not supported	✓
ELR 9000 / ELR 9000 HP	✓	✓	✓
PS 2000 B TFT (only color display)	✓	not supported	✓
PS 5000	✓	not supported	not supported
PS 9000 1U	✓	not supported	✓
PS 9000 2U / 3U	✓	✓	✓
PSB 9000 / PSBE 9000	✓	✓	✓
PSE 9000	✓	✓	✓
PSI 5000	✓	✓	✓
PSI 9000 2U - 24U	✓	✓	✓
PSI 9000 DT / T	✓	from firmware KE 3.05	✓
All 10000s series	✓	✓	✓

Special fact: **SCPI** and **ModBus** can be used via USB or Ethernet arbitrarily. The device distinguishes them by the first byte of a message, which **has to be 0x00 or 0x01 for ModBus RTU**.

Depending on the selection of the interface and the protocol you are going to use, a different part of this documentation will be relevant. Users with a device supporting the optional interfaces modules (see section *2.2*) have a wider selection. The table below list which Anybus module supports what protocol:

Interface	ModBus?	SCPI?	Other protocol
CAN	no	no	yes (see *„8. CAN“*)
CANopen	no	no	CANopen (see *„7. CANopen“*)
RS232	yes (see *„4. The ModBus protocol“*)	yes (see *„5. SCPI protocol“*)	no
Profibus	no	no	Profibus (see *„6. Profibus & Profinet“*)
Ethernet	yes, ModBus RTU (see *„4. The ModBus protocol“*)	yes (see *„5. SCPI protocol“*)	no
ProfiNet	no	no	Profinet (see *„6. Profibus & Profinet“*)
ModBus TCP	yes, ModBus TCP (see *„4.5.5. ModBus TCP“*)	yes (see *„5. SCPI protocol“*)	ModBus RTU (see *„4. The ModBus protocol“*)
EtherCAT	no	no	EtherCAT (see *„9. EtherCAT“*)

3.5 Special characteristics of remote control

When using remote control via digital interface, some things have to be taken into account:

- Configuration or control of the function generator (where available) requires a certain procedure. This is described in *4.11.8* for ModBus or *5.4.12* for SCPI. The described procedure for ModBus basically also applies to the use of any other interface like CAN, CANopen, EtherCAT etc.
- Some ModBus registers or SCPI commands are intended for the setup of the device exactly like when doing it manually in the device setup menu (where featured). Those registers/commands are not particularly grouped or marked with colours and should only be used to switch between configurations of the device.
- The adjustment limits („Limits“, where available, see device manual), as adjustable in the device’s setup menu, limit related set values from every control location, i.e. also in remote control via digital interface. This can lead to unexpected communication errors coming from the device when a value is too high/low. With SCPI language being used, these errors are not even returned automatically, because it's typical with SCPI to receive error messages only upon request. In order to be sure whether a set value has been accepted by the device or not, reading the set value is the only way.

3.6 Fragmented messages on serial transmissions

With RS232, Ethernet or even with USB it's possible, that the device receives fragmented messages. It means, a command is received in pieces together with a certain time gap and then interpreted by the device as multiple, but single and corrupt commands. Primarily SCPI commands are affected, because they are strings consisting of ASCII characters and don't have a checksum. Those strings could be sent by a serial interface character by character or as one single block, depending on the situation on the control side (PC). If a certain timeout elapses between to consecutive bytes, the message is considered as "completely received" by the device, due to the lack of a termination character, which isn't generally required for ModBus or SCPI.

Since a certain firmware version a variable USB timeout has been implemented, which can be configure manually on the device (except for PS/PSI 5000) or via remote control, for example via SCPI (see section *5.4.11*). If the communication between PC and device has a lot of communication errors due to possibly fragmented messages, the timeout should be increased step by step to eliminate the problem. It's advised to keep the timeout setting as low as possible, because at the end of every message the timeout has to elapse before the device can process the command.

When using SCPI, sending an additional termination character (typical LF, CR, or CRLF), which isn't always required but accepted, will terminate the timeout immediately and let the device consider the message as completely received.

3.7 Connection timeout

Socket connection to devices which support an Ethernet port have a connection timeout. This variable and user-adjustable timeout (see user manual of the device) closes the socket connection automatically on the device side if there was no communication going on between device and controlling unit (PC, PLC etc.) for the adjusted time. After the socket has been closed, connection can be established again anytime. The timeout becomes automatically ineffective, if the so-called "TCP keep-alive" (available since a specific KE firmware version) is activated and supported in the network. Since a specific firmware version (see firmware history) it's even possible to completely turn off that timeout.

3.8 Effective resolution when programming

All values related to voltage, current, power and resistance, that can be transferred to the device and which are forwarded via the power stages to the DC input/output of the device, have the same defined programmable resolution and also an effective resolution. While the **programmable resolution** of a value is the same for every series (0-100 % = 0 - 0xCCCC = **0 - 52428**), even when using SCPI, the **effective resolution** depends on the ADC/DAC used in the hardware and isn't the same in all series. See the table below.

The effective resolution determines the achievable step width on the DC output/input. It calculates as *step width = rated value ÷ effective resolution*. E. g., for the power supply PSI 9080-510 3U the step width of voltage would then be 80 V / 26214 = approx. 3 mV. For the current it would be 510 A / 26214 = approx. 19 mA.

However, tolerances add to the result when setting a value. The PSI 9080-510 3U from the example above has a voltage tolerance of max. 0.1%, as stated in the user manual. This is up to 80 mV. When setting, for example, 24 V the true output voltage is allowed to be within a range of 23.92 V to 24.08 V. If you would measure the actual output voltage with an external multimeter and it would read 24.03 V and you would want to it have closer to the desired 24 V, the software could adjust the set value in approx. 3 mV steps to further approach the actual value to the set value.

Series	ADC/DAC [1]	Effective resolution
EL 3000 B	12 Bit	4096
EL 9000 B 3U-24U / EL 9000 B HP / EL 9000 B 2Q	16 Bit	26214
EL 9000 DT	16 Bit	26214
EL 9000 T	14 Bit	16384
ELR 5000	16 Bit	26214
ELR 9000 / ELR 9000 HP	16 Bit	26214
PS 2000 B TFT	12/32 Bit	4096/26214
PS 5000 / PSI 5000	16 Bit	26214
PSB 9000 / PSBE 9000 / PSE 9000 / PSI 9000 2U - 24U / PSI 9000 DT	16 Bit	26214
PS 9000 T / PSI 9000 T	14 Bit	16384
PS 3000 C	12 Bit	4096
All 10000s series	16 Bit	26214

3.9 Minimum ramp slope (arbitrary function generator)

This section is only valid for series featuring a function generator, such as:

- EL 9000 B / EL 9000 B HP / EL 9000 B 2Q / EL 9000 DT/ EL 9000 T
- ELR 9000 / ELR 9000 HP / ELR 10000
- PSI 9000 2U - 24U / PSI 10000
- PSI 9000 DT / PSI 9000 T
- PSB 9000 / PSB 10000

10000s series users, please read:
With the release of firmwares KE 3.02 and DR 1.0.2.20 for all 10000s series the requirement for a minimum slope for ramps generated by the internal arbitrary function generator has been completely removed. The previous time limit of 1379 seconds for a ramp has also been removed. It means, this section isn't valid anymore for a device with this minimum set of installed firmwares. Should you want to use these firmware for your device, you may either simply install them, in case your device is eligible for this update (the Update app in our control software manages that), or contact us for details about how to install these firmwares.

When programming the so-called arbitrary generator (also see user manual of the device for details), no matter what digital interface is used, the device may return errors related to the values in the so-called sequence points. Besides obvious errors like "value out of range" there is also a **minimum slope** to respect.

According to the description of the arbitrary generator in the device manual, all sequence points have an AC part, which is only used to generate sine waves, and a DC part with a start and value. When start and end value are different, a slope is generated. This is natural in the functions for ramp, triangle and trapezoid.

That slope (ΔU/t or ΔI/t) **must fulfil a specific minimum value.** In order to check if a certain rise/fall over time is feasible, the minimum slope should be calculated from the rated values of your particular device.

Formula: **min. slope = (0.000725 * rated voltage or current) per second**

In relation to the parameters you set up for a sequence point, the device calculates the slope from the start value of the DC part, end value of the DC part and the sequence time and compares it to the min. slope.

Example: the target device is an electronic load with 500 V and 30 A rating. A rising ramp on the current shall be generated. The min. slope calculates as: ΔI/t = 0.000725 * 30 A = 21.75 mA/s. If you wanted to do ramp of 0-20 A in 5 s, the slop would be 4 A/s, which is valid. However, the same 0-20 A over 20 minutes aren't possible and would be refused by the device.

The max. time for a certain ΔU or ΔI can be calculated: **t_{Max} = ΔU or ΔI ÷ min. slope**.

For the above example with 0-20 A we get a t_{Max} = 20 A / 0,02175 A/s = approx. 919 seconds.

Conclusion: long-time ramps over many minutes or even hours can't be achieved using the function generator, but by using an alternative method, which is achieved by setting a certain number of current steps over time using a PC software.

Here the effective resolution (see *3.8*) comes into play. The electronic load from the example above could be an ELR 9500-30 with a programmable resolution of 52428 steps and an effective resolution of 26214 steps. In order to have it realistic, let's focus the 26214. It represents 0-100% = 0-30 A when working on the current.

For 0-20 A it would then be 17476 steps. If you wanted to generate the 0-20 A ramp over 10 hours, you could set a new value every 10 h / 17476 = ≈2 seconds, while the value increases with every step by 20 A / 17476 = approx. 1.15 mA. This is a very fine step width and heavily impacted by device tolerances. Thus it's probably more reasonable to enlarge the period, for example to an increment of 11.5 mA every 20 s or 34 mA every minute. Using a constant period will result in a ramp with stairs of constant width and a more or less small height of 1.15 mA to 34 mA or different, just as you set it up.

3.9.1 Minimum frequency slope (arbitrary function generator)

The function generator featured in the 9000s and 10000s series, which can also generate DC sine waves, has another limit when working with a frequency sweep, i. e. when the start and end frequency of the desired wave aren't equal. The minimum required slope Δf/s (delta frequency per second) is 9.3, as also mentioned in the device user manual in the section for the arbitrary generator, and can't be bypassed. When writing sequence point data which would result in a wrong minimum of that slope, the device would either directly return an error when using ModBus or, when using SCPI, upon request. The SCPI error would be -222.

When, for instance, wanting to achieve a sweep from 1 Hz to 10 Hz, the question is: How much time does the generator need until the sine wave reaches 10 Hz? This time is calculated by the control software. The angle on the end of the resulting wave might then not necessarily be the same as at the start. Formula:

ModBus: t (µs) = |end frequency - start frequency| / 9.3 * 1000000 -> because the time value here is given in µs

SCPI: t (s) = |end frequency - start frequency| / 9.3 -> because the time values here is given in seconds

For a wave from 1 Hz to 10 Hz, the time value would calculated as 967,741 µs or 0.9677 s. When setting this exact value, running the generator and recording the entire wave on an oscilloscope, the last full sine wave will have a period that equals 10 Hz.

3.10 Special situations

When remotely controlling and supervising a device or a system of devices, special situations are those which are not regular, usually unexpected, but may also be expected, and which need an extra handling.

3.10.1 Alarm "Power fail"

The power fail alarm (short PF, see user manual of the device for more details) is one of a few device alarms which shut down the DC output/input. In this case usually due to a short-term power outage or an AC supply fluctuation. After the PF alarm has gone, the device and thus the control unit cannot immediately continue to operate as before, the control unit needs to wait some extra time.

Unfortunately, this required waiting time isn't equal with all series and there is also no signal like "now you may continue". The waiting time also only starts with the PF alarm being gone already.

Most series, such as the 9000s and 10000s, have a PF related setting called "DC output after PF alarm" (or similarly named) which, if set to "Auto", let's the device automatically switch DC back on after the waiting time, so the control unit could poll the DC status to learn when the remote control can continue. Should this automatic feature not be in use, the control unit has to a) clear the PF alarm and b) wait another 2 seconds before it can switch DC on again.

With date 05/2022, that waiting time after PF and before clearing PF is defines as approx. 12 seconds with all 10000s series.

4. The ModBus protocol

Important, please read! Also users who are already familiar with the devices:

With the release of certain KE firmware versions in 2020 there has been a modification to make our devices fully compliant to the ModBus specification. In order to remain compatible to already existing softwares on the control side (PC, PLC etc.) the compliance can be switched with register 10013 between "Full" and "Limited" (default), whereas "Limited" is the condition of the previous firmwares, so there is no unexpected impact after an update. Differences:

- *"Full" supports slave addresses 0 and 1 and returns READ COIL functions correctly*
- *"Limited" only supports address 0, so activating mode "Full" requires to send the message to address 0*

General things about mode "Full":

- *After switching to mode "Full" messages are returned with the address used in the send/read command, either 0 or 1*
- *The mode selected via register 10013 is permanently saved*
- *READ COILS is only returned in compliant format*
- *Send/read commands to address 0 will be responded with address 0, though this is unexpected. The ModBus specification only rules this for a serial line communication system which isn't used for our devices.*

4.1 General information about ModBus RTU

A telegram, as defined by the ModBus RTU protocol specification, consists of hexadecimal bytes of which the first byte, the ModBus (slave) address, can only be 0 or 1 because our devices don't need an adjustable address. The 1 is furthermore only accepted by the device if compliance mode "Full" has been activated. If not, it only supports address 0 to maintain compatibility to older firmwares, where 0 only had to be used. The first byte of a telegram is used to distinguish the communication between ModBus and SCPI. A value between 2 and 41 in the first byte will cause a ModBus communication error, whereas from 42 (ASCII character: *) the telegram is considered as text message, means as an SCPI command.

Format and length of a ModBus telegram are defined. The telegram has to be transmitted according to the specifications of the particular interface that is used. Normally, the user only has to take care for a correct message, rather than correct transmission. But there are also interfaces, like for example RS232, which don't feature communication safety and don't guarantee flawless transmission. Other interfaces support flawless transmission by using a checksum and/or software handshaking.

4.2 General information about ModBus TCP

The message format according to the ModBus TCP specification is supported by the Anybus interface modules **ModBus TCP 1 Port** and **2 Port** (see section *2.2* for details), as well as by many device series with rigidly installed Ethernet port and from a specific firmware version. In both cases the default ModBus TCP port **502** has to be used.

Port 502 is reserved for ModBus TCP and thus blocked for "normal" Ethernet interface modules. The ModBus TCP interface modules, as well as the built-in LAN port of some series offer two sockets, the reserved port 502 and the adjustable port with default value 5025. It means that port 502 is automatically present and doesn't have to be set up.

By definition, a ModBus TCP message requires an additional header, compared to ModBus RTU. This makes it impossible to use SCPI via this port. The rest of the message is identical to ModBus RTU, except for the not required checksum. The below sections are related to the core part of ModBus messages, which is identical for both, RTU and TCP. Further ModBus TCP related information can be found in *„4.9. ModBus TCP in detail“*.

4.3 Format of set values and resolution

Set values, as transmitted via digital interfaces, are always per cent values of the device's nominal values (U, I, P, R) and correspond at 100% to the hexadecimal value 0xCCCC (decimal: 52428). The total usable range is 0%...102% (0x0000...0xD0E5). The register lists for a particular series defines the range for all settable values.

It means, you can set a per cent value between 0% and 100% by sending hexadecimal values of 0x0000-0xCCCC or for supervision thresholds of device alarms like OVP it will be 0x0000-0xE147 for 0% to 110% or with some series 0x0000-0xD2F1 for 0 to 103%.

This means 52429 possible values for 0-100%. This is internally halved (the MSB is reserved for sign), **so the effective resolution between 0 an 100% results in 26214 steps** or less. Regarding the topic "resolution" also see section *„3.8. Effective resolution when programming“*.

4.4 Translating set values and actual values

Real values have to be translated to per cent values before transmitting them to the device, as well as per cent values read from the device are usually translated into real values in order to process them further. It always applies: 0xCCCC (hexadecimal) = 52428 (decimal) = 100% nominal value.

Translation is done by implementing these formulas into custom software:

Per cent value to real value	Real value to per cent value
$\text{Real value} = \frac{\text{Rated value} * \text{per cent value}}{52428}$	$\text{Per cent value} = \frac{52428 * \text{real value}}{\text{Rated value}}$
Example: The nominal voltage of your device is 80 V and actual voltage was read as 0x2454 (decimal: 9300). According to the formula above, the real actual value will be (80 * 9300) / 52428 = 14,19 V.	Example: the power set value shall be 3150 W, the power rating of your device is 3500 W. According to the formula above we get a power set value of (52428 * 3150) / 3500 = 47185 = 0xB851.

All set values are not only limited by the device's nominal values, but can also be limited by the adjustable "Limits" (where available)! Values exceeding the minimum or maximum of the adjusted range are rejected by the device.

When translating real values into per cent values (decimal or hexadecimal), it's often required to round up or down. We recommend to round naturally. Note that natural rounding can result in a translation value which is by 1 higher than expected.

4.5 Communication with the device via AnyBus modules

4.5.1 Ethernet

Continue to read in section *4.7*.

4.5.2 Profinet / Profibus

The Profinet/IO module (1 or 2 ports) can be used to control and monitor a device using a network system, usually combined with an integrated PLC and proper software. For Profinet, the software selects the necessary Ethernet port, because this port can not be adjusted on the device. The standard Profinet communication is different and is handled by the field bus protocol via special software. The implementation of the device into Profinet or Profibus is described in section *„6. Profibus & Profinet"*. Continue to read in section *4.7*.

4.5.3 CANopen

Continue to read in section *4.7*. Also refer to section *„7. CANopen"*

4.5.4 CAN

Continue to read in section *4.7*. Also refer to section *„8. CAN".*

4.5.5 ModBus TCP

The protocol used here is standard ModBus in a ModBus TCP frame. TCP/IP transmission isn't explained herein. Continue to read in section *4.7*, plus also *„4.9. ModBus TCP in detail"*.

4.5.6 EtherCAT

EtherCAT uses proprietary software and usually CANopen over Ethernet (CoE) protocol. Continue to read in section *4.7*. Also refer to sections *„7. CANopen"* and *„9. EtherCAT"*.

4.5.7 RS232

The RS232 module supports a variable baud rate, but the remaining serial settings are fixed:

Data bits: 8
Stop bits: 1
Parity: none

Continue to read in section *4.7*.

4.6 Communication USB port (COM)

After connecting the device via USB cable and successful USB driver installation, the device is ready for access. The COM port, which is assigned to the new USB device (see Windows device manager) doesn't need configuration. It's based upon a so-called CDC driver (Communication Device Class), which is available for Windows 7 (also Embedded), 10 and most likely 11, as well as for other operating systems, too. This driver generates the COM port for simplicity and can run data transmissions as fast as the USB 2.0 port on the device can handle it. The typical serial settings are here effective and ignored by the driver which also means they're not required to be set specifically.

4.6.1 USB driver installation

The USB driver for the rear or front side type B port is included with the device on USB stick as installer. It installs a signed driver for virtual COM ports on 32 bit or 64 bit Windows operating systems since Windows 7. Alternatively it's available as download from the website of the device manufacturer. For Embedded OS versions of Windows the USB stick contains INF files.

4.6.2 First steps

In order to communicate with the device, it actually only requires a software on the PC side which is able to open a COM port and send messages in either binary format (ModBus protocol) or as ASCII strings (SCPI). For the latter one, simple terminal softwares suffice, at least those which can send the complete command at once. For binary telegrams in hexadecimal format other tools are required, like Docklight (www.docklight.de). The device manufacturer can provide ready-to-use example project files for Docklight upon request. Those can help for a start and to see how the communication works or if it works at all. The project files contain a few basic messages in form of macros which can be sent by the click of a button.

To finally establish communication and access the device via USB, you need to...

1. connect the device via USB.
2. install the USB driver (see *4.6.1*).
3. run a terminal or similar program.

4.7 About the register lists

Along with this programming guide, there are so-called register lists (usually one for each device series) included as PDF files. These lists give an overview about the remote programming features that are available for a certain device series when using binary communication protocols like ModBus, for which the lists are primarily made. Apart from that, they are also a substantial reference when controlling a device via a **field bus** (CAN, CANopen, Profibus, Profinet, EtherCAT) or accessing it in programming environments like **LabView** or MatLab, for example when trying to interpret values or to understand the function of a certain command.

The lists explain in compact format how the data in a binary message has to be interpreted or how a register (with CANopen or EtherCAT it's called "index") is specified. This will help the user to implement the device communication into custom software applications. Users who decide to work with SCPI command language usually don't need those lists. Later in this document, the SCPI commands are referenced in a separate chapter.

4.7.1 Columns "ModBus address"

This number, given in decimal and hexadecimal form, is the so-called ModBus register address or register number. It's used 1:1 and in hexadecimal form in ModBus messages.

4.7.2 Columns "Function"

The heads of the 5 columns contain the names and codes of the supported ModBus functions. An "x" in these columns marks the assignment of a register to any of the functions. For example, the so-called coil registers are usually writable and readable, so they're assigned to functions "Read Coils (0x01)" and "Write Single Coil (0x05)".

4.7.3 Column "Data type"

Data type	Length	
char	1 Byte	Single byte, used for strings
uint(8)	1 Byte	Single unsigned byte
uint(16)	2 Bytes	Double byte, also called word or unsigned 16bit integer
uint(32)	4 Bytes	Double word, also called long or unsigned 32bit integer
float	4 Bytes	Floating point value according to IEEE745 standard

4.7.4 Column "Access"

This column defines for every register whether the access is read only, write only or read/write.

R = Register is read only

W = Register is write only or wouldn't return a reasonable value when read from

RW = Register can be read or written

> *It applies generally: Writing to a register which allows write access (W, RW) is only possible during remote control!*

4.7.5 Column "Number of registers"

With ModBus, a register always has a length of 2 bytes or a multiple of 2 bytes. This column tells how many 2-byte values are used by the register. The value is always the half of the value in column “Data length in bytes”.

4.7.6 Column "Data"

This column tells additional information about the data which can be written to or read from the register. Two, four or more bytes can be interpreted in different ways, depending on data type.

4.7.7 Columns "Profibus slot/Profinet subslot" & "Profinet index"

These columns are only available in register lists for those series which support the optionally available Anybus interface modules, here in particular the Profibus and Profinet interfaces.

The columns are used by Profibus/Profinet users to link the registers in the list via the two values „slot” or „subslot” and also "index" to data blocks (SFBs) in the PLC software. For more details refer to *„6. Profibus & Profinet“*.

4.7.8 Column "EtherCAT SDO/PDO?"

This column is only available in register lists for those series which support the optionally available Anybus interface modules, here in particular the EtherCAT interface.

The column marks which of the ModBus registers supported by the device can be accessed via EtherCAT's CANopen over Ethernet (CoE) protocol in form of indexes. Some of the marked registers are used in the PDO while all marked registers are accessible as SDOs. Devices supporting the EtherCAT interface contain a downloadable data object list. Which of the registers linked to the PDO is described in section *„9. EtherCAT“*.

4.8 ModBus RTU in detail

This protocol can be used with via built-in USB interface (where available), the built-in Ethernet port (select series) and also with some of the optionally available AnyBus modules. The addressed object when using ModBus protocol is called register. This document uses the terms **address**, **register** or **register address**.

> *When transferring ModBus RTU messages via any Ethernet interface it's called "ModBus RTU over Ethernet", which isn't the same as "ModBus TCP". ModBus TCP frames are additionally supported via the built-in LAN port of some series, but only from a specific firmware version. For more details refer to section 3.4.*

4.8.1 Message types

Basically, the message system distinguishes between **query messages**, **control messages** and **response messages**. Query messages will cause the device to send a response message, while control messages only cause it to reply with a 1:1 echo, in order to confirm reception.

4.8.2 Functions

The second byte of a message contains a ModBus **function** code (**FC**, marked blue below), which determines whether the message is a READ or WRITE message. It also determines, whether one or multiple registers are accessed. The protocol, as described below, supports with date 10-10-2025 following ModBus functions :

Function		Function name		Description	Example of use
Hex	**Dec**	**Long**	**Short**		
0x01	1	READ Coils	RC	Only allows to read 1 coil, because in our device series the coils are not organized incrementally. Earlier firmwares would always return 16 bits, ergo multiple coils, which was different from the ModBus specification, while only representing a boolean TRUE with 0xFF00 or FALSE with 0x0000. Also mind the note box in section *4.*	Query the input / output condition
0x03	3	READ Holding Registers	RHR	Used to read n subsequent registers. Results in n*2 bytes of data in the response message. Reading beyond a group of register is only possible is the next group is daefined to have the same data type.	Read the model name string (1-40 bytes)
0x05	5	WRITE Single Coil	WSC	Used to write the coil (TRUE/FALSE) of a boolean register	Switch device to remote control.
0x06	6	WRITE Single Register	WSR	Used to write one register.	Set values (U, I, P etc.)
0x10	16	WRITE Multiple Registers	WMR	Used to write n subsequent registers. Can't be used to write beyond the limits of a register block, for example when trying to write multiple set values (U, I, P) at once.	Write multiple values at once within a register block or write the so-called user text

> *The register list defines which of the above functions may be used with every register.*

> *The bytes in a ModBus message are read from left to right (big endian format), except for the 16 bit ModBus RTU checksum where low byte and high byte are switched.*

4.8.3 Control messages (write)

The device checks the message only regarding the max. length of the register. After the data part, the checksum is expected. So in case the data part would only contain the minimum two bytes and thus the message would fulfil the protocol requirements for the selected function code, the checksum would be expected at the position of the 7th byte. If there were further data bytes at that position or zeros and the checksum would be at a different position in the message, the device would return an error. Hence the device will return an error, no matter if the telegram is too short or too long, because the checksum is wrong. For message examples see *„4.8.7. Examples of ModBus RTU messages“.*

WRITE Single Register

Byte 0	Byte 1	Bytes 2+3	Bytes 4+5	Bytes 6+7
Head	FC	Start reg.	Data word	CRC
0x01	0x06	0...65535	Value to write	Checksum ModBus-CRC16 [1]

WRITE Multiple Registers

Byte 0	Byte 1	Bytes 2+3	Bytes 4+5	Byte 6	Bytes 7-253	Last 2 Bytes
Head	FC	Start reg.	Number	Count	Data bytes	CRC
0x01	0x10	0...65535	0...123	Number*2	Data	Checksum ModBus-CRC16 [1]

WRITE Single Coil

Byte 0	Byte 1	Bytes 2+3	Bytes 4+5	Bytes 6+7
Head	FC	Register	Data word	CRC
0x01	0x05	0...65535	0x0000 (FALSE) or 0xFF00 (TRUE)	Checksum ModBus-CRC16 [1]

4.8.4 Query message

When querying something from the device, the response is expected to be immediately and will be of varying length, but always of the same construction. For the query, the start register and the number of registers or coils to read are required. The base of the ModBus data format is a register, a 16 bit integer value, means a group of two bytes. Thus, when querying one register with function READ Holding Registers, the device will return two bytes and when querying two registers it returns 4 bytes etc. With READ Coils, the response will be one byte (=1 coil) or two bytes (=16 coils, former response in earlier firmwares).

For message examples see *„4.8.7. Examples of ModBus RTU messages“.*

READ Holding Registers

Byte 0	Byte 1	Bytes 2+3	Bytes 4+5	Last 2 Bytes
Head	FC	Start reg.	Number	CRC
0x01	0x03	0...65535	Number of regs to read (1...125)	Checksum ModBus-CRC16 [1]

READ Coils

Byte 0	Byte 1	Bytes 2+3	Bytes 4+5	Last 2 Bytes
Head	FC	Start reg.	Number	CRC
0x01	0x01	0...65535	Must always be 1	Checksum ModBus-CRC16 [1]

[1] See *„4.8.6. The ModBus checksum“*

4.8.5 Response message (read)

A response from the device is usually expected after a query or if something has been set and the device confirms the execution.

Expected response for WRITE Single Register:

Byte 0	Byte 1	Bytes 2+3	Bytes 4+5	Last 2 Bytes
Head	FC	Start reg.	Data	CRC
0x01	0x06	0...65535	Written value echoed	Checksum ModBus-CRC16 (1

Expected response for WRITE Single Coil:

Byte 0	Byte 1	Bytes 2+3	Bytes 4+5	Last 2 Bytes
Head	FC	Start reg.	Data	CRC
0x01	0x05	0...65535	Written value echoed	Checksum ModBus-CRC16 (1

Expected response for WRITE Multiple Registers:

Byte 0	Byte 1	Bytes 2+3	Bytes 4+5	Bytes 6+7
Head	FC	Start reg.	Data	CRC
0x01	0x10	0...65535	Number of written registers	Checksum ModBus-CRC16 (1

Expected response for READ Holding Registers:

Byte 0	Byte 1	Byte 2	Bytes 3-252	Last 2 Bytes
Head	FC	Data length in bytes	Data	CRC
0x01	0x03	2...250	Queried registers content	Checksum ModBus-CRC16 (1

Attention! Mind the note box in section „4. The ModBus protocol“ and the information therein.

Expected response for READ Coils (old format, compliance setting "Limited", default):

Byte 0	Byte 1	Byte 2	Bytes 3+4	Last 2 Bytes
Head	FC	Data length in bytes	Data	CRC
0x01	0x01	2	0xFF00 or 0x0000	Checksum ModBus-CRC16 (1

Expected response for READ Coils (new format, compliance setting "Full"):

Byte 0	Byte 1	Byte 2	Byte 3	Last 2 Bytes
Head	FC	Data length in bytes	Data	CRC
0x01	0x01	1	0x00 or 0x01	Checksum ModBus-CRC16 (1

Unexpected response (communication error):

Byte 0	Byte 1	Byte 2	Last 2 Bytes
Head	FC		CRC
0x01	0x80 + Function code	Error code	Checksum ModBus-CRC16 (1

A communication error can have several reasons, like a wrong checksum or when attempting to switch a device to remote control that has been set to “Local” or if it's already remotely controlled by another interface. See the communication error code list in „4.10. ModBus communication errors“.

4.8.6 The ModBus checksum

The checksum at the end of ModBus RTU messages is a 16 bit checksum, but isn't calculated as the usual CRC16 checksum. Furthermore, **the byte order** of the checksum in the message is **reversed**. Information about ModBus CRC16 and source code for implementation and calculation are available on the Internet, for example here:

http://www.modbus.org/docs/Modbus_over_serial_line_V1_02.pdf , section 2.5.1.2.

(1 See *„4.8.6. The ModBus checksum“*

4.8.7 Examples of ModBus RTU messages

The payload of these examples can also be used with ModBus TCP.

4.8.7.1 Writing a set value

Set values are adjustable limits for the physical values Current, Voltage, Power and Resistance (where available). The can only be written to a device, if it has been switched to remote control before via a digital interface.

Example: You want to set the current to 50%. According to the register lists, the „Set current value" is at address 501 (0x1F5) and assigned function is WRITE Single Register. Expecting the device to already be in remote control mode, the message to build then has to be like this:

Message to send:

Head	FC	Start	Data	CRC
0x01	0x06	0x01F5	0x6666	0x338E

▶ Expected response:

Head	FC	Start	Data	CRC
0x01	0x06	0x01F5	0x6666	0x338E

In this case, the device is expected to return an echo of your message, indicating successful execution of the command. The display of the device should now show 50% of what's the maximum current of your device. For a power supply or electronic load with 510 A nominal current it should show 255.0 A or for a model with 170 A current rating it should show 85.00 A.

4.8.7.2 Query all actual values at once

The device holds three readable actual values of voltage, current and power. Electronic loads feature an additional actual resistance value in their displays, which can not be read via interface, but is calculated from the actual voltage and current. Hence the user can calculate the actual resistance himself.

Actual values can be queried separately or all at once. The advantage of a combined query is, that you gain a snapshot of the most recent actual values of the DC input or output. When querying separately, values may have changed already when sending the next query.

According to the register list, the actual values start from register 507. Three registers shall be read:

Message to send:

Head	FC	Start	Data	CRC
0x01	0x03	0x01FB	0x0003	0x75C6

▶

Possible response:

Head	FC	Len	Data	CRC
0x01	0x03	0x06	0x2620 0x0C9B 0x091B	0x9350

4.8.7.3 Read the nominal voltage of a device

The nominal voltage, like the other nominal values of current, power or resistance, is an important value to read from a device. They're all referenced for translating set values and actual values. It's recommended to read them from the device right after opening the digital communication line, unless the software shall not be universal.

According to the register list, the nominal voltage is a 4-byte float value in register 121.

Query message:

Head	FC	Start	No.	CRC
0x01	0x03	0x0079	0x0002	0x15D2

▶ Possible response:

Head	FC	Len	Data	CRC
0x01	0x03	0x04	0x42A00000	0xEE69

Also see *4.8.5*. The response contains a float value according to IEEE754 format, which translates to 80.0.

4.8.7.4 Read device status

All device report their device status in register 505.

Query message:

Head	FC	Start	No.	CRC
0x01	0x03	0x01F9	0x0002	0x15C6

▶ Possible response:

Head	FC	Len	Data	CRC
0x01	0x03	0x04	0x00000483	0xB952

Also see *4.8.5*. The response contains the value 0x483 which states that the device is in remote control via the USB port, that the DC input/output is switched on and that CC (constant current) mode is active.

4.8.7.5 Switch to remote control or back to manual control

Before you can control a device from remote, it's required to switch it to remote control. This is done by sending a certain command.

!	*The device will never switch to remote control automatically and can not be remote controlled with being in this condition. Reading from all readable registers is always possible.*

!	*The device will never exit remote control automatically, unless it's switched off or the AC supply is otherwise interrupted. Remote control can be left by a certain command. It then switches back to manual control.*

Switching to remote control may be inhibited by several circumstances and is usually indicated by an error message:

- Condition „**Local**“ is active (check the display on the front of your device or read the device status), which will prevent any remote control
- The device is already remotely controlled by another interface
- The device is in setup mode, means the user has accessed the setup menu and not left it yet

► How to switch a device to remote control:

1. If you are using the ModBus RTU protocol, you need to create and send a message according to the description above, for example 01 05 01 92 FF 00 2C 2B.
2. Once the switchover to remote control has been successful, the device will usually indicate the new condition in the display or with a LED, as well as it echoes the message as a confirmation

In case switching to remote control would be denied by the device, because setting **Allow remote control = No** is set in the HMI of the device, then the device will return an error message like 01 85 17 02 9E. According to ModBus specification, this is error 0x85 with error code 0x17.

Leaving remote control can be done in two ways: using the dedicated command or by switching the device to “**Local**” condition. We will consider the first option, because this is about programming.

► How to exit remote control:

1. If you are using the ModBus RTU protocol, you need to build and send a message according to the description above, for example 01 05 01 92 00 00 6D DB.

4.9 ModBus TCP in detail

This section is only about the differences of TCP message format compared to RTU message format. The core of a ModBus TCP message is still ModBus RTU. Section *„4.8. ModBus RTU in detail“* holds more information. Overview:

- A ModBus TCP message requires an additional 6, actually 7 bytes long MBAP header
- The checksum is omitted
- Transmission only via reserved port 502; any other port won't accept ModBus TCP frames
- Will only be used with Ethernet and TCP, contrary to ModBus RTU which can used on many different lines

As a result, Modus TCP messages are always 4 bytes longer than **ModBus RTU** messages. The MBAP header is specified like this:

Bytes	Meaning	Explanation
0 + 1	Transaction identifier	This identifies the message. It's copied by the device in the response and is used to identify a certain message in a pool of incoming transmissions if multiple device are communicating with the PC and the response isn't immediately. The identifier is an arbitrary value between 0 and 65535.
2 + 3	Protocol identifier	Here always 0 = ModBus protocol
4 + 5	Length	Number of remaining bytes in the message, i.e. the length of the ModBus RTU core message minus 2.
6	Unit identifier (UID)	Always defined as 0 by the ModBus TCP client. Addressing the device over a gateway, for instance Ethernet to USB, isn't possible this way.

4.9.1 Example for a ModBus TCP message

The example for READ Holding Registers from section *„4.8.7.3. Read the nominal voltage of a device“*, extended by the MBAP header and an arbitrary transaction identifier of 0x4711:

Query message:

MBAP header	UID	FC	Start	Length
0x4711 0x0000 0x0006	0x00	0x03	0x0079	0x0002

Possible response:

MBAP header	UID	FC	Length	Data
0x4711 0x0000 0x0007	0x00	0x03	0x04	0x43FA0000

With this, the control unit would query the device’s nominal voltage. The response would contain a floating point value in message part “Data”, which translates to 500 and since this is the nominal or rated voltage, it means 500 V.

4.10 ModBus communication errors

Communication errors are only related to digital communication with the device. Other alarms or errors of any kind which can be generated and indicated by the device must not be mixed up with these.

The device will return unexpected error messages in case the previously sent message is in wrong format or if the function can not be executed by some reason. For example, when trying to write a set value with WRITE SINGLE REGISTER while the device isn't in remote control. Then the message isn't accepted and the device will return an error message instead of a confirmation message. The message format can be wrong if the checksum is bad or if you try to read a bit with function READ Holding Registers instead of READ COILS.

In case of an error, the response message contains the original function code added to 0x80, in order to identify the response as error message. Overview of function codes in error messages:

FC error	Belongs to
0x81	READ COILS
0x83	READ HOLDING REGISTERS
0x85	WRITE SINGLE COIL
0x86	WRITE SINGLE REGISTER
0x90	WRITE MULTIPLE REGISTERS

Overview of the communication error codes which can be returned by the device:

Code		Error	Explanation
0x01	1	Wrong function code	The function code in the 2nd byte of the ModBus message isn't supported. See *„4.8.2. Functions“* for supported codes. The error also occurs using the wrong function code on a register
0x02	2	Invalid address	Various causes: • The register address isn't defined for your device. Every device series can have a different number of registers. Refer to the separate ModBus register list of the series your device belongs to. • When using ModBus RTU and slave address 0x01 with an older KE firmware where it only supported to use address 0x00 or when the switch "ModBus specification compliance" is set to "Limited".
0x03	3	Wrong data or data length	The length of data in the message is wrong or the data itself. For example, a set value always requires two bytes of data. If the data part of the message would be one byte only or three bytes, then the data length would be wrong. Otherwise, when sending a set value of, for example, 0xE000 to a register for which the maximum value is defined as 0xCCCC, this would be wrong data.
0x04	4	Execution	Command could not be executed, depends on the situation
0x05	5	CRC	The CRC16 checksum at the end of the ModBus RTU message is wrong or missing (perhaps due to split TCP packets) or has been transmitted in wrong byte order (high byte first instead of low byte)
0x07	7	Access denied	Access to a certain register isn't allowed or read only while trying to write, or vice versa, depending on the current device situation. Example: you cannot write to register 403 while the device isn't in remote control mode or while it's under remote control from a different interface.
0x17	23	Device in local	Indicates, that write access to the device is blocked by the "local" condition, so only read access is possible. "Local" means that remote control isn't allowed.

An example: You attempted to switch the device to remote control in order to control it from PC, but instead of an echo of your message it returns something like this: 01 85 07 03 52. This is an error message. The position of the function code contains the value 0x85. According to the first table above, this is related to the function WRITE SINGLE COIL. The error code in the message is 0x07 which means, according to the second table above, the device has denied the access. This can have different reasons, for example that the device is already in remote control via a different interface.

4.11 Explanation about specific registers

For the abbreviations of the devices series see *„1.1.2. Validity“*.

Many of the commands or register related options are self-explaining, but not all of them. Some of the not self-explaining ones will be handled below. Not all series feature the same number of commands. Every example below will indicate to which series it's compatible by showing a small table:

ELR9	PS9	PSI9	PSI5
✓	–	✓	–

For the abbreviations in the table header see *„1.1.2. Validity“*, whereas

✓ means, the command or the command group (entirely or partly) is supported by the device series.

– means, the command or the command group isn't supported by the device series.

4.11.1 Register 171

This allows to write and read an arbitrary string of up 40 characters, which can be used to uniquely identify a device amongst multiple units of the same model. It's permanently stored after being written.

4.11.2 Register 411

Described for SCPI in *„5.4.15. Commands for alarm management“.*

When using ModBus, this register is intended to reset alarm bits as represented in the device status (register 505, see below). Until these are not reset, which is considered as an acknowledgment, the bits from previously occurred alarms remain set, even if the alarms are gone already. Alarms which are still present while register 411 is used to reset the alarm bits will of course be excluded from resetting. After resetting the alarm bits, device alarms can later only be read in form of an alarm counter (registers 520 - 524).

4.11.3 Registers 500-503 (set values)

These are the most important registers to work with, because they define the DC output/input values of voltage, current, power and resistance (where featured). With ModBus, any set value is transmitted as per cent value of the nominal device values (0...100%), whereas for SCPI real values are used.

Generally, before you can use R mode with devices where internal resistance is featured, it has to be activated (register 409), else the set value is ignored.

For power supply devices of series PSI 9000 (as from 2014) and PSI 10000 which feature a simple PV function, the set value for current (register 501) is interpreted as irradiation value, as long as the device is running that simple PV function. It means, while the function is running this register doesn't define the current limit for the device, but defines a current factor representing the irradiation. In manual operation, irradiation can be only adjusted in 1% steps between 0% and 100%, while it has significantly higher resolution in remote control.

4.11.4 Registers 498, 499 and 504 (additional set values)

With date 03-2020 series PSB 9000, PSBE 9000 and PSB 10000 feature three additional set value registers for the so-called sink mode operation. These are 498 (sink power), 499 (sink current) and 504 (sink resistance).

4.11.5 Register 505 (1. Device status register)

Another important register, as it represents the device condition in one 32 bit value (ModBus). Some bits are grouped and have to be interpreted like that. According to the register list, bits 0-4 of registers 505 are a group that represents the so-called control location (see *„3.2. Control locations“*). By reading this register you can furthermore detect if the device is already in remote control to see if command “Remote mode = on” was executed by the device.

With SCPI, some but not all of these 32 bits of this register are represented in the status registers "Questionable" and "Operation". See *„5.4.2. Status registers“.*

4.11.5.1 When running master-slave

During master-slave operation (where featured), the status register uses bit 29 ("MSS") to indicate the so-called master-slave safety mode, which is activated every time the master detects any problem in the communication with the slave(s), which can occur due to a connection failure or heavy electrical interferences. The master unit will then set this bit and switch off all DC outputs/input of the slaves being still online. Offline slaves will put themselves into a similar state and switch off DC. After removal of the problem cause, the MS system has to be re-initialized, which also clears the bit.

4.11.5.2 Bit 31

Only featured with devices of the PSB and PSBE series, this bit indicates the actual operation mode regarding source and sink mode.

4.11.6 Register 511 (2. Device status register)

Series PSB 10000, PSI 10000 and ELR 10000 feature a second status register, mostly because they feature more device alarms which required a second status.

4.11.7 Registers 650 - 662 (Master-slave configuration)

ELR9	ELR5	PS9	PSI9	PSI5	PSE	DT	PST	PSIT	PSB	EL3	PSBE	PS3	PS2	PS1	PSI1	PSB1	PSBE1	ELR1
✓	–	–	✓	–	✓	–	–	–	✓	–	✓	–	–	✓	✓	✓	✓	✓

This block of registers is used to configure the master-slave operation mode (short: MS) the same as you can do it in the setup MENU of your device. Refer to the device's operating guide about how the MS works and what do to in preparation of its remote control. For remote control of a MS system, it's expected to be fully wired. Before MS operation, slave units can be configured remotely, but during MS operation they can only be monitored, if required. It's, however, recommend to only control the master unit. Configuration and activation of MS operation can also be done manually and remote control can be taken over later after the master has initialised the system.

With the MS system not being set up yet, these registers have to be used in a certain order on any unit:

1. Switch to remote control with register 402.
2. Activate MS operation mode with register 653.
3. Select with register 650 whether the unit you are configuring will be Master or Slave.

Further steps, only to be performed on the master unit:

4. Initialise the MS system with register 654.
5. When running two-quadrants operation and there are multiple electronic loads running in an MS system:

   Set the master load to be Share bus slave with register 652, else switching the quadrants via the Share bus wouldn't work.
6. Optional: check with register 655, whether the initialisation has been successful.
7. Optional: Query the number of initialised slaves with register 662 --> in case the returned number doesn't match the number of slave units you want to use in the MS system, check the settings of all units and the cabling and repeat the initialisation.
8. Optional: read the nominal values (registers 656-660) of the previously initialised MS system to be used as value translation reference while running the MS.

> *From firmware KE 2.13 (9000 series devices without GPIB) or KE 2.04 (9000 series devices with GPIB) the devices support reading the ratings of voltage, current, power and resistance of an initialized MS system via registers 121 - 129, so that step 8 becomes unnecessary.*

9. Optional: configure alarm thresholds, event thresholds and set value limits.

During MS operation, the remotely controlled master unit can be accessed like a single unit, with a few exceptions (see device manual). Set values and actual values are always per cent values in relation to the ratings. Access to those set values registers is described in the other sections.

4.11.8 Registers 850 - 6695 (Function generator)

ELR9	ELR5	PS9	PSI9	PSI5	PSE	DT	PST	PSIT	PSB	EL3	PSBE	PS3	PS2	PS1	PSI1	PSB1	PSBE1	ELR1
✓	–	–	✓	–	–	✓	–	✓	✓	–	–	–	–	–	✓	✓	–	✓

The integrated function generator is a complex feature. It's configured and loaded with a lot of registers. Before you can run a function, setup is required every time and in a certain order. Those standard functions like rectangle or sine wave, as directly available on the HMI, are only indirectly accessible in remote control, via the arbitrary generator

First of all, you need to decide which one of the two generators you want to use, **arbitrary** or **XY**. All further steps depend on this selection. Other functions, such as battery test or MPP tracking, belong to the function generator, but are internally realized by code.

> *All function generator settings and loaded data (sequence points, XY table) are not stored inside the device and have to be loaded into it every time before you can use the function generator. These data and settings are separate from what you can manually set up on the HMI.*

4.11.8.1 Procedure for the arbitrary generator

This generator is used to create wave functions like sine, square, triangle or trapezoidal.

Step 1:

Select, whether to apply the function to the voltage U (register 851) or the current I (register 852). Before you haven't made this selection, the device can not accept sequence point data, because the sequence data is run through a plausibility check against the device's adjustment limits.

Step 2:

Define start sequence point (register 859), end sequence point (register 860) and number of cycles of that block to repeat (register 861).

Step 3:

Load data for x out of 99 sequence points (registers 900-2468, 8 values per sequence point).

Step 3.1:

Not always required: send submit command (register 862). This would always be required when using an interface which can't send the data of a sequence in one message, for example CANopen. It wouldn't use a ModBus message anyway, but requires to write to that register. With direct ModBus, sending this command isn't required if registers 859, 860 and 861 have been written before writing the sequence point data. However, when later re-defining start, end and cycles by re-writing the registers from step 3, this command must be sent in order to submit the changes.

Step 4:

Set global voltage limit (register 500), if the function is applied to the current. Else set global current limit (register 501, plus 499 for the PSB series), if the function is applied to voltage. Set global power limit (register 502, plus 498 for the PSB series) for both modes.

Step 5:

Control the function generator with start/stop (register 850), which would automatically turn the DC input/output on if still off. Alternatively and when it's wanted to settle the static values before the actual function run, the DC input/output could be switched on (register 405) separately and before starting the function. After stopping the function run, the FG can also be reconfigured like when just selecting a different block of sequence points to run by changing start and end sequence point. This would, however, also require to send the submit command. See step 3.1.

Step 6:

When finished, leave the function generator by deselecting your former selection of either U (register 851) or I (register 852) again.

4.11.8.2 Programming example for the arbitrary generator

Before you can configure the arbitrary generator for a ramp it's necessary to think about the best way to achieve the ramp generation. It's important to keep in mind that the arbitrary generator stops at the end of the function run, unless you set the repetition to infinite. After a stop, the DC input/output remains switched on. In case of a ramp, this is wanted, because the end value shall usually remain set for time x. However, the device will go to static mode again, setting the static set values of U, I and P. The static values also apply for the period before the function run and for situations when the DC output/input is already switched on.

The stop action and the static values are thus a little problematic for the ramp function. Why? Supposed, you wanted to have a power supply generate a ramp starting from 0 V. The static value for U (voltage) would then be set to 0. But after the function stop, the device would also set 0 V and the voltage would drop from whatever value has been set during the function run. Conclusion: the static value of voltage has to be part of the function.

In order to achieve this, the function has to consist of two parts: one for the rising or falling ramp and the other for the static value. This can be done using two sequences of the arbitrary generator.

Assumption: you have a power supply and the ramp shall start from 0 V and rise to 50 V within 6 seconds. The end voltage shall remain constant for 3 minutes (the time can be varied at will). Sequences 1 and 2 will be used. Remote control is already active, we only need to configure the sequences. Since the ramp will make the voltage rise linearly, using only the DC part of a sequence, the parameters for the AC part (indexes 0 - 4) should be set to zero in order to avoid remainders which could disturb the correct wave generation.

The first step is to **activate function generator mode**, in this case we select arbitrary generator for U:

Addr	FC	Start	Data	CRC
0x01	0x05	0x0353	0xFF00	0x7C6F

Next step is to create the **ModBus message to configure sequence 1**, **the rising ramp**. According to the register list start register 900 (WMR, function code 0x10) is assigned to sequence 1. Because the data part wouldn't fit the width of this document's page size, the 8 float values are below each other:

Addr	FC	Start	Regs	Bytes	Data	CRC	Description
0x01	0x10	0x0384	0x10	0x20	0x00000000		Start value of AC part: 0 V
					0x00000000		End value of AC part: 0 V
					0x00000000		Start frequency of AC part: 0 Hz
					0x00000000		End frequency of AC part: 0 Hz
					0x00000000		Start angle of AC part: 0°
					0x00000000		Start value of DC part: 0V
					0x42480000		Start value of DC part: 50V
					0x4AB71B00	0x52B8	Rise time in µs: 6,000,000 (6 seconds)

After this, the **ModBus message to configure sequence 2, the static voltage** would be next. Start register here is 916:

Addr	FC	Start	Regs	Bytes	Data	CRC	Description
0x01	0x10	0x0394	0x10	0x20	0x00000000		Start value of AC part: 0 V
					0x00000000		End value of AC part: 0 V
					0x00000000		Start frequency of AC part: 0 Hz
					0x00000000		End frequency of AC part: 0 Hz
					0x00000000		Start angle of AC part: 0°
					0x42480000		Start value of DC part: 50V
					0x42480000		Start value of DC part: 50V
					0x4D2BA950	0x627B	Hold time in µs: 180,000,000 (= 3 minutes)

And as last step, configuration of the arbitrary generator itself:

Addr	FC	Start	Data	CRC	Description
0x01	0x06	0x035B	0x0001	0x399D	Register 859, WSR, start sequence: 1
0x01	0x06	0x035C	0x0002	0xC85D	Register 860, WSR, end sequence: 2
0x01	0x06	0x035D	0x0001	0xD99C	Register 861, WSR, sequence cycles: 1
0x01	0x05	0x035E	0xFF00	0xEDAC	Register 862, WSC, submit the settings for the FG now
0x01	0x06	0x01F5	0xCCCC	0xCD51	Register 501, WSR, global current limit: 100%
0x01	0x06	0x01F6	0xCCCC	0x3D51	Register 502, WSR, global power limit: 100%

Setting the global values (current, power) to maximum or any other value that wouldn't interfere the ramp generation is necessary, especially when running multiple devices in master-slave where those set values also limit the slaves' output.

Now the entire function setup is done and the function can be started. If the DC output of your device would still be off when starting the function, it will automatically switch on. Alternatively, you could switch it on separately with the corresponding command and before actually running the function. But it's not necessary here, because the voltage shall start to rise from 0 V. In other situations where the starting level isn't zero, it would be required to switch on the DC output first and wait for the voltage to settle.

For the number of sequence cycles 1 is sufficient, but it can be changed at will. The the whole function would be repeated after 3 minutes and 6 seconds. The voltage, when using a power supply, wouldn't instantly drop to 0 V at the end of the first function run and before the second one starts. It depends on the load how long the voltage takes to sink and the ramp, when being graphically recorded on an oscilloscope, could look different than expected. This could be circumvented by adding a third sequence which only uses some time for the voltage to go down.

Addr	FC	Start	Data	CRC	Description
0x01	0x05	0x0352	0xFF00	0x2DAF	Register 850, WSC, Run function

4.11.8.3 Procedure for the XY generator

Step 1:

Select the XY function generator mode with following registers:

Mode	PSB 9000 / PSB 10000 / PSI 10000 / ELR 10000 series	All other series with XY generator
UI	not available	854
IU	856	855
Simple PV (only with power supplies)	856	426
FC (only with power supplies)	856	854 (as UI mode)

Step 2:

Load the XY table data in 256 blocks of 16 values (registers 2600 - 6695). This corresponds to max. 4096 values for a measurement range of 0-125% U_{Nom} or I_{Nom}. Less data can also be loaded, for instance 3277 values for 0-100%. All values which are not set result in 0 V or 0 A.

Step 3:

This step is only required with older firmware versions. Rule of thumb: if the corresponding register list for the firmware version of your device still lists register 858, it must be used.

Submit table data (register 858).

Step 4:

Set static values which are not affected by the table

UI function: current (register 501 or CURR command) and power (register 502 or POW command)

IU function: voltage (register 500 or VOLT command) and power (register 502 or POW command)

Step 5:

Run the function generator by switching the DC input/output of your device on (register 405). For PV mode you may also want to control irradiation while the function is running. This is done by sending set values to register 501 (current), where 100% corresponds to a factor of 1 and 0% to a factor of 0. This factor is multiplied to the simulated current I_{MPP} of the MPP which usually is situated somewhere on the PV curve you loaded in step 2.

Step 6:

Exit the function generator by unselecting your former mode setting from step 1 via the same registers.

4.11.9 Registers 850 - 1692 (Sequence generator in ELR 5000)

The so-called sequence generator of ELR/ELM 5000 series is a simplified version of the arbitrary generator of other series, thus using some of the same registers. According to the register list for ELR 5000 series, a block of registers between 850 and 1692 is used to configure the 100 sequence points and to control the generator.

4.11.10 Registers 850 - 854 and 900 - 908 (Function generator in EL 3000 B)

The function generator of the 2017 released series EL 3000 B (short: EL3) is based on a ramp generator, thus offering functions like ramp, triangle, rectangle and trapezoid. It partly uses the same registers as with other series, but they are different in handling.

4.11.10.1 Programming example

Supposed you wanted to apply a rectangle on the current of an EL 3080-60 B, with an amplitude of 8 A, an offset of 1 A and a frequency of 50 Hz with duty cycle 9:1. Following registers would have to be loaded in the given order from top to bottom:

Register	Name	Purpose
852	Select mode "I"	Switch the function generator to apply the generated signal to the current. Must be set first because only then the device can check values written to the other registers for validity
900	Static level 1	Offset, shall be set to 1 A. This translates to hexadecimal percent value 0x0369.
901	Static level 2	Amplitude + offset, shall be set to 9 A, hence 0x1EB1.
902 / 906	Rise / fall time	Since the desired wave form is rectangular, these two time values should be 0, but the minimum is 3 µs, so the registers are written with a float value of 3.

904	Hold time level 2	Relates to the 90% pulse. With a frequency of 50 Hz the period is 20 ms and the 90% are 18 ms (=18000 µs). Thus write a float value of 18000 to this register.
908	Hold time level 1	Relates to the 10% pause. With a frequency of 50 Hz the period is 20 ms and the 10% are 2 ms (=2000 µs). Thus write a float value of 2000 to this register.

After the configuration, the function run can be started.

Register	Name	Purpose
850	Start / Stop	Start the function generator with 0xFF00. It will run with the configured parameters until stopped by sending 0x0000 or due to a device alarm.

This FG is an exception, because it allows for sending and submitting new values during the function run. If required, you would first configure the wave with registers 900 - 908 anytime and then submit with 854. After the current period, which is defined by the last valid time values, has elapsed, the new values would become effective. The period can't be stopped in the middle in order to change the parameters. This is only achieved by stopping the FG.

Register	Name	Purpose
854	Submit new function data during run	Submit the new data with 0xFF00. If the new data was not yet written, the former data will remain valid.

4.11.11 Registers 9000 - 9009 (Adjustment limits)

ELR9	ELR5	PS9	PSI9	PSI5	PSE	DT	PST	PSIT	PSB	EL3	PSBE	PS3	PS2	PS1	PSI1	PSB1	PSBE1	ELR1
✓	✓	✓	✓	–	✓	✓	✓	✓	✓	✓	✓	✓	✓	✓	✓	✓	✓	✓

For SCPI, this is explained in *„5.4.8. Commands for adjustment limits“*. ModBus users should also read that section for the general handling of these settings. Apart from that, setting these parameters is like setting a set value (U, I, P, R).

4.11.12 Registers 10007 - 10900

ELR9	ELR5	PS9	PSI9	PSI5	PSE	DT	PST	PSIT	PSB	EL3	PSBE	PS3	PS2	PS1	PSI1	PSB1	PSBE1	ELR1
✓	✓	✓	✓	✓	✓	✓	✓	✓	✓	✓	✓	✓	–	✓	✓	✓	✓	✓

Those registers can be used to remotely configure the various built- in or optionally available digital interfaces for the above stated series. The registers are connected to the corresponding settings in the device's setup menu, where featured.

Contrary to manual control, the settings for the pluggable interface modules of series IF-AB (for PSI 9000 3U series etc.) can even be configured while the interface module isn't yet installed.

4.11.13 Registers from 11000 (MPP tracking feature)

ELR9	ELR5	PS9	PSI9	PSI5	PSE	DT	PST	PSIT	PSB	EL3	PSBE	PS3	PS2	PS1	PSI1	PSB1	PSBE1	ELR1
✓	✓	–	–	–	–	✓	–	–	✓	✓	–	–	–	–	–	✓	–	✓

The MPP tracking feature is only available with electronic load devices and with the bidirectional power supply series PSB 9000. With this feature the device emulates the characteristics of a solar inverter device when seeking to find the maximum power point (MPP) of a solar panel. More details about this feature and the available modes are in the user manual of those series supporting this feature.

Registers 11000 - 11016 are related to the configuration parameters as you would adjust them on the display of the load device. Registers 11100 - 11199 are related correspond to the "load voltage values from USB stick" function when using manual control, while parameters 11200 - 11499 correspond to the "save the results to USB stick" function when using manual control and after MPP4 mode has been finished gathering data.

4.11.13.1 Programming example for MPP4 mode

Mode MPP4 is available for remote control in all the above listed series, but not with all of them also on the control panel (HMI) and thus not described in the user manual. If you need more information about this mode, we suggest to refer to another user manual, for example from EL 9000 B 3U series.

The table shows the sequence of commands to send in order to load and run a user defined curve with 75 points.

Register	Name	Purpose
11000	Select MPP4	Switch the function generator to mode MPP4

11000 - 11174	Load curve data	Load 75 voltage values on an user defined curve. The next two steps define the actual range of points to run through, which ideally matches the number of loaded points. In case a point is processed which has not been loaded, the device will set 0 V.
11015	Set end point	Defines the end point of a range of points to run through. Can be an arbitrary value between 1 and 100. Since the start point can't be higher than the end point, the end point is set first.
11014	Set start point	Defines the start point of a range of points to run through. Can be an arbitrary value between 1 and end point, because it can't be higher than the end point.
11013	Tracking interval	Defines the time (in milliseconds) between two curve points.
11016	Repetitions	Defines the number of additional cycles. The result data, which can be read later, will always contain the data from the last cycle. If the curve shall be run only once, set this to 0.
11010	Start tracking	After the start the device will set the voltage of the first point in the defined range, measure current and power and store the values. Then continue to the next point etc. This mode stops automatically after a duration which results from the tracking interval, the number of points in the range and the repetitions. The test can be stopped anytime with this register.
11011	Read status	optional: read the status of the tracking run in order to determine when it's finished
11012	Read errors	optional: read possible errors during or after the test to determine if the test has run through successfully

4.11.14 Registers from 11500 (battery test)

ELR9	ELR5	PS9	PSI9	PSI5	PSE	DT	PST	PSIT	PSB	EL3	PSBE	PS3	PS2	PS1	PSI1	PSB1	PSBE1	ELR1
✓	–	–	–	–	–	✓	–	–	✓	✓	–	–	–	–	–	✓	–	✓

Devices with the capability of running as electronic loads, such as series EL, ELR or PSB and with a function generator feature offer a battery test function for manual control on their HMI. Remote battery test configuration and control, if not yet available, can then be brought to these device series via firmware update. Not every series offers the same set of test features, which naturally comes from the type of device. Parameters for the different modes are configured separately while control and evaluation at the test end are the same for all modes. The registers are connected to the parameters as shown on the HMI when manually operating this test function. Thus it's recommended to read the section about the battery test in the corresponding device manual and probably to "play" around with the settings on the HMI to get a feeling for the flow before starting with remote programming. A short overview about the involved registers:

Register	Purpose	EL(R)?	PSB?
11535	Activates the battery test and selects the mode	x	x
11500 - 11513	Configuration of the static current battery test mode "Discharge"	x	x
11514 - 11531	Configuration of the pulsed current battery test mode "Discharge"	x	x
11545 - 11558	Configuration of the static current battery test mode "Charge"	-	x
11559 - 11584	Configuration of the dynamic battery test mode "Charge/Discharge"	-	x
11532	Test run control	x	x
11536 - 11544	Evaluation (time, Ah, Wh)	x	x

4.11.15 Register from 12000 (advanced photovoltaics simulation acc. DIN EN 50530)

ELR9	ELR5	PS9	PSI9	PSI5	PSE	DT	PST	PSIT	PSB	EL3	PSBE	PS3	PS2	PS1	PSI1	PSB1	PSBE1	ELR1
–	–	–	✓	–	–	–	–	–	✓	–	–	–	–	–	✓	✓	–	–

Photovoltaics simulation is a function based on the XY generator and is only featured with some power supply series. With date 03/2020 these are:

- PSI 9000 2U - 24U
- PSI 9000 WR
- PSB 9000 / PSB 10000

The advanced simulation according to DIN EN 50530 is supported from firmwares KE 2.19/HMI 2.10 (PSI) or KE 2.25/HMI 2.04 (PSB). All ModBus registers which represent parameters related that to this simulation and which can be written to the device or read from are referenced in the EN 50530 paper. The paper is furthermore the reference for the user regarding setup and correct use of this simulation feature.

The procedure to set up and control the extended PV simulation using ModBus protocol isn't different to manual handling (see user manuals of the devices) on the device's HMI or when using SCPI commands (see examples in section *„5.5.3. Programming examples for PV simulation (DIN EN 50530)“*). These step by step examples have an extra column in the table that holds the related ModBus register number. One of these examples (nr. 2) converted to ModBus RTU format (percent set values translated for a device with 80 V and 170 A rating):

Configuration (before the start)

Nr.	Command	Description
1	**01 05 01 92 FF 00 2C 2B**	Activate remote control
2	**01 06 2E E1 00 03 90 D5**	Activate PV simulation mode **DAYET**
3	**01 06 2E F0 00 00 80 D1**	Select technology: Manual (all required parameters must be defined, here as with commands 4-10)
4	**01 10 2F 02 00 02 04 3F 4C CC CD F3 11**	Fill factor voltage (FF_U): 0,8
5	**01 10 2F 04 00 02 04 3F 47 AE 14 EA 03**	Fill factor current (FF_I): 0,78
6	**01 10 2F 06 00 02 04 39 9D 49 52 80 AB**	Temperature coefficient α for I_{SC}: 0,0003 /°C
7	**01 10 2F 08 00 02 04 BB 44 9B A6 A5 83**	Temperature coefficient β for U_{OC}: -0,003 /°C
8	**01 10 2F 0A 00 02 04 3D 94 7A E1 04 89**	Scaling factor C_U for U_{OC}: 0,0725
9	**01 10 2F 0C 00 02 04 39 66 AF CD 7B 2D**	Scaling factor C_R for U_{OC}: 0,00022 m²/W
10	**01 10 2F 0E 00 02 04 3B 4E 70 3B A3 32**	Scaling factor C_G for U_{OC}: 0,00315 W/m²
11	**01 05 2E F1 FF 00 D4 E1**	Select input mode: **ULIK**
12	**01 06 2F 10 61 47 E9 79**	Set open circuit voltage: 38 V (=0x6147)
13	**01 06 2F 11 08 6F 96 F7**	Set short-circuit current: 7 A (=0x086F)
14	**01 05 2E F2 FF 00 24 E1**	Activate data recording
15	**01 05 2E E5 00 00 D5 15**	Deactivate interpolation of day trend data
16	**01 06 01 F4 61 47 A0 66**	Set global voltage limit: ≥Uoc (=0x6147)
17	**01 06 01 F6 CC CC 3D 51**	Set global power limit: 100% (=0xCCCC)

Write day trend data (before the start)

Nr.	Command	Description
18	**01 05 2E E6 FF 00 64 E5**	Select access mode: write
19	**01 05 2E E7 FF 00 35 25**	Delete former data (should be executed every time before loading new data)
20	**01 10 2E EA 00 06 0C 00 00 00 01 44 44 66 66 00 00 03 E8 B5 76**	Write 1st day trend data set into index 1: Irradiation: 500 W/m² (=0x4444) Temperature: 20°C (=0x6666) Dwell time: 1000 ms (=0x000003E8)
	! *The dwell time is defined to have a minimum of 500 ms. However, for the very first day trend data set it's expected to set 1000 ms or higher, because else the function run might fail.*	

Nr.	Command	Description
21	**01 10 2E EA 00 06 0C 00 00 00 02 6D 3A 74 0D 00 00 05 DC D9 3F**	Write 2nd day trend data set into index 2: Irradiation: 800 W/m² (0x6D3A) Temperature: 28°C (=0x740D) Dwell time: 1500 ms (=0x000005DC)
...		Write further data sets, a total of 500
519	**01 10 2E EA 00 06 0C 00 00 01 F4 A3 D6 7F FF 00 00 4E 20 09 53**	Write 500th day trend data set into index 500: Irradiation: 1200 W/m² (=0xA3D6) Temperature: 35°C (=0x7FFF) Dwell time: 20000 ms (=0x000034AF)

Control

Nr.	Command	Description
520	**01 05 2E E0 FF 00 84 E4**	Start simulation (register 12000) -> the simulation will stop automatically after the time has elapsed that results from the total of dwell times in all written data sets

During the simulation, the index counter in register 12010 is updated with every next day trend point on the curve. It can be read and used to determine at which point the curve has been stopped due to an unexpected error, such as a device alarm.

Analysis after simulation end

Nr.	Command	Description
521	**01 03 2E F4 00 02 8C D1**	Read number (n) of recorded data sets. This number isn't related to the number of day trend data sets in use. This feature records a new data set every 100 ms. Depending on the total simulation time, the record buffer could fill (max. 16 h record time) and overwrite existing data. It may become necessary to calculate the total simulation time from the day trend data sets and start reading the recorded data during simulation, then clearing the buffer and later read the rest of data.
522	**01 10 2E F6 00 02 04 00 00 00 01 68 A0**	Select first data set (index 1) for reading
523	**01 03 2E F8 00 08 CC D5**	Read data from data set (index) 1
...		Read further n-1 data sets:

5. SCPI protocol

SCPI is an international standard for a clear text based command language. Details about the standard itself can be found on the internet.

5.1 Format of set values and actual values

In the SCPI command language **real values** are used, with or without unit. It means, if you wanted to set a current of 177.5 A you would use the simple command **CURR 177.5** or, with unit, **CURR 177.5A**. Below you will find more detailed information about the available commands and their syntax.

5.2 Syntax

Specification according to „1999 SCPI Command reference".

Following syntax formats can occur in commands and/or responses:

Values	This numeric value corresponds to the value in the display of the device and depends on the nominal values of the device. Rules: - The value must be sent after the command and separated by a space - Instead of a numeric value you can also use:	
	MIN	corresponds to the minimum value of the parameter
	MAX	corresponds to the maximum value of the parameter
<NR1>	Numeric values without decimal place(s) and without physical unit	
<NR2>	Numeric values with decimal place (floating point), includes NR1, with or without physical unit	
<NR3>	Like <NR2>, but with multiplier (supported are: k/K for kilo)	
<NRf>	<NR1> or <NR2> or <NR3>, negative values supported	
Unit	V (Volt), A (Ampere), W (Watt), OHM, s (Seconds)	
<CHAR>	0..255: Decimal value	
<+INT>	0..32768: Positive integer value (output from device)	
<B0>	1 or ON: Function is/will be activated	
	0 or OFF: Function is/will be deactivated	
<B1>	NONE: manual operation active, switching to remote control possible	
	LOCal: local (manual) operation only, reading of data possible	
	REMote: device is in remote control	
<ERR>	Error with number and description	
<SRD>	String data, various formats: - IP address as number string with dots as separator, for example „192.168.0.2" - Key words, for example AUTO or OFF	
<Time1>	<NR2>s (floating point time format in seconds)	
<Time2>	<SRD> as HH:MM:SS or HH:MM:SS.MS (hours/minutes/seconds/millseconds)	
<Time3>	<NR1> in seconds or milliseconds	
;	The semicolon is used separate multiple commands within one message	
:	The colon separates the SCPI keywords (main system, subsystems)	
[ ]	Lowercase letters and the content of square brackets are optional	
?	The question mark identifies a message as query. A query can be combined with a control message (command concatenation). Note, that it's required to wait for the response of the query before the next control message can be sent.	
->	Response from device	

5.2.1 Upper and lower case

SCPI uses upper case commands by default, though the device also accept lower case form.

5.2.2 Long form and short form

SCPI commands have a long form and a short form. The short form (e.g. SOUR) and the long form (e.g. SOURCE) can be used arbitrarily. To distinguish both forms, the commands as described in the following sections are written partly in upper case (indicates short form), partly in lower case letters (indicates the additional part of the long form).

5.2.3 Concatenated commands

It's possible to concatenate up to 5 commands in one message. The commands must then be separated by a semicolon (;). Example:

VOLT 80;CURR 20;POW 3kW

The command in the string are processed from left to right, so the order of commands is important to achieve correct results. When querying multiple values or parameters at once, the returned string is also in coupled format, with the queried returns separated by semicolons.

The device's internal buffer for SCPI strings is 256 bytes. Should the concatenated response string of a concatenated query exceed the buffer size, the device will not respond and instead generate error -225.

5.2.4 Termination character

Ethernet interfaces require to attach a termination character to the message, while others don't, such as USB. There the termination character is optional and used in order to maintain compatibility between several different interfaces in control softwares which use SCPI. Devices with installed option 3W, means a **GPIB** interface, and those using a socket based line like **Ethernet** absolutely require to send this character or else a timeout error will occur.

Supported termination character(s): **0xA** (LF, line feed)

The requirement for the termination character has been introduced in a specific firmware version. It may thus occur, that after an update of a device with a quite old firmware for which a software has been programmed, that this software cannot communicate anymore if it doesn't attach the termination character.

5.2.5 Communication and other errors

Errors in terms of SCPI are usually communication errors, but can also be extended by device specific alarms. According to the standard, devices using SCPI don't return errors immediately. They have to be queried from the device. The query can occur directly with the error command (see *5.4.5.4*) or by first reading the signal bit "err" from the STB register (see *„5.4.2. Status registers“*).

The error format is defined by the standard and is made of a string containing a number (the actual error code) and an explanatory text. Following errors strings can be generated by the device:

Error code / error text	Description
0,"No error"	No error
-100,"Command error"	Command unknown
-102,"Syntax error"	Command syntax wrong
-108,"Parameter not allowed"	A command was sent with a parameter though the command doesn’t use parameters
-200,"Execution error"	Command could not be executed
-201,"Invalid while in local"	Control command could not be executed, because device is in LOCAL mode
-220,"Parameter error"	Wrong parameter used
-221,"Settings conflict"	Command could not be executed because of the condition of the device being in the setup menu or isn't in remote mode yet
-222,"Data out of range"	Parameter could not be set because it exceeded a limit
-223,"Too much data"	Too many parameters per command or too many commands at once
-224,"Illegal parameter value"	A parameter not specified for the command has been sent
-225,"Out of memory"	A concatenated query has been sent whose concatenated response would exceed 256 characters (max. SCPI buffer length), such as 5x *IDN?
-999,"Safety OVP"	Exception (device alarm), because no communication error: Safety OVP (only available with 60 V models of select series) has been triggered (see device manual). It requires to power cycle the device.

5.3 Examples for a first start

5.3.1 Ping or query device information

It's always recommended to ping a device first, in order to test if it responds at all. With SCPI, this is usually done by querying the identification string:

Protocol	Command
SCPI	*IDN?

As an immediate response, the device might send, for example:

Protocol	Response
SCPI	EA Elektro-Automatik GmbH&Co.KG, EL 9080-340, 1240210002, V2.14 14.05.2018 V2.24 04.06.2018 V1.6.5

5.3.2 Switch to remote control or back to manual control

Before you can remotely control a device, you need to switch it to remote control by sending the dedicated command. Also see the SCPI command description below.

The device will never switch to remote control automatically and can not be remotely controlled without being in this condition. Reading statuses and values is possible anytime.

The device will never exit remote control automatically, unless it's switched off or the AC supply is otherwise interrupted. Remote control can be left by a certain command or by manual action on the HMI.

Switching to remote control may be inhibited by several circumstances and is usually indicated by an error message:

- Condition **Local** is active (check the display or control panel on the front of your device), which will prevent any remote control
- The device is already remotely controlled by another interface
- The device in setup mode, means the user has accessed the setup menu and not left it yet

► How to switch a device to remote control:

1. If you are using SCPI command language, send a text command (the space is required):
   SYST:LOCK␣1 or SYST:LOCK␣ON

Leaving remote control can be done in two ways: using the dedicated command or by switching the device to "**Local**" condition. We will consider the first option, because this is about programming.

► How to exit remote control:

1. If you are using SCPI command language, send a text command (the space is required):
   SYST:LOCK␣0 or SYST:LOCK␣OFF

5.4 Command groups

Commands related to specific features of a device are grouped. Not all series feature the same number of commands. Every command below will indicate to which series it's compatible. Example:

ELR9	PS9	PSI9	PSI5
✓	–	✓	–

For the abbreviations in the table header see *„1.1.2. Validity“*, whereas

✓ means, the command or the command group (entirely or partly) is supported by the device series.

– means, the command or the command group isn't supported by the device series.

5.4.1 Standard IEEE commands

In relation to the old interface standards GPIB and IEEE 488, some of the standard commands have been implemented. They are supported in all devices which feature SCPI command language.

5.4.1.1 *CLS

Clears the error queue, the status byte (STB) and all bits in the Event Status Register (ESR), except for bit 0.

5.4.1.2 *IDN?

Returns the device identification string, which contains following information, separated by commas:

1. Manufacturer
2. Model name
3. Serial number
4. Firmware version(s) (in case there are several, these are separated by a space)
5. User text (arbitrary user-definable text, as definable with SYST:CONFIG:USER:TEXT)

5.4.1.3 *RST

When sent, this will set the device to a defined state, except remote control is denied by the device:

1. Switch to remote control (same as SYST:LOCK 1)
2. Set DC input/output to off
3. Clear alarm buffer
4. Clear status registers to default condition (QUEStionable Event, OPERation Event, STB)

5.4.1.4 *STB?

Reads the STatus Byte register. The signal run of the various device conditions and events is illustrated in the register model below. The STB bits in particular:

Bit 0: *sec_ques*, the second Questionable Status Register is active (one or several events have occurred)

Bit 1: not used

Bit 2: *err*, Error Queue --> one or several error in the error buffer. By reading the error buffer or sending *CLS it's flushed and the bit *err* is reset

Bit 3: *ques*, Questionable Status Register is active (one or several events have occurred)

Bit 4: not used

Bit 5: *esr*, Event Status Register is active (one or several events have occurred)

Bit 6: Master Summary Status, collective signal from the Service Request Enable register

Bit 7: *oper*, Operation Status Register is active (one or several events have occurred)

5.4.1.5 *ESR?

Reads the Event Status Register. This register holds signals that are related to SCPI command transfer and execution.

5.4.1.6 *ESE␣<NR1>

Reads with *ESE? or sets the Event Status Enable register, a signal filter for the ESR. The maximum filter value is determined by the supported bits (see register model below).

5.4.1.7 *SRE␣<NR1>

Reads with *SRE? or sets the Service Request Enable register.

5.4.2 Status registers

Only certain device conditions and alarms can be read with dedicated SCPI commands. The remaining statuses are grouped in status registers. These can be read arbitrarily, either direct or indirect. Indirect would be regular polling of the status byte (STB). It tells what linked status register (see model below) has recorded at least one event. The difference when reading the status registers directly would be, that the user would have to find out if and what register has changed. The bits in the status byte register will do that job for you. If they remain 0, nothing has happened.

Once a bit in the STB signalizes that there was an event recorded in QUES or OPER register, you could read the corresponding event or condition register of OPER and QUES, in order to find out which bits have changed. Disadvantage when reading the event register: it only signals positive bit changes (0 -> 1), so that it would not signal when an alarm, for instance OVP, is gone already until the event register is read again. The advantage on the other hand that it allows the user to read and record alarms even after they're gone already.

> *By default, all :ENABle registers are 0 upon device start*

Register model (except for series PSB 2000 B TFT):

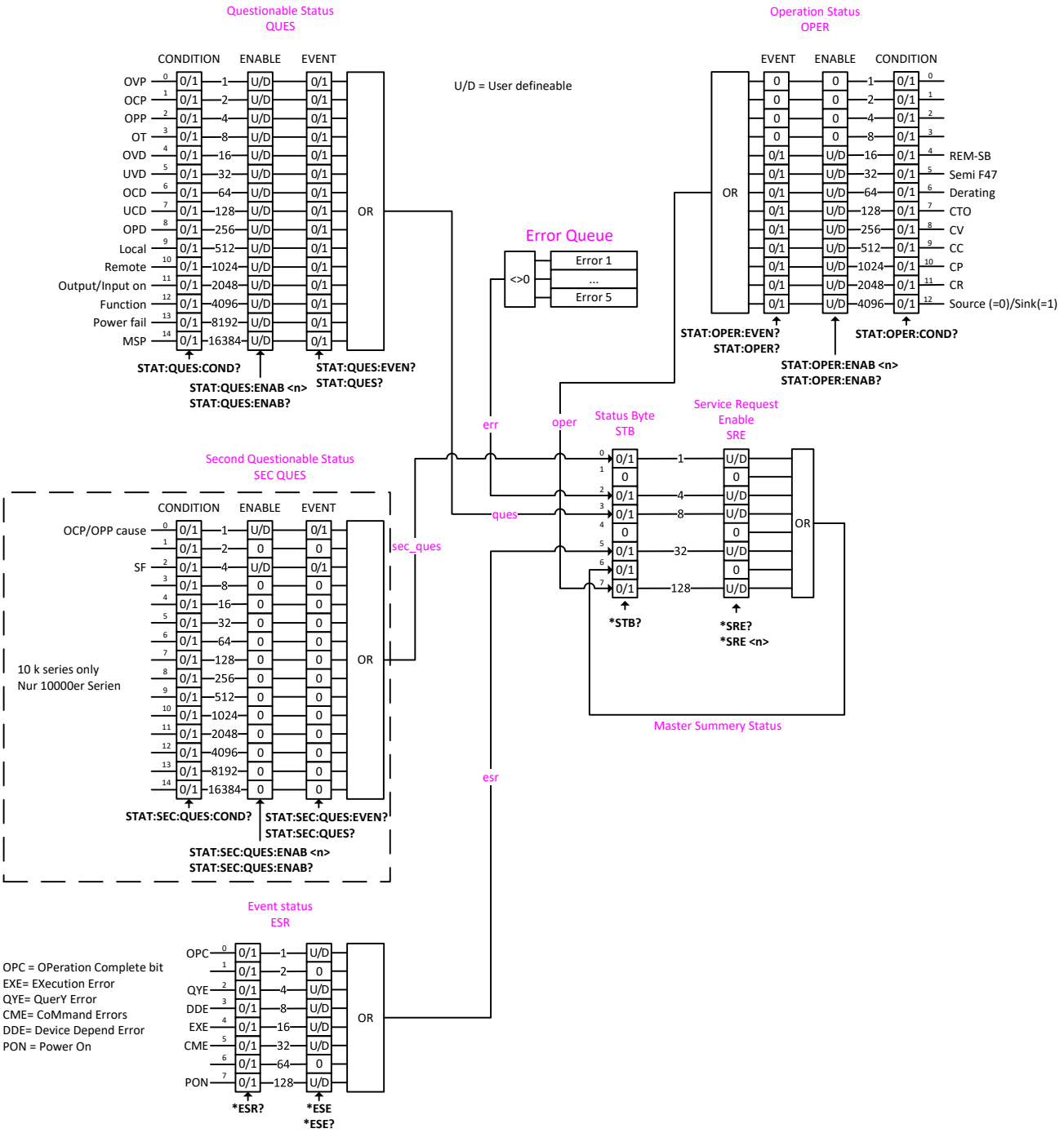

Register model (only for series PSB 2000 B TFT):

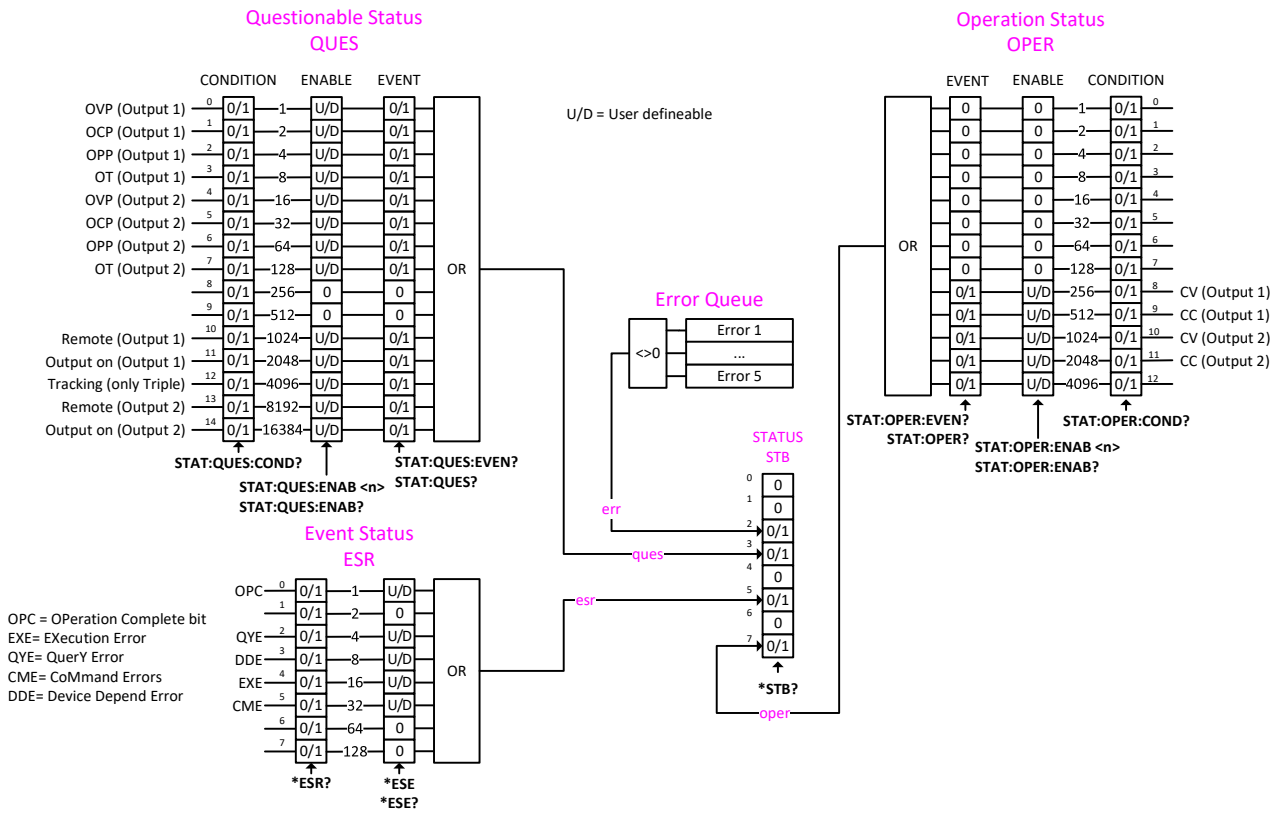

The bits in the CONDition subregister of OPERation and QUEStionable are linked to the status bits of ModBus registers 505 and 511. The above shown overview is valid for a lot of series and not every series supports all bits shown, so there's a rule of thumb: if any status bit shown in the above register model isn't also listed in the ModBus register list for your particular device, then it's not supported by the device.

Device alarms like OVP are signaled in the subregisters :CONDition and :EVENT. They have to be acknowledged separately using commands SYST:ERR? or SYST:ERR:ALL?, which is considered as alarm acknowledgment and will clear the corresponding bit in :CONDITION, but only if the alarm condition isn't present anymore. Acknowledged alarms can later only be read from the device in form of an alarm counter (where featured and only available from a certain KE firmware version). It's recommended to regularly poll alarms from the device and to query STAT:QUES? prior to SYST:ERR?.

Only with 60 V models (available in select series): the additional alarm "Safety OVP" (SOVP, see device manual), isn't signaled in a different way, as a combination of alarm PF (Questionable Status, Bit 13) and alarm OVP (Questionable Status, Bit 0). Additionally, the unerasable error -999 is put into the error queue. SOVP can only be acknowledged by power-cycling the device.

5.4.2.1 STATus:QUEStionable?

Reads the Questionable status EVENT or CONDITION register. The device will return a 16 bit value, which represents device information as defined in the register model in *5.4.2*.

Query form 1:	STATus:QUEStionable:CONDition?
Query form 2:	STATus:QUEStionable:EVENt?
Query form 3:	STATus:QUEStionable?
Examples:	
STAT:QUES? --> 3072	Reads the event register. This value tells, that bits 10 and 11 are set and according to the register model this is interpreted as “remote control = active” and “DC input/output = on”.
STAT:QUES:COND?	Reads the condition register of the questionable status register. The value contains the current snapshot of a number of status bits.

5.4.2.2 STATus:QUEStionable:ENABle␣<NR1>

This command sets or read the Enable register of the Questionable status register. The Enable register is a filter that enables all or single bits to signalise an event to the status byte STB. By default, all bits of the Enable register are set. In case you want to ignore certain bits, you just need to add the values of the remaining bits and send the value to the Enable register.

Query form:	STATus:QUEStionable:ENABle?
Value range:	0...32767
Example:	
STAT:QUES:ENAB␣3072	Sets the enable register of the questionable status registers to 3072 and enables the bits „OVP“, „OT“, „Remote“ and „Input/Output on“ for event reporting to STB.

5.4.2.3 STATus:OPERation?

Reads the Operation status EVENT or CONDITION register. The device will return a 16 bit value, which represents device information as defined in the register model in *5.4.2*.

Query form 1:	STATus:OPERation:CONDition?
Query form 2:	STATus:OPERation:EVENt?
Query form 2:	STATus:OPERation?
Examples:	
STAT:OPER? --> 256	Reads the operation register (identical to :EVENt?). A possible response would be a value of 256, which tells, that bit 8 is set and according to the register model bit 8 signalises, that „CV“ (constant voltage regulation) is active.
STAT:OPER:COND?	Reads the condition register of the operation status registers.

5.4.2.4 STATus:OPERation:ENABle␣<NR1>

Sets or reads the Enable register of the Questionable status register. The Enable register is a filter. It enables single or all bit of the condition registers to change the corresponding bit in the event register. This also impacts the summary bit in the status byte STB. By default, all bits of the Enable register are set to 1. If you want to use only some specific bits to be left through, just add their bit values (see register model) and send the total to the Enable register.

Query form:	STATus:OPERation:ENABle?
Value range:	0, 256...3840
Example:	
STAT:OPER:ENAB␣1792	Sets the Enable register of the Operation register to value 1792 and enables bits „CV“, „CC“ and „CP“ for reporting events to the STB.

5.4.2.5 Further status registers

The 10000s series require additional alarm bits which led to the addition of a second questionable register which has these new alarms. See the register model above. There are also additional command for that new register which have the same use and function as the commands described in *5.4.2.1* to *5.4.2.4*. For details refer to these section. It also means, that so only the 10000s series support the extra commands:

STATus:SECond:QUEStionable?

STATus:SECond:QUEStionable:ENABle?

STATus:SECond:QUEStionable:ENABle␣<NR1>

STATus:SECond:QUEStionable:CONDition?

STATus:SECond:QUEStionable:EVENt?

5.4.3 Set value commands

> *All values which have dedicated commands are not only limited by the rated values of your particular device model, but additionally limited by adjustment limits, as definable in the setup menu or by additional commands in remote control.*

5.4.3.1 [SOURce:]VOLTage␣<NR2>

Sets the input or output voltage limit of the device within a certain range, which is either defined by adjustment limits ("Limits", where featured) or is 0...102% nominal value, or reads the last setting. Alternatively, parameters MIN or MAX can be used to instantly set the voltage to the adjustable MINimum or MAXimum.

Query form:	[SOURce:]VOLTage?
Value range:	<NRf> = 0...1.02 * nominal voltage (according to technical specs)
Examples:	
VOLT 12	Absolute short form. Sets 12 V.
SOUR:VOLTAGE␣24.5V	Mixed form short/long, with unit. Sets 24.5 V, unless the voltage adjustment range has been limited otherwise.
SOURCE:VOLTAGE␣MIN	Sets the voltage to the defined minimum, usually 0 V.

5.4.3.2 [SOURce:]CURRent␣<NR2>

Sets the input or output current limit of the device within a certain range, which is either defined by adjustment limits ("Limits", where featured) or is 0...102% nominal value, or reads the last setting. Alternatively, parameters MIN or MAX can be used to instantly set the current to the adjustable MINimum or MAXimum. With bidirectional devices this command belongs to the source mode.

Query form:	[SOURce:]CURRent?
Value range:	<NRf> = 0...1.02 * nominal current (according to technical specs)
Example:	
CURR␣170	Absolute short form. Sets 170 A.
SOUR:CURRENT␣45.3A	Mixed form short/long, with unit. Sets 45.3 A, unless the adjustment range of the current has been limited otherwise.
SOURCE:CURRENT␣MAX	Sets the current to the defined maximum, which is either 102% of the rated current of the device or, if existing for the particular device, to the value of adjustment limit "I-max" (also see *5.4.8*).

5.4.3.3 [SOURce:]POWer␣<NR3>

> *Not available with series PS 2000 B TFT, which has an indirect power limitation system.*

Sets the input or output power limit of the device within a certain range, which is either defined by adjustment limits ("Limits", where featured) or is 0...102% nominal value, or reads the last setting. Alternatively, parameters MIN or MAX can be used to instantly set the power to zero (MINimum) or MAXimum. With bidirectional devices this command belongs to the source mode.

Query form:	[SOURce:]POWer?
Value range:	<NRf> = 0...1.02 * nominal power (according to technical specs)
Examples:	
POW␣3000	Absolute short form. Sets 3000 W, unless the power adjustment range has been limited otherwise.
SOUR:POWER␣3.5kW	Mixed form short/long, with unit and magnitude Kilo. Sets 3.5 kW or 3500 W, unless the adjustment range of the power has been limited otherwise.
SOURCE:POWER␣MIN	Sets the power to the defined minimum, which is usually 0 W.

5.4.3.4 [SOURce:]RESistance␣<NR2>

ELR9	ELR5	PS9	PSI9	PSI5	PSE	DT	PST	PSIT	EL3	PSB	PSBE	PS3	PS2	PS1	PSI1	PSB1	PSBE1	ELR1
✓	–	–	✓	–	–	✓	–	✓	✓	✓	–	–	–	–	✓	✓	–	✓

With electronic load devices, this command will set the input resistance value in Ohm within a defined range, as it can be adjusted on the front panel. Regular power supplies with internal resistance feature or bidirectional ones in source mode use this value to simulate an internal resistor in series to the output, where the output voltage differs from the adjusted value by an amount that calculates from the adjusted resistance value and actual output current. The way of setting the resistance value on both device types is identical. The adjustable range can be limited with an upper adjustment limit. Alternatively, parameters MIN or MAX can be used to instantly set the resistance to the adjustable MINimum or MAXimum. With bidirectional devices this command belongs to the source mode.

Query form: [SOURce:]RESistance?

Value range: <NRf> = Min. resistance...max. resistance, according to technical specs

Examples:

RES? Absolute short form. Queries the currently set resistance value.

SOUR:RESISTANCE␣10 Mixed form short/long. Sets 10 Ω.

SOURCE:RES␣MIN Sets the resistance to the minimum defined for the particular device model.

5.4.3.5 SINK:CURRent␣<NR2>

ELR9	ELR5	PS9	PSI9	PSI5	PSE	DT	PST	PSIT	EL3	PSB	PSBE	PS3	PS2	PS1	PSI1	PSB1	PSBE1	ELR1
–	–	–	–	–	–	–	–	–	–	✓	✓	–	–	–	–	✓	✓	–

This command is only available for the bidirectional devices of the PSB series and sets the set value of current for the so-called sink mode, which is separate from source mode (see *5.4.3.2*).

Contrary to the "normal" CURRent command, the main system SINK isn't optional, because the device could else not distinguish. The adjustment limits also apply, but for this separate set value there are also the separate limits "Sink: I-min" and "Sink: I-max", as adjustable on the HMI, as well as the corresponding commands (see *5.4.8*). Alternatively, parameters MIN or MAX can be used to instantly set the current to the adjustable MINimum or MAXimum.

Query form: SINK:CURRent?

Value range: <NRf> = I-min...I-max

Examples:

SINK:CURR␣120 Unless the adjustment limits restrict the setting, this will set the set value of current for the sink mode of a PSB to 120 A. This value can only become effective when the device changes into sink mode.

SINK:CURR␣MIN Set the sink mode set value of current to the level as defined by I-min.

5.4.3.6 SINK:POWer␣<NR3>

ELR9	ELR5	PS9	PSI9	PSI5	PSE	DT	PST	PSIT	EL3	PSB	PSBE	PS3	PS2	PS1	PSI1	PSB1	PSBE1	ELR1
–	–	–	–	–	–	–	–	–	–	✓	✓	–	–	–	–	✓	✓	–

This command is only available with bidirectional power supplies and sets the power set value for the so-called sink mode, which is separate from the one of the source mode (see *5.4.3.3*).

Contrary to the "normal" POWer command, the main system SINK isn't optional, because the device could else not distinguish. The adjustment limits also apply, but for this separate set value there is also the separate limit "Sink: P-max", as adjustable on the HMI, as well as the corresponding command (see *5.4.8*). Alternatively, parameters MIN or MAX can be used to instantly set the power to the adjustable MINimum or MAXimum.

Query form: SINK:POWer?

Value range: <NRf> = 0...P-max

Examples:

SINK:POW␣4500 Unless the adjustment limit P-max restricts the setting, this will set the power for the sink mode of a PSB 9000 to 4500 W. This value can only become effective after the device has switched to sink mode.

SINK:POWER␣MIN Sets the power to 0 W.

5.4.3.7 SINK:RESistance␣<NR2>

ELR9	ELR5	PS9	PSI9	PSI5	PSE	DT	PST	PSIT	EL3	PSB	PSBE	PS3	PS2	PS1	PSI1	PSB1	PSBE1	ELR1
–	–	–	–	–	–	–	–	–	–	✓	✓	–	–	–	–	✓	✓	–

This command is only available with bidirectional power supplies and sets the resistance set value for the so-called sink mode, which is separate from the one of the source mode (see *5.4.3.4*).

Contrary to the "normal" RESistance command, the main system SINK isn't optional, because the device could else not distinguish. The adjustment limits also apply, but for this separate set value there is also the separate limit "Sink: R-max", as adjustable on the HMI, as well as the corresponding command (see *5.4.8*). Alternatively, parameters MIN or MAX can be used to instantly set the resistance to the adjustable MINimum or MAXimum.

Query form: SINK:RESistance?

Value range: <NRf> = min. adjustable resistance (see technical specs)...R-max

Examples:

SINK:RESISTANCE␣MIN — Sets the resistance set value for the sink mode to minimum as defined by the technical specifications, which varies from model to model. The ratings (or nominal values) can be queried from the device with further commands.

5.4.4 Measuring commands

Measuring commands return the last actual values which have been acquired by the device by either measurement (U, I) or calculation (P, R). These represent the last situation on the DC. Actual values are acquired asynchronously to the measuring commands. It means, the value or values are not measured in the moment of query.

Actual values are not necessarily identical to the corresponding set values. The device periodically acquires the actual values.

5.4.4.1 MEASure:[SCALar:]VOLTage[:DC]?

Queries the device to return the last measured DC input/output voltage value in Volt.

Example:

MEAS:VOLT? — Absolute short form. Queries the actual voltage. A response, which should be instantly coming from the device, will return a value between 0% and max. 125% of nominal device voltage, like for example “43.50V”. The number of decimal places in the returned value will be identical to the value format in the device display and varies from model to model.

5.4.4.2 MEASure:[SCALar:]CURRent[:DC]?

Queries the device to return the last measured DC input/output current value in Ampere.

> *With devices of series PSB and PSBE, the returned actual value could be either from source or sink mode. If the value is negative, it belongs to sink mode.*

Example:

MEASURE:CURRENT? — Queries the actual current only. A response, which should be instantly coming from the device, will return a value between 0% and max. 125% of nominal device current, for example “100.1A”. The number of decimal places in the returned value will be identical to the value format in the device display and varies from model to model.

5.4.4.3 MEASure:[SCALar:]POWer[:DC]?

Queries the device to return the last calculated DC input/output power value in Watts.

> *With devices of series PSB and PSBE, the returned actual value could be either from source or sink mode. If the value is negative, it belongs to sink mode.*

Example:

MEAS:POW? — Absolute short form. Queries the consumed (e-load) or supplied power (PSU). A response, which should be instantly coming from the device, will return a value between 0% and max. 125% of nominal device power, for example “2534W”. No matter how the actual power format is in the device’s display, here it will always be returned in Watts.

5.4.4.4 MEASure:[SCALar:]ARRay?

Queries the device to return the last measured or calculated actual values of voltage, current and power (in that sequence) , separated by commas and with unit and eventually magnitude.

> *With devices of series PSB and PSBE, the returned actual values could be either from source or sink mode. If a value is negative, it belongs to sink mode. Since only one of both modes can be active, the actual current and power would always be positive or negative at the same time.*

Example:

MEAS:ARR? — Absolute short form. A response, which should be instantly coming from the device, will return three values between 0% and max. 125% of nominal device values, for example “12.5V, 33.3A, 420W”

5.4.5 Status commands

Status commands are used to alter the status of the device in terms of activating remote control or switching the DC input/output, or to query the current status.

5.4.5.1 SYSTem:LOCK␣<B0>

This command is used to activate remote control of a device. Basically, remote control has to be activated first before you can send any command that changes device status or value. Once remote control has been activated via one of the digital interfaces, only that interface is in charge.

The activation of remote control can be refused by the device due to several reasons. It's usually replied in form of a SCPI error which is put into the SCPI error buffer. This buffer can be read with the error command (see *„5.4.5.4. SYSTem:ERRor?“*).

Query form: SYSTem:LOCK:OWNer?

Value range for set: ON, OFF

Value range for query: REMOTE, NONE, LOCAL

Examples:

SYST:LOCK␣ON — Absolute short form. Requests the device to switch to remote control. The device then usually indicates activated remote control either by a LED or a status text in the display.

SYSTEM:LOCK:OWNER? — Queries the lock owner regarding remote control. This can be used to verify whether the device has accepted the request to switch to remote control or not. It can return three different statuses:

REMOTE = Device is in remote control via any of the available interfaces

NONE = Device isn't in remote control

LOCAL = Device is in LOCAL condition, which denies or interrupts remote control. Usually actually manually on the device’s front panel

5.4.5.2 INPut␣<B0>

ELR9	ELR5	PS9	PSI9	PSI5	PSE	DT	PST	PSIT	EL3	PSB	PSBE	PS3	PS2	PS1	PSI1	PSB1	PSBE1	ELR1
✓	✓	–	–	–	–	✓(1	–	–	✓	–	–	–	–	–	–	–	–	✓

This command is used to switch the DC input of devices with an input, here: electronic loads, on or off.

Query form: INPut?

Value range: ON, OFF

Examples:

INP␣ON — Absolute short form. Switches the DC input on if remote control is active.

INPUT? — Queries the condition of the DC input, which will be returned as ON or OFF. Against all expectations, the input might be switched off due to a device alarm.

5.4.5.3 OUTPut␣<B0>

ELR9	ELR5	PS9	PSI9	PSI5	PSE	DT	PST	PSIT	EL3	PSB	PSBE	PS3	PS2	PS1	PSI1	PSB1	PSBE1	ELR1
–	–	✓	✓	✓	✓	✓(2	✓	✓	–	✓	✓	✓	✓	–	✓	✓	✓	–

This command is used to switch the DC output on or off with devices that have an output, like power supplies or bidirectional devices which are also considered as power supplies.

Query form: OUTPut?

Value range: ON, OFF

Examples:

OUTP␣ON — Absolute short form. Switches the DC output on if remote control is active.

OUTPUT? — Queries the condition of the DC output, which will be returned as ON or OFF.

1) Valid for EL 9000 DT
2) Valid for PSI 9000 DT

5.4.5.4 SYSTem:ERRor?

This commands is used to read a single error or all errors from the device's internal SCPI error queue. This queue only contains communication errors, such as about wrong syntax, excess values etc. It can not return any device alarm (one exception: SOVP). Also see section *„5.2.5. Communication and other errors“*. Device alarms can be queried from the device by reading bits of the status registers (see *„5.4.2. Status registers“*).

You can either chose to query the next error multiple times until it says “No error” or query all at once. After all errors have been read from the buffer, it will be purged.

The queue is of type FIFO (first in, first out). It means, that the first occurred error is returned first.

Query form 1:	SYSTem:ERRor?	Queries the next error
Query form 2:	SYSTem:ERRor:NEXT?	Queries the next error
Query form 3:	SYSTem:ERRor:ALL?	Queries all errors in the buffer (up to 5)

Example:

SYST:ERR?	Absolute short form. The device replies to this query with a string that first contains an error code (see error code list) and second an error description, for example: 0,“No error“. This is returned every time no error is present or after all error have been returned.
SYSTEM:ERROR:ALL?	This query will let the device return up to 5 concatenated errors in one string, separated by comma plus space.

Querying errors with SYST:ERR? also clears bits related to device alarms in register QUEStionable (see „5.4.2. Status registers“), but only if the alarm condition is "gone". This is considered as acknowledgment by the user. Alarms that have been acknowledged this way can then not be read from the register anymore.

5.4.6 Commands for protective features

Devices from EAEPS, like power supplies or electronic loads, feature a set of device alarms, partly for self-protection, partly for the protection of connected loads or sources. There is furthermore a supervision feature which can monitor DC input/output related values like voltage, current or power for exceeding adjustable limits and initiate user-definable actions like an acoustic alarm or shutdown of the DC input/output. The configuration of the supervision can be done manually in the actual user profile or by remote commands.

5.4.6.1 [SOURce:]VOLTage:PROTection[:LEVel]␣<NR2>

This command is connected to the adjustable value “OVP” (overvoltage protection). The value is adjustable between 0 and 110% nominal device voltage for most series, except for all EL 9000 series where it's only 0...103% (in doubt, check the technical specifications in the user manual). It defines a threshold where the device switches the DC input/output off, no matter if the device has generated a voltage higher than this threshold or any outside source. When controlling a source, i.e. power supply, this feature usually serves to protect the connected load from overvoltage and thus damage. This can occur if the output voltage is accidentally adjusted to a dangerous level.

A sink, i.e. an electronic load, can not be protected from overvoltage from outside, though it will switch off the DC input at this threshold.

Query form:	[SOURce:]VOLTage:PROTection[:LEVel]?
Value range:	0...1.1* or 1.03 * nominal voltage of the device
Examples:	
VOLT:PROT␣88	Absolute short form. Sets the OVP threshold to 88 V. At a model with 80 V nominal voltage, this is 110% of the maximum voltage (not with EL 9000 series) and also the maximum OVP value.

5.4.6.2 [SOURce:]CURRent:PROTection[:LEVel]␣<NR2>

This command is connected to the adjustable value “OCP” (overcurrent protection, see SETTINGS menu on the device front panel). The value is adjustable between 0 and 110% nominal device current. It defines a threshold where the device switches the DC input/output off. With sinks, like an electronic load is one, it usually suffices to protect the source from too high current consumption. Once the input/output current reaches the threshold, the device will instantly switch the DC input/output off. The threshold is only effective if it's adjusted to a lower value than the input/output current, because else the device would just limit the current, but not switch off. If current value and overcurrent protection are adjusted to the same value, the OCP has priority and will switch off rather than limit.

Query form:	[SOURce:]CURRent:PROTection[:LEVel]?
Value range:	0...1.1 * nominal current of the device
Example:	
CURR:PROT␣100	Absolute short form. Sets the OCP threshold to 100 A.

5.4.6.3 [SOURce:]POWer:PROTection[:LEVel]␣<NR3>

This command is connected to the adjustable value “OPP” (overpower protection, see SETTINGS menu on the device front panel). The value is adjustable between 0 and 110% nominal device power. It defines a threshold where the device switches the DC input/output off. This feature shall help to protect a source or load from exceeding a certain power output or consumption, regardless of voltage and current. Once the input/output power reaches the threshold, the device will instantly switch the DC input/output off. The threshold is only effective if it's adjusted to a lower value than the input/output power, because else the device will just limit the power, but not switch off. If power value and overpower protection are adjusted to the same value, the OPP has priority and will switch off rather than limit.

Query form:	[SOURce:]POWer:PROTection[:LEVel]?
Value range:	0...1.1 * nominal power of the device
Example:	
POW:PROT␣1.5kW	Absolute short form. Sets the OPP threshold to 1.5 kW.

5.4.6.4 SINK:CURRent:PROTection[:LEVel]␣<NR2>

ELR9	ELR5	PS9	PSI9	PSI5	PSE	DT	PST	PSIT	EL3	PSB	PSBE	PS3	PS2	PS1	PSI1	PSB1	PSBE1	ELR1
–	–	–	–	–	–	–	–	–	–	✓	✓	–	–	–	–	✓	✓	–

This command is only available with bidirectional power supplies and sets the so-called OCP threshold for the sink mode, which is separate from the OCP threshold of the source mode (see *5.4.6.2*).

Contrary to the command for the source mode, the main system SINK is here not optional, because the device could else not distinguish. No adjustment limits. Alternatively, parameters MIN or MAX can be used to instantly set the threshold to the adjustable MINimum or MAXimum.

Query form: SINK:CURRent:PROTection[:LEVel]?

Value range: <NRf> = 0...1.1 * nominal current of the device

Examples:

SINK:CURR:PROT␣MAX Absolute short form. Sets the OCP threshold to 110% of nominal current

5.4.6.5 SINK:POWer:PROTection[:LEVel]␣<NR3>

ELR9	ELR5	PS9	PSI9	PSI5	PSE	DT	PST	PSIT	EL3	PSB	PSBE	PS3	PS2	PS1	PSI1	PSB1	PSBE1	ELR1
–	–	–	–	–	–	–	–	–	–	✓	✓	–	–	–	–	✓	✓	–

This command is only available with bidirectional power supplies and sets the so-called OPP threshold for the sink mode, which is separate from the OPP threshold of the source mode (see *5.4.6.2*).

Contrary to the command for the source mode, the main system SINK is here not optional, because the device could else not distinguish. No adjustment limits. Alternatively, parameters MIN or MAX can be used to instantly set the threshold to the adjustable MINimum or MAXimum.

Query form: SINK:POWer:PROTection[:LEVel]?

Value range: <NRf> = 0...1.1 * nominal power of the device

Examples:

SINK:POWER:PROT␣3000 Sets the OPP threshold to 3000 W, if the device has at least 3000 W rated power.

5.4.7 Commands for supervision features

ELR9	ELR5	PS9	PSI9	PSI5	PSE	DT	PST	PSIT	EL3	PSB	PSBE	PS3	PS2	PS1	PSI1	PSB1	PSBE1	ELR1
✓	–	–	✓	–	–	✓	–	✓	–	✓	–	–	–	–	✓	✓	–	✓

The commands below enable the remote configuration of the supervision features ("Events", where featured) of the device, which are related to voltage, current or power on the DC input or DC output.

With series PSB and PSBE these commands are only for supervision of the so-called source mode. For sink mode supervision see below at 5.4.7.1.

Command	Description
SYSTem:CONFig:UVD[?]␣<NR2> **SYSTem:CONFig:UVD:ACTion[?]␣{NONE | SIGNal | WARNing | ALARm}**	Identical to event UVD, as configurable in the device menu
SYSTem:CONFig:UCD[?]␣<NR2> **SYSTem:CONFig:UCD:ACTion[?]␣{NONE | SIGNal | WARNing | ALARm}**	Identical to event UCD, as configurable in the device menu
SYSTem:CONFig:OVD[?]␣<NR2> **SYSTem:CONFig:OVD:ACTion[?]␣{NONE | SIGNal | WARNing | ALARm}**	Identical to event OVD, as configurable in the device menu
SYSTem:CONFig:OCD[?]␣<NR2> **SYSTem:CONFig:OCD:ACTion[?]␣{NONE | SIGNal | WARNing | ALARm}**	Identical to event OCD as configurable uin the device menu
SYSTem:CONFig:OPD[?] <NR3> **SYSTem:CONFig:OPD:ACTion[?]␣{NONE | SIGNal | WARNing | ALARm}**	Identical to event OPD, as configurable in the device menu

The **:ACTion** can have following parameters (also see the device's operation guide):

NONE = Event inactive, no supervision

SIGNAL = As soon as the event occurs, a status text is presented in the status field of the device display or a bit in the Questionable Register (STAT:QUES?) is set (see *„5.4.2. Status registers“*). The bit indicates, that a specific event has occurred. This can be used to record the event.

WARNING = As soon as the event occurs, a warning pop-up is presented in the device display or a bit in the Questionable Register (STAT:QUES?) is set (see *„5.4.2. Status registers“*). The bit indicates, that a specific event has occurred. This can be used to record the event.

ALARM = As soon as the event occurs, a warning pop-up is presented in the device display, as well as an acoustic alarm is initiated and the DC input/output is switched off or a bit in the Questionable Register (STAT:QUES?) is set (see *„5.4.2. Status registers“*). The bit indicates, that a specific event has occurred. This can be used to record the event.

The action ALARM lets the device act similar to when device alarms occur. However, device alarm still have priority. It means, that if, for example, the values OVP and OVD would be equal and the input/output voltage reaches that level, the device would initiate an OV alarm rather than an OVD event.

5.4.7.1 Further commands

ELR9	ELR5	PS9	PSI9	PSI5	PSE	DT	PST	PSIT	EL3	PSB	PSBE	PS3	PS2	PS1	PSI1	PSB1	PSBE1	ELR1
–	–	–	–	–	–	–	–	–	–	✓	–	–	–	–	–	✓	–	–

The below commands are only for the supervision (events) in the sink mode of the PSB series and use the additional subsystem **:SINK** for distinction.

Command	Description
SYSTem:SINK:CONFig:UCD[?]␣<NR2> **SYSTem:SINK:CONFig:UCD:ACTion[?]␣{NONE | SIGNal | WARNing | ALARm}**	Identical to event setting "Sink: UCD", as configurable in the device menu
SYSTem:SINK:CONFig:OCD[?]␣<NR2> **SYSTem:SINK:CONFig:OCD:ACTion[?]␣{NONE | SIGNal | WARNing | ALARm}**	Identical to event setting "Sink: OCD" as configurable in the device menu
SYSTem:SINK:CONFig:OPD[?]␣<NR3> **SYSTem:SINK:CONFig:OPD:ACTion[?]␣{NONE | SIGNal | WARNing | ALARm}**	Identical to event setting "Sink: OPD", as configurable in the device menu

5.4.8 Commands for adjustment limits

Adjustment limits are additional, globally effective, adjustable limits for the set values U, I, P and R (where featured). The purpose is to narrow the standard 0...102% adjustment range and to prevent, for example, to accidently set a too high voltage for the load. There is also the overvoltage protection (OVP), but it's generally better to block irregular set values in the first place.

In case a set value is sent to the device that would exceed an adjustment limit, no matter if too high or too low, the device will ignore it and put an error into the error queue. At the same time it's impossible to set the lower adjustment limit (:LOW) higher than the related set value or, vice versa, the upper adjustment limit.

These commands are connected to the "Limits" setting as you can adjust them in the setup menu of your device (were featured). Also refer to the user manuals of the devices for details.

Command	ELR9	ELR5	PS9	PSI9	PSI5	PSE	DT	PST	PSIT	EL3	PSB	PSBE	PS3	PS2	PS1	PSi1	PSB1	PSBE1	ELR1
[SOURce:]VOLTage:LIMit:LOW[?]␣<NR2> Identical to value U-min, as configurable at the device	✓	✓	✓	✓	—	✓	✓	✓	✓	✓	✓	✓	✓	✓	✓	✓	✓	✓	✓
[SOURce:]VOLTage:LIMit:HIGH[?]␣<NR2> Identical to value U-max, as configurable at the device	✓	✓	✓	✓	—	✓	✓	✓	✓	✓	✓	✓	✓	✓	✓	✓	✓	✓	✓
[SOURce:]CURRent:LIMit:LOW[?]␣<NR2> Identical to value I-min, as configurable at the device	✓	✓	✓	✓	—	✓	✓	✓	✓	✓	✓	✓	✓	✓	✓	✓	✓	✓	✓
[SOURce:]CURRent:LIMit:HIGH[?]␣<NR2> Identical to value I-max, as configurable at the device	✓	✓	✓	✓	—	✓	✓	✓	✓	✓	✓	✓	✓	✓	✓	✓	✓	✓	✓
[SOURce:]POWer:LIMit:HIGH[?]␣<NR3>[Unit Identical to value P-max, as configurable at the device	✓	✓	✓	✓	—	✓	✓	✓	✓	✓	✓	✓	✓	—	✓	✓	✓	✓	✓
[SOURce:]RESistance:LIMit:HIGH[?]␣<NR2> Identical to value R-max, as configurable at the device	✓	✓	—	✓	—	—	✓	—	✓	✓	✓	—	—	—	—	✓	✓	✓	✓
SINK:CURRent:LIMit:LOW[?]␣<NR2> Identical to value "Sink: I-min", as configurable at the device	—	—	—	—	—	—	—	—	—	—	✓	✓	—	—	—	—	✓	✓	—
SINK:CURRent:LIMit:HIGH[?]␣<NR2> Identical to value "Sink: I-max", as configurable at the device	—	—	—	—	—	—	—	—	—	—	✓	✓	—	—	—	—	✓	✓	—
SINK:POWer:LIMit:HIGH[?]␣<NR3> Identical to value "Sink: P-max", as configurable at the device	—	—	—	—	—	—	—	—	—	—	✓	✓	—	—	—	—	✓	✓	—
SINK:RESistance:LIMit:HIGH[?]␣<NR2> Identical to value "Sink: R-max", as configurable at the device	—	—	—	—	—	—	—	—	—	—	✓	✓	—	—	—	—	✓	✓	—

5.4.9 Commands for master-slave operation

ELR9	ELR5	PS9	PSI9	PSI5	PSE	DT	PST	PSIT	EL3	PSB	PSBE	PS3	PS2	PS1	PSI1	PSB1	PSBE1	ELR1
✓	–	–	✓	–	✓	–	–	–	–	✓	✓	–	–	✓	✓	✓	✓	✓

The commands, as listed below, are used to remotely configure and control the master-slave mode (short: MS). The commands are connected to the related settings in the device setup menu. For details about MS refer to the device's operation manual.

Configuration and control require a certain procedure, as depicted by the list of commands below. Alternatively, the entire MS configuration could also be done on the HMI of the devices.

5.4.9.1 Configuration commands

Command	Description
SYSTem:MS:ENABle␣{ON | OFF}	Enables (ON) or disables (OFF) master-slave (MS) mode
SYSTem:MS:ENABle?	Queries, whether the MS is enabled or not
SYSTem:MS:LINK␣{MASTER | SLAVE} **SYSTem:MS:LINK?**	Defines or queries the role of the device in the MS system: **MASTER** = Device will be master unit **SLAVE** = Device will be slave unit (will also be returned when MS is not enabled)
SYSTem:MS:INITialisation	Starts the MS initialisation with the given settings. Also refer to the devices's operating manual. After a successful initialisation, the MS mode can be controlled with further commands. To test if the init has been successful, the next command can be used:
SYSTem:MS:CONDition?	Queries the result of a former MS init. Possible return values: **INIT** = Init was successful **NO INIT** = Init was not successful An init is also successful if there is only a master. In order to find out whether you have a complete MS system available or not, you would have to query the number of initialised units from the master with command **SYST:MS:UNITS?** (see below). Any value other than 0 means, the MS system is initialised and available for control.
SYSTem:MS:UNITs?	Queries the number of units that have been initialised successfully. The number can differ from the expected value, if the master did not initialise one or multiple slaves due to any reason. If only the master has initialised itself, the command will return a 1. *Depending on the KE firmware installed on your device, the returned value may not include the master itself as an initialized device.*
SYSTem:SHARe:LINK␣{SLAVe} **SYSTem:SHARe:LINK?**	*This command is only valid for devices of series EL 9000 and ELR 9000 featuring a Share bus* This command is only used with electronic loads in two-quadrants operation (2Q) where they are supposed to be slaves on the Share bus, even if one load unit is master of a master-slave system of loads This only works if • the device is already set to MASTER for master-slave and • master-slave mode is activated and • the device is an electronic load, else the device will generate a "Settings conflict" error.
SYSTem:MS:TERMination␣{ON | OFF} **SYSTem:MS:TERMination?**	Exception: only supported by the 10000s series. This command is used to activate/deactivate the digital switch for the termination resistor on the master-slave bus.
SYSTem:MS:BIAS␣{ON | OFF} **SYSTem:MS:BIAS?**	Exception: only supported by the 10000s series. This command is used to activate/deactivate the digital switch for the additional BIAS resistors on the master-slave bus. Note: The switch is automatically set to ON when the device is MS master.

5.4.9.2 Other MS commands

Since KE firmware 2.20 (9000s series) the rated values of a master-slave system are queried from the master using the commands for nominal value queries as listed in *5.4.10*. These also allow querying the total resistance of an MS system. The below listed commands thus might not be supported anymore by your device.

Command	Description
SYSTem:MS:NOMinal:VOLTage?	Queries the total voltage of the initialized MS system. This value will always be the same as with a single device.
SYSTem:MS:NOMinal:CURRent?	Queries the total current of the initialized MS system. The current of a MS system will increase in a parallel connection and multiply by the total number of units.
SYSTem:MS:NOMinal:POWer?	Queries the total power of the initialized MS system. The power of a MS system will increase in a parallel connection and multiply by the total number of units.

5.4.10 Commands for general queries

Here are commands listed that can be used to query other information from the device, which isn't used so often.

Command	ELR9	ELR5	PS9	PSI9	PSI5	PSE	DT	PST	PSIT	EL3	PSB	PSBE	PS3	PS2	PS1	PSI1	PSB1	PSBE1	ELR1
SYSTem:NOMinal:VOLTage? Queries the nominal, i.e. rated input/output voltage of a single device or an initialized master-slave system	✓	✓	✓	✓	✓	✓	✓	✓	✓	✓	✓	✓	✓	✓	✓	✓	✓	✓	✓
SYSTem:NOMinal:CURRent? Queries the nominal, i.e. rated input/output current of a single device or an initialized master-slave system	✓	✓	✓	✓	✓	✓	✓	✓	✓	✓	✓	✓	✓	✓	✓	✓	✓	✓	✓
SYSTem:NOMinal:POWer? Queries the nominal, i.e. rated input/output power of a single device or an initialized master-slave system	✓	✓	✓	✓	✓	✓	✓	✓	✓	✓	✓	✓	✓	✓	✓	✓	✓	✓	✓
SYSTem:NOMinal:RESistance:MINimum? Queries the minimum internal resistance value of a single device or an initialized master-slave system. This value is usually not zero with electronic loads.	✓	—	—	✓	—	—	✓	—	✓	✓	✓	—	—	—	—	✓	✓	✓	✓
SYSTem:NOMinal:RESistance:MAXimum? Queries the maximum internal resistance value of a single device or an initialized master-slave system	✓	—	—	✓	—	—	✓	—	✓	✓	✓	—	—	—	—	✓	✓	✓	✓
SYSTem:DEVice:CLASs? Queries the device class and returns a value which defines to what series the device belongs to. This is an easy way to distinguish different device series or types, like an electronic load from a power supply or battery charger. For a list of device classes see *„A1. Device classes“*	✓	✓	✓	✓	✓	✓	✓	✓	✓	✓	✓	✓	✓	✓	✓	✓	✓	✓	✓
DIAGnostic:INFormation:DEVice:OTIMe? Operation counter. Queries the operation time, i. e. the time the device is powered and runs. The returned value is in hours.	—	—	—	—	—	—	—	—	—	—	—	—	—	—	✓	✓	✓	✓	✓
DIAGnostic:INFormation:DEVice:ONTime? Operation counter. Queries the "on time", i. e. the time the device's DC output or input is switched on. The returned value is in hours.	—	—	—	—	—	—	—	—	—	—	—	—	—	—	✓	✓	✓	✓	✓
DIAGnostic:INFormation:DEVice:OFFTime? Operation counter. Queries the "off time", i. e. the time the device's DC output or input is switched off. The returned value is in hours.	—	—	—	—	—	—	—	—	—	—	—	—	—	—	✓	✓	✓	✓	✓

Command	ELR9	ELR5	PS9	PSI9	PSI5	PSE	DT	PST	PSIT	EL3	PSB	PSBE	PS3	PS2	PS1	PSI1	PSB1	PSBE1	ELR1
FETCh:AHOur? Operation counter. Queries the ampere hours the device has either supplied or consumed during "on time", depending of the type. With bidirectional power supplies, the value is only connected to source mode. The returned value is in Ah.	—	—	—	—	—	—	—	—	—	—	—	—	—	—	✓	✓	✓	✓	✓
FETCh:WHOur? Operation counter. Queries the watt hours the device has either supplied or consumed during "on time", depending of the type. With bidirectional power supplies, the value is only connected to source mode. The returned value is in kWh.	—	—	—	—	—	—	—	—	—	—	—	—	—	—	✓	✓	✓	✓	✓
FETCh:SINK:AHOur? Operation counter. This command is only available with bidirectional power supplies. It queries the ampere hours the device has either consumed in sink mode, during "on time". The returned value is in Ah.	—	—	—	—	—	—	—	—	—	—	—	—	—	—	—	—	✓	✓	—
FETCh:SINK:WHOur? Operation counter. This command is only available with bidirectional power supplies. It queries the watt hours the device has either consumed in sink mode, during "on time". The returned value is in kWh.	—	—	—	—	—	—	—	—	—	—	—	—	—	—	—	—	✓	✓	—

5.4.11 Commands for device configuration

The commands as listed below are used to modify settings of the device configuration. The settings can be part of the current user profile (see device's operating manual). Any modification on the configuration requires activated remote control. These settings are automatically stored.

Command	ELR9	ELR5	PS9	PSI9	PSI5	PSE	DT	PST	PSIT	EL3	PSB	PSBE	PS3	PS2	10K
POWer:STAGe:AFTer:REMote␣{ AUTO | OFF } **POWer:STAGe:AFTer:REMote?** Defines, how the DC input/output of the device shall be after leaving remote control. **AUTO** = Last condition remains **OFF** = DC input/output will be switched off	✓	—	✓	✓	✓	✓	✓	✓	✓	✓	✓	✓	✓	—	✓
[SOURce:]VOLTage:CONTrol:SPEed␣{FAST | SLOW} **[SOURce:]VOLTage:CONTrol:SPEed?** This command is used to switch the internal voltage regulator of the power stage(s) of electronic loads or devices which can work as electronic load between FAST and SLOW (default) mode.	✓	—	—	—	—	—	—	—	—	✓	—	—	—	—	✓
SYSTem:CONFig:CONTroller:SPEed␣{FAST | SLOW | NORMal} **SYSTem:CONFig:CONTroller:SPEed?** Extension for the 10000 series: three speeds. NORMAL equals to what the devices of 10000 series had before this switsch was introduced.	—	—	—	—	—	—	—	—	—	—	—	—	—	—	✓
SYSTem:CONFig:INPut:RESTore[?]␣{AUTO | OFF} **SYSTem:CONFig:OUTPut:RESTore[?]␣{AUTO | OFF}** Defines the condition of DC input/output after the device is powered. This is connected to the device setting "**DC input after power on**" or "**DC output after power on**". **AUTO** = DC input/output will be restored to the condition it had when switching the device off the last time **OFF** = DC input/output will always be off	✓	✓	✓	✓	✓	✓	✓	✓	✓	✓	✓	✓	✓	—	✓
SYSTem:CONFig:USER:TEXT␣<SRD> **SYSTem:CONFig:USER:TEXT?** Writes or queries a user-definable text of up to 40 ASCII characters permanently to the device. This string can be used to add custom information to the unit in order to distinguish it from other identical models, alternatively to the serial number.	✓	✓	✓	✓	✓	✓	✓	✓	✓	✓	✓	✓	✓	✓	✓
SYSTem:CONFig:ANALog:MONitor␣{DEFault | EL | PS | ELPS | PSEL | COMBination} **SYSTem:CONFig:ANALog:MONitor?** Configures the monitor pins 9 (VMON) and 10 (CMON). **DEFault** = VMON signals actual voltage, CMON signals actual current of source or sink mode **EL** = Pin 10 only signals the actual current of sink mode **PS** = Pin 10 only signals the actual current of source mode **ELPS** = Pin 9 signal the actual current of sink mode, pin 10 the one of source mode **PSEL** = Inversion of **ELPS** setting **COMBination** = Pin 10 signals the current of source and sink mode, separating the signal range in two parts as -100%...0...100%. For more see device manual.	—	—	—	—	—	—	—	—	—	—	✓	✓	—	—	✓ (1
SYSTem:CONFig:ANALog:PIN6␣{OT | PF | ALL} **SYSTem:CONFig:ANALog:PIN6?** Defines what device alarms are signaled on pin 6. **OT** = Pin 6 only signals **O**ver**T**emperature **PF** = Pin 6 only signals **P**ower **F**ail **All** = Pin 6 signals both (default)	✓	—	✓	✓	✓	✓	✓	✓	✓	✓	✓	✓	✓	—	✓

1) Exception: Command available for bidirectional series PSB and PSBE only

Command	ELR9	ELR5	PS9	PSI9	PSI5	PSE	DT	PST	PSIT	EL3	PSB	PSBE	PS3	PS2	10K
SYSTem:CONFig:ANALog:PIN14␣{OVP | OCP | OPP | OVP/OCP | OVP/OPP | OCP/OPP | ALL} **SYSTem:CONFig:ANALog:PIN14?** Defines what device alarms are signaled on pin 14. There are options to signal the three device alarms **OVP**, **OCP** and **OPP** separately or as combination of two or signal all (logical OR)..	✓	—	✓	✓	✓	✓	✓	✓	✓	✓	✓	✓	✓	—	✓
SYSTem:CONFig:ANALog:PIN15␣{CONT | POW} **SYSTem:CONFig:ANALog:PIN15?** Defines what status is signaled on pin 15. **CONT** = Regulation mode CV (default) **POW** = DC terminal on/off	✓	—	✓	✓	✓	✓	✓	✓	✓	✓	✓	✓	✓	—	✓
SYSTem:CONFig:ANALog:REFerence␣{5 | 10} **SYSTem:CONFig:ANALog:REFerence?** Selects the voltage range for analog inputs and outputs of the analog interface. This has no effect on anything concerning digital remote control. **5** = 0...5 V range **10** = 0...10 V range (factory setting)	✓	—	✓	✓	✓	✓	✓	✓	✓	✓	✓	✓	✓	—	✓
SYSTem:CONFig:ANALog:REMSB:LEVel␣{NORMal | INVerted} **SYSTem:CONFig:ANALog:REMSB:LEVel?** Determines how pin REM-SB of the analog interface (see device manual) shall be interpreted by the device: **NORMAL** = level and conditions as described in the manual (factory setting) **INVERTED** = level and conditions are interpreted as inverted	✓	—	✓	✓	✓	✓	✓	✓	✓	✓	✓	✓	✓	—	✓
SYSTem:CONFig:ANALog:REMSB:ACTion␣{OFF | AUTO} **SYSTem:CONFig:ANALog:REMSB:ACTion?** Determines the action that is caused by using pin REM-SB of the analog interface in connection with DC input/output of the device: **OFF** = pin can only be used to switch the DC input/output off **AUTO** = pin can be used to switch off and on again, if the DC input/output was at least switched on once by pushbutton on the control panel or digital command	✓	—	✓	✓	✓	✓	✓	✓	✓	✓	✓	✓	✓	—	✓
SYSTem:CONFig:MODe␣{UIP | UIR} **SYSTem:CONFig:MODe?** Selects the operation mode between U/I/P and U/I/R. Both modes are available for electronic loads and also on select power supplies. By selecting U/I/R, the adjustable resistance value (command **[SOURce:]RESistance** or **SINK:RESistance**) is unlocked. Activated U/I/R mode can only be detected in the display from the resistance value being shown.	✓	—	—	✓	—	—	✓	—	✓	✓	✓	—	—	—	✓ (1
SYSTem:CONFig:SEMif47␣{DISable | ENAble} **SYSTem:CONFig:SEMif47?** Enables or diasbles a feature called SEMIF47 which is standard with units produced after approx. 04/2022. Also see the updated user manual of approx. 04/2022 for details about this feature.	—	—	—	—	—	—	—	—	—	—	—	—	—	—	✓
SYSTem:COMMunicate:PROTocol:MODBus␣{ENABle | DISable} **SYSTem:COMMunicate:PROTocol:MODBus?** Enables or disables ModBus protocol on the device. This setting is stored. After disabling ModBus with this command, further ModBus messages are ignored, so that only SCPI commands are accepted. Only one of both protocols can be deactivated at the same time.	✓	✓	✓	✓	✓	✓	✓	✓	✓	✓	✓	✓	✓	—	✓

1) Exception: Command not available with PS 10000 series

Command	ELR9	ELR5	PS9	PSI9	PSI5	PSE	DT	PST	PSIT	EL3	PSB	PSBE	PS3	PS2	10K
SYSTem:COMMunicate:TIMeout␣<NR1> **SYSTem:COMMunicate:TIMeout?** Defines a timeout in milliseconds (range: 5...65535, factory setting: 5) that can elapse between two consecutive bytes in a serial transfer (USB, RS232) before the device considers the message as interrupted and discards it. For details refer to section *3.6.*	✓	—	✓	✓	✓	✓	✓	✓	✓	✓	✓	✓	✓	—	✓
SYSTem:COMMunicate:MONitoring:TIMeout␣<NR1> **SYSTem:COMMunicate:MONitoring:TIMeout?** Defines a timeout in seconds (range: 1...36000, factory setting: 5) for the so-called "interface monitoring" feature. Refer to the latest issue of the device manual for more information or contact support staff. In case the latest available manual on our website still doesn't contain a paragraph about this feature, refer to another series' manual.	✓	—	✓	✓	✓	✓	✓	✓	✓	✓	✓	✓	✓	—	✓
SYSTem:COMMunicate:MONitoring:ACTion␣{ON | OFF} **SYSTem:COMMunicate:MONitoring:ACTion?** Enables/disables the "interface monitoring" feature, also called "connection timeout" (short: CTO). This is an automatically saved setting. The actual monitoring via the timeout starts in the moment when a connection to the device via any digital interface is established. Also see the other command one row above. Once the time runs out, the described action is triggered and bit CTO in status register STAT:OPER is set. **ON** = Enables the feature **OFF** = Disables the feature (default setting after device reset)	✓	—	✓	✓	✓	✓	✓	✓	✓	✓	✓	✓	✓	—	✓
SYSTem:ALARm:ACTion:PFAil␣{ AUTO | OFF } **SYSTem:ALARm:ACTion:PFAil?** Defines, how the DC input/output of the device shall be after a power fail (PF) alarm, which could be a mains blackout or similar and after which the device could continue its work automatically. **AUTO** = DC input/output condition before PF is restored **OFF** = DC input/output remains switched off (default setting)	✓	✓	✓	✓	✓	✓	✓	✓	✓	✓	✓	✓	✓	—	✓
SYSTem:ALARm:ACTion:OTEMperature␣{ AUTO | OFF } **SYSTem:ALARm:ACTion:OTEMperature?** Defines, how the DC input/output of the device shall be after the device has recovered, i. e. cooled down after an overtemperature (OT) alarm. **AUTO** = DC input/output condition before OT is restored (default setting) **OFF** = DC input/output will remain switched off	✓	—	✓	✓	✓	✓	✓	✓	✓	✓	✓	✓	✓	—	✓

5.4.11.1 Commands for Anybus module settings

ELR9	ELR5	PS9	PSI9	PSI5	PSE	DT	PST	PSIT	EL3	PSB	PSBE	PS3	PS2	PS1	PSI1	PSB1	PSBE1	ELR1
✓	–	–	✓	–	✓	–	–	–	–	✓	✓	–	–	✓	✓	✓	✓	✓

Most of the Anybus interface modules can also be remotely configured using SCPI commands, either via USB port or even via the interface itself. These settings are always saved automatically.

Command	Description
SYSTem:COMMunicate:INTerface:CODe?	Returns a value, representing a model code for the installed Anybus interface module: 5 = Profibus 9 = RS232 16 = CANopen 18 = ModBus TCP 1P 19 = Profinet/IO 1P 20 = Ethernet 1P 21 = Ethernet 2P 22 = ModBus TCP 2P 23 = Profinet/IO 2P 25 = CAN 26 = EtherCAT 255 = no module
SYSTem:COMMunicate:INTerface:TYPe?	Queries the name of the installed Anybus interface module.
SYSTem:COMMunicate:INTerface:SERial?	Queries the serial number of the installed Anybus interface module.
SYSTem:COMMunicate:INTerface:ADDRess␣<NR1> **SYSTem:COMMunicate:INTerface:ADDRess?**	Sets the device address of the Profibus module IF-AB-PBUS or CANopen module IF-AB-CANO or queries it. Allowed range for Profibus: 1...125 Allowed range for CANopen: 1...127
SYSTem:COMMunicate:PROFibus:ID?	Queries the Profibus ID of the device manufacturer.
SYSTem:COMMunicate:PROFibus:FTAG␣<SRD> **SYSTem:COMMunicate:PROFibus:FTAG?**	Sets or queries the Profibus/Profinet specific „function tag“, a string of up to 32 characters
SYSTem:COMMunicate:PROFibus:LTAG␣<SRD> **SYSTem:COMMunicate:PROFibus:LTAG?**	Sets or queries the Profibus/Profinet specific „location tag“, a string of up to 22 characters
SYSTem:COMMunicate:PROFibus:DATe␣<SRD> **SYSTem:COMMunicate:PROFibus:DATe?**	Sets or queries the Profibus/Profinet specific „date tag“, a date/time string of up to 40 characters
SYSTem:COMMunicate:PROFibus:DESCription␣<SRD> **SYSTem:COMMunicate:PROFibus:DESCription?**	Sets or queries the Profibus/Profinet specific „description“ tag, a string of up to 54 characters
SYSTem:COMMunicate:PROFibus:NAMe␣<SRD> **SYSTem:COMMunicate:PROFibus:NAMe?**	Sets or queries the „station name”, a string of up to 200 characters
SYSTem:COMMunicate:INTerface:BAUD␣<NR1> **SYSTem:COMMunicate:INTerface:BAUD?**	Queries or sets the bus speed, i.e. baud rate of a CANopen or RS232 interface module. The device will only save the value. This means, with value 3 being saved and CANopen installed, it will run at 100 kbps and with RS232 installed, with 19200 Baud. **Value** / **CANopen** / **CAN** / **RS232** 0 / 10 kbps / 10 kbps / 2400 Bd 1 / 20 kbps / 20 kbps / 4800 Bd 2 / 50 kbps / 50 kbps / 9600 Bd 3 / 100 kbps / 100 kbps / 19200 Bd 4 / 125 kbps / 125 kbps / 38400 Bd 5 / 250 kbps / 250 kbps / 57600 Bd 6 / 500 kbps / 500 kbps / 115200 Bd 7 / 800 kbps / 1 Mbps / - 8 / 1 Mbps / - / - 9 / Auto / - / -
SYSTem:COMMunicate:CAN:BROadcast␣<NR1> **SYSTem:COMMunicate:CAN:BROadcast?**	Sets the CAN broadcast ID for normal CAN communication. Allowed range: **0...2047** (11 bit) or **0...536870911** (29 bit)

Command	Description
SYSTem:COMMunicate:CAN:DLC␣{AUTO | FILL} **SYSTem:COMMunicate:CAN:DLC?**	CAN data length setting for response messages from the device. **AUTO** = the number of data bytes in a CAN message from the device (response) varies according to the used command/register (default) **FILL** = the number of data bytes in a CAN message is always 8, filled with zeros
SYSTem:COMMunicate:CAN:FORMat␣{BASe | EXTen-den} **SYSTem:COMMunicate:CAN:FORMat?**	Selects the CAN address format. **BASe** = 11 Bit (CAN 2.0A) (default after device reset) **EXTended** = 29 Bit (CAN 2.0B)
SYSTem:COMMunicate:CAN:NODE␣<NR1> **SYSTem:COMMunicate:CAN:NODE?**	Sets the CAN base ID for normal CAN communication. Allowed range: **0...2047** (11 bit) or **0...536870911** (29 bit)
SYSTem:COMMunicate:CAN:READ:NODE␣<NR1> **SYSTem:COMMunicate:CAN:READ:NODE?**	Sets the CAN base ID for cyclic reading. Also see section *8.3.5* for information about cyclic reading. Allowed range: **0...2047** (11 bit) or **0...536870911** (29 bit)
SYSTem:COMMunicate:CAN:READ:ACTual␣<NR1> **SYSTem:COMMunicate:CAN:READ:ACTual?**	Defines the interval (in milliseconds) for the cyclic read of the device's actual values (U, I, P) over a CAN interface. Also see section *8.3.5*. Allowed parameter range: **0** or **20...5000** (0 = cyclic read for this object is deactivated)
SYSTem:COMMunicate:CAN:READ:ALIMits␣<NR1> **SYSTem:COMMunicate:CAN:READ:ALIMits?**	Defines the interval (in milliseconds) for the cyclic read of the device's adjustment limits for U and I (with PSB/PSBE series: current of source mode) over a CAN interface. Also see section *8.3.5*. Allowed parameter range: **0** or **20...5000** (0 = cyclic read for this object is deactivated)
SYSTem:COMMunicate:CAN:READ:BLIMits␣<NR1> **SYSTem:COMMunicate:CAN:READ:BLIMits?**	Defines the interval for the cyclic read of the device's adjustment limits for P and R (with PSB/PSBE series: power and resistance of source mode) over a CAN interface. Also see section *8.3.5*. Allowed parameter range: **0** or **20...5000** (0 = cyclic read for this object is deactivated)
SYSTem:COMMunicate:CAN:READ:CLIMits␣<NR1> **SYSTem:COMMunicate:CAN:READ:CLIMits?**	**Only with series PSB and PSBE:** Defines the interval for the cyclic read of the device's adjustment limits for I, P and R (sink mode) over a CAN interface. Also see section *8.3.5*. Allowed parameter range: **0** or **20...5000** (0 = cyclic read for this object is deactivated)
SYSTem:COMMunicate:CAN:READ:SETS␣<NR1> **SYSTem:COMMunicate:CAN:READ:SETS?**	Defines the interval for the cyclic read of the device's set values (U, I, P, R) over a CAN interface. Also see section *8.3.5*. Allowed parameter range: **0** or **20...5000** (0 = cyclic read for this object is deactivated)
SYSTem:COMMunicate:CAN:READ:BSETs␣<NR1> **SYSTem:COMMunicate:CAN:READ:BSETs?**	**Only with series PSB and PSBE:** Defines the interval for the cyclic read of the device's set values I, P, R (sink mode) over a CAN interface. Also see section *8.3.5*. Allowed parameter range: **0** or **20...5000** (0 = cyclic read for this object is deactivated)
SYSTem:COMMunicate:CAN:READ:STAT␣<NR1> **SYSTem:COMMunicate:CAN:READ:STAT?**	Defines the interval for the cyclic read of the device's status over a CAN interface. Also see section *8.3.5*. Allowed parameter range: **0** or **20...5000** (0 = cyclic read for this object is deactivated)

Command	Description
SYSTem:COMMunicate:CAN:SEND:NODE␣<NR1> **SYSTem:COMMunicate:CAN:SEND:NODE?**	Sets the CAN base ID for cyclic send. Also see section *8.3.2*. Allowed range: **0...2047** (11 bit) or **0...536870911** (29 bit)
SYSTem:COMMunicate:CAN:TERMination {ON | OFF} **SYSTem:COMMunicate:CAN:TERMination?**	Switches the integrated bus termination resistor in the CAn interface module **ON** or **OFF** (default setting)

5.4.11.2 Commands for Ethernet interface settings

The commands below are related to any Ethernet interface port, no matter if built-in or pluggable module. Some commands are only supported when an Anybus interface module is plugged.

The so-called 10000s series even support two Ethernet interfaces. The built-in Ethernet port is here considered as the secondary port, no matter of an Anybus Ethernet module is installed or not. Hence for the 10000s series it's required to switch the access to the settings of the secondary port before reading/writing parameters. See the extra command below. Overview:

	ELR 5000, EL 3000 B, PS 3000 C PS 9000, PS 9000 T, PSI 9000 T, PSI 5000, PSI 9000 DT	ELR 9000, PSI 9000, PSB 9000, PSE 9000, PSBE 9000	all 10000s series
Primary port	rigidly built-in	Anybus (optional)	Anybus (optional)
Secondary port	-	-	rigidly built-in

Command	Description
SYSTem:COMMunicate:LAN:1SPEed[?]␣{AUTO | 10HALF | 10FULL | 100HALF | 100FULL **SYSTem:COMMunicate:LAN:2SPEed[?]␣{AUTO | 10HALF | 10FULL | 100HALF | 100FULL**	Only for Anybus standard Ethernet modules and ModBus TCP modules: Sets the communication speed of the network P1 (belongs to **:1SPEED**) or (P2, belongs to **:2SPEED**), where featured: **AUTO** = Auto negotiation **10HALF** = 10MBit, half duplex **10FULL** = 10MBit, full duplex **100HALF** = 100MBit, half duplex **100FULL** = 100MBit, full duplex
SYSTem:COMMunicate:LAN:ADDRess[?]␣<SRD>	Queries or sets the IP address of the selected Ethernet interface. When setting the IP, the string has to be in the typical IP format like this: 192.168.0.2
SYSTem:COMMunicate:LAN:CONTrol[?]␣<NR1>	Queries or sets the TCP port (0...65535) of the selected Ethernet interface. Default is **5025**, used for ModBus RTU or SCPI communication. Devices supporting ModBus TCP have port 502 activated and reserved by default, so 502 is illegal to be set with this command.
SYSTem:COMMunicate:LAN:DHCP[?]␣{ON | OFF}	Activates (=ON) or deactivates (=OFF) the DHCP functionality for the selected Ethernet interface. Default is OFF, so the IP as set with :ADDR command above is used.
SYSTem:COMMunicate:LAN:DNS1[?]␣<SRD> **SYSTem:COMMunicate:LAN:DNS2[?]␣<SRD>**	Queries or sets the network address of the first (DNS1) or second (DNS2) domain name server
SYSTem:COMMunicate:LAN:DOMain[?]␣<SRD>	Queries or sets the domain name (refer to network terminology for details). This is a simple ASCII string of up to 54 characters. The domain can be used to select and access a particular device in the network without knowing the IP address.
SYSTem:COMMunicate:LAN:GATeway[?] <SRD>	Queries or sets the gateway address of the selected Ethernet interface. Format is the same as with the IP. This address is often not used and can thus be left at the default setting.

Command	Description
SYSTem:COMMunicate:LAN:HOSTname[?]␣<SRD>	Queries or set the host name (refer to network terminology for details). This is a simple ASCII string of up to 54 characters.
SYSTem:COMMunicate:LAN:KEEPalive[?]␣{ON | OFF}	Enables/disables the so-called "TCP keep-alive" for the selected Ethernet interface. Also see *„3.7. Connection timeout“.* Default setting: OFF
SYSTem:COMMunicate:LAN:MAC?	Queries the MAC of the selected Ethernet interface, when physically present.
SYSTem:COMMunicate:LAN:SMASk[?]␣<SRD>	Queries or sets the subnet mask of the selected Ethernet interface. Format is the same as with the IP.
SYSTem:COMMunicate:LAN:TIMeout[?]␣<NR1>	Defines a socket connection timeout for the selected Ethernet interface in seconds. Also see *„3.7. Connection timeout“.* Setting this to 0 disables the timeout. Adjustment range: **0** or **5**...**65535**. Default setting: **5**

The 10000s series require to select between the primary Ethernet port (in the slot, Anybus module) and the secondary Ethernet port (built-in RJ45) before accessing Ethernet related settings via SCPI commands. After powering the device, the primary interface is selected by default, no matter if a module is plugged or not.

Command	Description
SYSTem:COMMunicate:LAN:INDex␣{1 | 2} **SYSTem:COMMunicate:LAN:INDex?**	Temporary switch between the secondary interface (=**2**) and the primary interface (=**1**, default after power-up).

5.4.12 Commands for remote control of the function generator

ELR9	ELR5	PS9	PSI9	PSI5	PSE	DT	PST	PSIT	EL3	PSB	PSBE	PS3	PS2	PS1	PSI1	PSB1	PSBE1	ELR1
✓	–	–	✓	–	–	✓	–	✓	–	✓	–	–	–	–	✓	✓	–	✓

Sequence data or table data, which you can write via SCPI commands, isn't stored in the device.

The function generator (short: FG) is a complex part of the whole control options of the device. It can be remotely configured and controlled by a set of SCPI commands. When operating the function manager on the control panel of the device, it requires a certain procedure of setup before getting to the actual starting point. The single commands can not enforce that procedure, so it's up to the user to use them in the correct sequence. What to do:

1) Select the type of generator

You need to configure the function generator at least once after the device has been powered. The first step is to select the type of function generator, causing further steps to depend on your selection. There are two types available: **XY** and **arbitrary**.

The **XY** function generator is only a memory for a table with 4096 values which represent 0-125% of the rated voltage or current of the device, while the arbitrary generator is used for other functions like sine wave, square wave etc. Bidirectional devices, like those from PSB series, feature two tables, one for source mode (generator mode: **IUPS**) and one for sink mode (generator mode: **IUEL**). The mode **IU** combines both of these modes into one, so that a PSB device can switch between the two quadrants while having different tables loaded for **IUEL** and **IUPS**. Sink mode generally only works if the voltage on the DC input is higher than the voltage set value.

The **arbitrary** generator is used to generated standard waves like sine, rectangle, triangle etc.

2) Configure the function generator (part 1)

As a second step, when using the arbitrary generator, it requires to first select to which DC input/output value the function is assigned, voltage (U) or current (I). After that you define the range of sequence points to run. This doesn't happen automatically when filling a certain number of sequence points with data.

In case the XY generator is used, the second step would be to select what sort of XY curve it shall run. Depending on that selection, values written to the table memory will be interpreted and checked for plausibility accordingly.

3) Configure the function generator (part 2)

The last step is to fill the function generator with data. With the arbitrary generator this is done by setting up X out of 99 possible sequence points. The number of effective points to run is variable, but at least 1.

The XY generator is filled with 1-4096 values per table.

XY data and sequence data, once completely loaded, require to be submitted by a dedicated command which requires to wait some time before proceeding. We recommend to wait at least 2 seconds after submitting the data and before the next command.

4) Use the function generator

After step 3, the function generator is completely configured and can be started.

Switching to a different function generator mode requires to first leave function generator mode by sending [SOURce:]FUNCtion:GENerator:SELect␣NONE. Only after that the device will allow to select a different mode. Previously loaded table or sequence point data will be erased when leaving function generator mode.

5.4.12.1 Generator type support

Not all series which feature a function generator, not to be confused with the "sequence generator" of ELR 5000 series or the "ramp generator" of the 3000s series, have the same set of functions available. This is an overview which series support what functionality:

	ELR9	PSI9	DT	PSIT	PSB	PSI1	PSB1	ELR1
Arbitrary generator	✓	✓	✓	✓	✓	✓	✓	✓
XY generator	✓	✓	–	–	✓	✓	✓	✓

5.4.12.2 XY generator: Mode selection and setup (9000 series only, except PSB 9000)

This section is only for older 9000 series devices with one XY table. The first step is always to activate the XY function generator and select the mode at the same time:

Command	Description
[SOURce:]FUNCtion:GENerator:SELect␣{UI | IU | PV | NONE} **[SOURce:]FUNCtion:GENerator:SELect?**	Selects the run mode of XY function generator: **UI** = **UI** curve, also used and **FC** function **IU** = **IU** curve **PV** = Simple **PV** curve (also see *5.4.12.8*) For the **extended EN 50530 PV** function and its special commands refer to section *5.4.17*. **NONE** = Exit function generator, also used before switching to another FG mode

After the mode has been selected, table data can be loaded. Refer to section *5.4.12.* and also to the operating manual of your device for further details about the XY function generator and how it works.

Command	Description
[SOURce:]FUNCtion:GENerator:XY:LEVel␣<NR1>	**1.** Selects a table entry (range: 0...4095) for writing or returns the currently selected entry number.
[SOURce:]FUNCtion:GENerator:XY:DATa␣<NR2> **[SOURce:]FUNCtion:GENerator:XY:DATa?**	**2.** Writes a value to the previously with **:LEVel** selected table entry or queries the value.
[SOURce:]FUNCtion:GENerator:XY:SUBMit	**3.** Submits the loaded data to the function generator. After submitting the data the function can be started

5.4.12.3 XY generator: Mode selection and set up (10000 series and PSB 9000 series)

The **XY** generator configuration of a PSB series device is more complicated than with other series, because due to the nature of a bidirectional device with its sink and source modes, it has two data tables. **Table 1 is assigned to source mode, table 2 to sink mode.** Depending on the selected mode, either one or the other or both tables are used, which also requires to distinguish the commands to use. Mode comparison and overview:

XY mode	Description	PSB mode	Uses table	Supported by non-PSB	Remarks
IU	IU curve	Source or sink	1 and 2	no	Active quadrant can be switched by varying the voltage set value
IUEL	IU curve for sink mode	Sink	2	ELR	ELRs naturally run in sink mode
IUPS	IU curve for source mode	Source	1	PSI	PSIs naturally run in source mode
PV	Simple PV, same as PVA	Source	1	PSI, PSB	
PVA	PV curve A	Source	1	PSI	Curve A is the default curve which is also used by both, the simple and extended PV functions. Curve B can be used alternatively.
PVB	PV curve B	Source	2	PSI	
FC	FC curve	Source	1	PSI	FC curves are actually UI curves which are loaded for the IU mode, so the table data either has to be transposed before or is directly calculated as current values by the FC formula.

Command	Description
[SOURce:]FUNCtion:GENerator:SELect␣{FC | IUPS | IUEL | UI | PV | PVA | PVB | NONE} **[SOURce:]FUNCtion:GENerator:SELect?**	Selects the run mode of XY function generator mode according to the table above. For the **extended EN 50530 PV** curve commands refer to section *5.4.17*. **NONE** = Exit function generator, also used before switching to another FG mode

All 10000 series support to switch between all 6 modes of the XY generator, no matter if ELR, PSI or PSB. The modes not supported by the particular device type would simply not work when configured and run.

After the mode has been selected, table data can be loaded. Refer to section *5.4.12.* and also to the operating manual of your device for further details about the XY function generator and how it works. According to the distinction of modes as shown above, the table assignment leads to the use of table assigned commands for the 1st and 2nd table:

Commands for XY table 1	Description
[SOURce:]FUNCtion:GENerator:XY:LEVel␣<NR1>	**1.** Selects a table entry (range: 0...4095) for writing or returns the currently selected entry number.
[SOURce:]FUNCtion:GENerator:XY:DATa␣<NRf> **[SOURce:]FUNCtion:GENerator:XY:DATa?**	**2.** Writes a value to the previously with **:LEVel** selected table entry or returns the value.
[SOURce:]FUNCtion:GENerator:XY:SUBMit␣FIRSt	**3.** Submits the data which has been written so far for the 1st table. After submitting the data the function can be started

Commands for XY table 2	Description
[SOURce:]FUNCtion:GENerator:XY:SECond:LEVel␣<NR1> **[SOURce:]FUNCtion:GENerator:XY:SECond:LEVel?**	**1.** Selects a table entry (range: 0...4095) for writing or returns the currently selected entry number.
[SOURce:]FUNCtion:GENerator:XY:SECond:DATa␣<NR2> **[SOURce:]FUNCtion:GENerator:XY:SECond:DATa?**	**2.** Writes a value to the previously with **:LEVel** selected table entry or returns the value.
[SOURce:]FUNCtion:GENerator:XY:SUBMit␣SECond	**3.** Submits the data which has been written so far for the 2nd table. After submitting the data the function can be started

5.4.12.4 Arbitrary generator: Mode selection and configuration

Command	Description
[SOURce:]FUNCtion:GENerator:SELect␣{VOLTage | CURRent | NONE} **[SOURce:]FUNCtion:GENerator:SELect?**	Select the type of function generator: **VOLTage** = Arbitrary generator for U **CURRent** = Arbitrary generator for I **NONE** = Exit function generator
[SOURce:]FUNCtion:GENerator:WAVe:STARt␣<NR1> **[SOURce:]FUNCtion:GENerator:WAVe:STARt?**	Defines the start sequence point (range: 1...99) or queries the last setting. If only one sequence point is used, then it must be **:END** = **:STARt**.
[SOURce:]FUNCtion:GENerator:WAVe:END␣<NR1> **[SOURce:]FUNCtion:GENerator:WAVe:END?**	Defines the end sequence point (range: 1...99) or queries the last setting.
[SOURce:]FUNCtion:GENerator:WAVe:NUMBer␣<NR1> **[SOURce:]FUNCtion:GENerator:WAVe:NUMBer?**	Defines, how often the sequence block from **:STARt** to **:END** is cycled through or queries the last setting. Range: **0** (infinite cycles) or **1**...**999**

5.4.12.5 Arbitrary generator: Load sequence point data

Sequence point data should only be sent to the device after it was switched to function generator mode, which also sets the assignment of the arbitrary generator to U or I.

A function can consist of 1 to 99 sequence points, so one sequence point is either a complete function or just a part of it. When started, the function generator will execute the sequence points from start sequence point to end sequence point, as defined by the user. With every point being variable, the resulting function can be quite complex. The sequence point data is loaded into the device with three commands and in a specific order like this:

Command	Description
[SOURce:]FUNCtion:GENerator:WAVe:LEVel␣<NR1> **[SOURce:]FUNCtion:GENerator:WAVe:LEVel?**	**1.** Selects a sequence point (range: 1...99) to write or queries the currently selected sequence point number

Command	Description
[SOURce:]FUNCtion:GENerator:WAVe:INDex␣<NR1> **[SOURce:]FUNCtion:GENerator:WAVe:INDex?**	**2.** For the selected sequence point, a set of parameters can be configured. This command selects the parameter between 0 and 7 with **INDex**. The next command (**:DATa)** is then used to write a specific value. The indexes are explained below. This can also be used to query the value of the currently selected index.
[SOURce:]FUNCtion:GENerator:WAVe:DATa␣<NR2> **[SOURce:]FUNCtion:GENerator:WAVe:DATa?**	**3.** This will write a value, for example a frequency, to the previously selected parameter, as part of the sequence point setup. This can also be used to query the last value.
[SOURce:]FUNCtion:GENerator:WAVe:SUBMit	**4**. Submits all data. Without sending this command, the FG wouldn't used the programmed data, but any previous data in the internal memory.

When manually adjusting parameters for the arbitrary function generator on the device's control panel (HMI), they are limiting each other so the resulting signal will work as expected. In remote control, the plausibility of values is also checked, but this is only done after the data has been submitted. The check result may lead to an error which should be queried from the device in order to proceed the next step.

For example, index 0 is connected to index 5, as the DC value is the base line of the AC amplitude. It means, if you, for instance, want to achieve a sine wave with 5 A amplitude on the DC input current of an electronic load, the base line of the resulting sine wave has to be at minimum 5 A, else the negative wave will be clipped at 0. Indexes 5 and 6 are adjustable DC offsets which move the AC wave's base line on the Y axis. So the values in indexes 5 and 6 should at least be as high as index 0 or 1 (whichever is bigger), but they can also be higher. See figures below.

In relation to the adjustments for a function as they can be done on the device's front panel, following indexes are selectable with **:INDex** and readable/writable with **:DATa**:

Index	Parameter	Data type	Unit	Value range	Note
0	Start value (amplitude)	Float	A, V	0...Nominal value (U or I)	For AC part only
1	End value (amplitude)	Float	A, V	0...Nominal value (U or I)	For AC part only
2	Start frequency in Hz	Integer	Hz	0...10000	For AC part only
3	End frequency in Hz	Integer	Hz	0...10000	For AC part only
4	Start angle in °	Integer	-	0...359	For AC part only
5	Start level (offset)	Float	A, V	0...Nominal value (U or I) PSB series only: -Nom. value of I...+ Nom. value of I	For AC and DC part
6	End level (offset)	Float	A, V	0...Nominal value (U or I) PSB series only: -Nom. value of I...+ Nom. value of I	For AC and DC part
7	Sequence time	Float	s	0.0001...36000	

In case start and end value (indexes 0+1 and indexes 5+6) are not equal, the device expects a certain minimum change of ±0.058%/s or a frequency change of ±9.3 Hz/s (indexes 2+3) over the sequence point time. For example, it's thus not possible to increase the input current by 1 A over 1 h (ramp). Another example: with the sequence time being set to 2 s, a start frequency of 1 Hz and end frequency of 10 Hz wouldn't be accepted, because difference only 9 Hz/s, but start frequency of 30 Hz and end frequency of 5 Hz would.

Parameter assignment illustrated by an example curve:

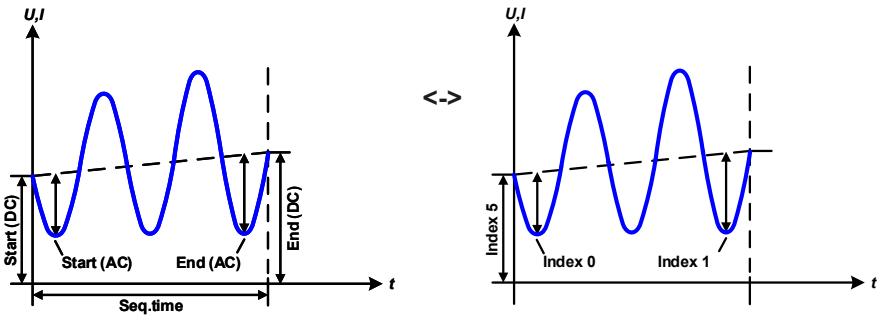

5.4.12.6 XY generator: Control

After the configuration of the XY generator and after all necessary table data has been loaded it can be started by simply switching the DC output/input of the device on. This is the actual function run and is only stops due to a device alarm or abortion by the user.

5.4.12.7 Arbitrary generator: Control

Contrary to the XY generator where the curve is immediately active when switching on the DC output/input, the arbitrary generator requires run control by command. The run can't be paused. It means, once the function is stopped, no matter by what reason, the next start will run from the beginning, the first sequence in use.

Command	Description
[SOURce:]FUNCtion:GENerator:WAVe:STATe␣{RUN | STOP} **[SOURce:]FUNCtion:GENerator:WAVe:STATe?**	Starts/stops the arbitrary function generator or queries the state

5.4.12.8 Special function "Simple PV" (photovoltaics)

ELR9	PSI9	DT	PST	PSIT	PSB	PSBE	PSI1	PSB1	PSBE1	ELR1
–	✓	–	–	–	✓	–	✓	✓	–	–

For the extended PV function EN 50530 refer to section „5.4.17. Commands for the extended PV simulation“.

The photovoltaics function (PV), as available in certain power supply series, is based on the XY function generator. In remote control it's required to load a complete, precalculated value table into the device, contrary to the more comfortable way on the HMI where you set up 4 simulation related parameters by entering values and the device would then calculate and load the table. In order to get the table data calculated for loading it via interface you have two options:

1. Use external tools and save as CSV file which also allows for loading it later from USB stick or let it be calculated in a custom software and directly transfer it to the device.

2. Use the HMI, enter four PV simulation related parameters, let the device calculate and load the table, then go back in the menu to find an option to save the table data to USB stick.

During function run the irradiation value, which simulates different light situations, can be adjusted. The irradiation impacts the current in the maximum power point as a factor.

Command	Description
[SOURce:]IRRadiation␣<NR1> **[SOURce:]IRRadiation?**	Adjusts or queries the irradiation value during the solar panel simulation in a range of 0...100 per cent, which affects the DC current and shifts the MPP in X direction

Given that the device is already in remote control and the XY table for the PV function is already calculated and ready to be loaded, following procedure is defined:

► How to setup the device for the simple PV function

No.	Command	Description
1	**FUNC:GEN:SEL␣PV**	Selects the PV function for the XY generator. By sending this command the device will switch to function generator mode. A PSB device will redirect itself to mode PVA. See section *5.5.3*.
2	**FUNC:GEN:XY:LEV␣0**	Subsequently write all XY table values for the PV curve into the device
3	**FUNC:GEN:XY:DAT␣<NR2>**	
...		
8193	**FUNC:GEN:XY:LEV␣4095**	
8194	**FUNC:GEN:XY:DAT␣<NR2>**	
8195	**FUNC:GEN:XY:SUBM**	Submit the written data

After submitting all data, it's necessary to wait some time (≈1 s) before starting the simulation. Optionally and if not already done, set additional global limits like voltage and power, either to maximum or any other value that doesn't interfere the simulation. The voltage here should be set to the open circuit voltage (Uoc), alternatively to maximum:

No.	Command	Description
8196	**VOLT␣MAX**	Set voltage to max, so it's independent from the model. Alternatively, the voltage could also be set to at least Uoc for unloaded situations
8197	**POW␣MAX**	Set power to max, independent from the model

After all is set, you can run the function and control the simulation and irradiation. The irradiation then acts as a factor that is multiplied to the current value that is read from the table, so changing this value moves the power point vertically on the Y axis. For an illustration of the PV curve, refer to your device's user manual.

► How to control the device during the PV function run

No.	Command	Description
8198	**OUTP␣ON**	Switch the DC output of your device on to start the function
8199	**IRR␣85**	Set irradiation to 85%, for example
8200	**OUTP␣OFF**	Switch the DC output of your device off to make the function stop
8201	**FUNC:GEN:SEL␣NONE**	Parameter **NONE** selects no function generator type and leaves the function generator mode

5.4.12.9 Special function: FC (fuel cell)

ELR9	PSI9	DT	PST	PSIT	PSB	PSBE	PSI1	PSB1	PSBE1	ELR1
–	✓	–	–	–	✓	–	✓	✓	–	–

The fuel cell function (FC) is based on the XY function generator, as available in certain power supply series. In remote control it's only possible to load a complete, precalculated table with 4096 values into the device. Basically, an FC curve is an UI curve, so with a PSI 9000 device you would select mode "UI" for the XY generator. For a PSB 9000 or all 10000 series devices, which don't support UI curves, it requires different settings and data. Overview:

	PSI 9000	PSB 9000 / PSB 10000 / PSI 10000
XY generator mode	**UI**	**FC**
Loaded curve data must contain	Voltage values	Current values

Loading table is in the contrary to the more comfortable way on the HMI where you define 4 points on the curve by entering values and the device would then calculate and load the table. But the HMI method can be used to save the calculated table data for use in remote control.

In order to the table data calculated you have two options:

1. You do it with external tools, such as MS Excel, and then load all data into the device.

2. You use the HMI, enter the four points, let the device calculate and load the table, then leave FG mode and back in the menu there is an option to save the table data to USB stick.

The 2nd method is recommend for use with devices where it requires transposition, as there is no official formula available to translate an FC-UI table into current values (IU table).

5.4.13 Commands for remote control of the sequence generator (ELR 5000 only)

Sequence data written with SCPI commands is permanently stored inside the device and is also connected to the sequence data which you can edit on the front panel (HMI).

The sequence generator of the ELR/ELM 5000 series is a simplified version of the arbitrary function generator of other series, but the handling is almost identical.

When operating the sequence generator on the control panel of the device, it enforces a certain procedure of setup before getting to the actual starting point. The single commands can not enforce that procedure, so it's up to the user to use them in the correct sequence. What to do:

1) Configure the sequence generator. There are two items. One is to load the data for the sequence points, at least if different settings than stored are going to be used. The other settings, like start sequence point etc., are recommended to always be configured.

2) Run and control the sequence generator.

5.4.13.1 Configuration of the sequence generator

Command	Description
[SOURce:]FUNCtion:GENerator:WAVE:STARt␣<NR1> **[SOURce:]FUNCtion:GENerator:WAVE:STARt?**	Defines the sequence point (1...100) to start from or queries the last setting. If only one sequence point is used, then it must be **:END** = **:STARt**.
[SOURce:]FUNCtion:GENerator:WAVE:END␣<NR1> **[SOURce:]FUNCtion:GENerator:WAVE:END?**	Defines the sequence point (1...100) to stop at or queries the last setting.
[SOURce:]FUNCtion:GENerator:WAVE:NUMBer␣<NR1> **[SOURce:]FUNCtion:GENerator:WAVE:NUMBer?**	Defines, how often the sequence block from **:STARt** to **:END** is cycled through or queries the last setting. Range: **0** (infinite cycles) or **1**...**999**

5.4.13.2 Control the arbitrary function generator

Command	Description
[SOURce:]FUNCtion:GENerator:WAVE:STATe␣{RUN | STOP} **[SOURce:]FUNCtion:GENerator:WAVE:STATe?**	Starts/stops the sequence generator or queries the state. With the start of the generator in remote control, the display of the device will automatically switch to sequence generator mode.

5.4.13.3 Load sequence point data

Sequence data should can always be sent to the device while the DC input is switched off. There is no special mode to activate before.

Which ones of the 100 sequence points are going to be filled with data is determined by the user, as well as the points to start from and to stop at and the number of cycles of the entire sequence. The block of sequence points can be of arbitrary size. When processing a sequence point during the sequence run which has not been filled with data, it would result in an interrupt of the minimum sequence point time of 300 ms, along with values U and I being zero for that moment. Commands to load sequence point data:

Command	Description
[SOURce:]FUNCtion:GENerator:WAVE:LEVel␣<NR1> **[SOURce:]FUNCtion:GENerator:WAVE:LEVel?**	Selects a sequence point (1...100) for write actions or queries the number of the currently selected sequence point
[SOURce:]FUNCtion:GENerator:WAVE:INDex␣<NR1> **[SOURce:]FUNCtion:GENerator:WAVE:INDex?**	For the selected sequence point, a set of 4 parameters has to be configured. This command selects the parameter between 0 and 3 with **:INDex**. The next command (**:DATa)** is then used to write a value. The indexes are explained below. Can also be used to query the current index.
[SOURce:]FUNCtion:GENerator:WAVE:DATa␣<NR2> **[SOURce:]FUNCtion:GENerator:WAVE:DATa?**	This will write a value to the previously selected parameter, as part of the sequence point definition. Can also be used to query the last value.
[SOURce:]FUNCtion:GENerator:WAVE:SUBMit	Submits all data. Without sending this command, the sequence generator would use formerly stored data.

These commands would be repeated for every sequence point to load. When using the full set of 100 sequence points it would require to send 901 commands, see steps 1-10 in the example below.

In relation to the adjustments for a function as they can be done on the device's front panel, following parameters are selectable with **:INDex** and readable/writable with **:DATa**.

Index	Parameter	Value range
0	Sequence point voltage set value in Volt	0...Nominal value of U
1	Sequence point current set value in Ampere	0...Nominal value of I
2	Sequence point power set value in Watt	0...Nominal value of P
3	Sequence point time in milliseconds	1...36,000,000, step width 1 ms

In case any of the three set values isn't written, it keeps the last stored value. It's recommended to always set all three value to ensure the result of the sequence is as expected.

The adjustment limits on the HMI ("Limits") don't apply here.

5.4.13.4 Example command sequence

Assumption: the source shall be loaded with 20 A for 60 seconds. Because the ELM 5000 load module can only take up to 320 W of power, the input voltage must not be higher 16 V for this run, else the power would be limited by decreasing the input current below the programmed value. The power limit should be maximum for this example.

No.	Command	Description
1	**FUNC:GEN:WAVE:LEV␣12**	Selects the 12th sequence point for writing values, for this example only this particular point is going to be written and used for the sequence run
2	**FUNC:GEN:WAVE:IND␣0**	Select index 0: Voltage set value.
3	**FUNC:GEN:WAVE:DAT␣0**	Set voltage for sequence point 12 to 0 V. Could be 0...80 for an 80 V model. With an electronic load, the voltage is secondary and when running it in CC mode is intended, the voltage would usually be set to 0
4	**FUNC:GEN:WAVE:IND␣1**	Select index 1: Current set value
5	**FUNC:GEN:WAVE:DAT␣20**	Set current for the sequence point 12 to 20 A. Could be 0...25 for an 80 V model.
6	**FUNC:GEN:WAVE:IND␣2**	Select index 2: Power set value
7	**FUNC:GEN:WAVE:DAT␣320**	Set power of sequence point 12 to 320 W. If the total power shall not be limited to less than nominal for the entire sequence, it's required to set every sequence point's power to maximum, because there is no global power value for the sequence.
8	**FUNC:GEN:WAVE:IND␣3**	Select index 3: Time
9	**FUNC:GEN:WAVE:DAT␣60000**	Sets the time to elapse while the set values of sequence point 12 are effective to 60 s.
10	**FUNC:GEN:WAVE:SUBM**	Submit all sequence data
11	**FUNC:GEN:WAVE:STAR␣12**	Sets the first sequence point of the sequence to 12
12	**FUNC:GEN:WAVE:END␣12**	Sets the last sequence point of the sequence also to 12
13	**FUNC:GEN:WAVE:NUMB␣1**	Sets 1 cycle, i. e. no repetition

Result of this setup: when running the sequence generator, the electronic load will set the values of sequence point 12 (0 V, 20 A, 320 W) and switch the DC input on. It would then draw 20 A for a period of 60 seconds. After that, the sequence generator would automatically stop after 1 cycle. With the DC input remaining on after the stop, the load would continue to draw 20 A.

In case it's wanted to have zero current after the end of the sequence run, the next sequence point would be used. The chain of commands, as shown above, would change after step 9 to this:

No.	Command	Description
10	**FUNC:GEN:WAVE:LEV␣13**	Selects the 13th sequence point for writing values
11	**FUNC:GEN:WAVE:IND␣1**	Select index 1: Current set value
12	**FUNC:GEN:WAVE:DAT␣0**	Set current for the sequence point 13 to 0 A.
13	**FUNC:GEN:WAVE:SUBM**	Submit all sequence data
14	**FUNC:GEN:WAVE:STAR␣12**	Sets the first sequence point of the sequence to 12
15	**FUNC:GEN:WAVE:END␣13**	Sets the last sequence point of the sequence to now 13
16	**FUNC:GEN:WAVE:NUMB␣1**	Sets 1 cycle, i. e. no repetition

The voltage value and time of sequence point 13 don't matter. The sequence generator would stop after point 13 with 0 A and DC input switched on. Since no current is flowing, it could be considered as "input off".

5.4.14 Commands for remote control of the MPP tracking feature

ELR9	ELR5	PS9	PSI9	PSI5	PSE	DT	PST	PSIT	EL3	PSB	PSBE	PS3	PS2	PS1	PSI1	PSB1	PSBE1	ELR1
✓	✓	–	–	–	–	– (1	–	–	–	✓	–	–	–	–	✓	✓	–	✓

(1 Not with PSI 9000 DT

Maximum Power Point (MPP) tracking is something inverters for solar panels use. The MPP tracking emulates the tracking behaviour of such inverters. The feature itself and its modes and settings are described in the device manual. Here only the corresponding commands for remote setup and control are explained.

5.4.14.1 Configuration of the MPP tracking

The configuration is done with 14 indexes and specific :**DATa** commands:

Command	Description
[SOURce:]FUNCtion:GENerator:MPP:INDex␣0 **[SOURce:]FUNCtion:GENerator:MPP:DATa[?]␣{NONE | MPP1 | MPP2 | MPP3 | MPP4}**	Index 0: MPP tracking mode selection **MPP1**: MPP tracking mode 1 (Find MPP) **MPP2**: MPP tracking mode 2 (Track) **MPP3**: MPP tracking mode 3 (Fast track) **MPP4**: MPP tracking mode 4 (User curve) **NONE**: Deactivate MPPT
[SOURce:]FUNCtion:GENerator:MPP:INDex␣1 **[SOURce:]FUNCtion:GENerator:MPP:DATa[?]␣<NR2>**	Index 1: Set the open circuit voltage Uoc (0-Unom)
[SOURce:]FUNCtion:GENerator:MPP:INDex␣2 **[SOURce:]FUNCtion:GENerator:MPP:DATa[?]␣<NR2>**	Index 2: Set the short-circuit current Isc (0-Inom)
[SOURce:]FUNCtion:GENerator:MPP:INDex␣3 **[SOURce:]FUNCtion:GENerator:MPP:DATa[?]␣<NR2>**	Index 3: Set the voltage limit for fast track mode 3 Umpp (0-Unom)
[SOURce:]FUNCtion:GENerator:MPP:INDex␣5 **[SOURce:]FUNCtion:GENerator:MPP:DATa[?]␣<NR2>**	Index 5: Set the MPP for fast track mode 3 Pmpp (0-Pnom)
[SOURce:]FUNCtion:GENerator:MPP:INDex␣6 **[SOURce:]FUNCtion:GENerator:MPP:DATa[?]␣<NR2>**	Index 6: Set ΔP (in Watts), a difference to the MPP above which the tracker starts to find the MPP again (only used with mode 2 and mode 3) The allowed range is defined as 0-50W for some series, for others it's 0-Pnom.
[SOURce:]FUNCtion:GENerator:MPP:INDex␣7 **[SOURce:]FUNCtion:GENerator:MPP:DATa?**	Index 7: resulting MPP Reads three values (Uact, Iact, Pact) which define the MPP (modes 1, 2 and 4)
[SOURce:]FUNCtion:GENerator:MPP:INDex␣8 **[SOURce:]FUNCtion:GENerator:MPP:LEVel[?]␣<NR1>** **[SOURce:]FUNCtion:GENerator:MPP:DATa[?]␣<NR2>**	Index 8: Set voltage values for mode 4 Select the value to set (1...100) Set the value (0-Unom)

Command	Description
[SOURce:]FUNCtion:GENerator:MPP:INDex␣9 **[SOURce:]FUNCtion:GENerator:MPP:LEVel[?]␣<NR1>** **[SOURce:]FUNCtion:GENerator:MPP:DATa?**	Index 9: Measured results of mode 4 Select measured data to read (1...100) Read data (three values: Uact, Iact, Pact)
[SOURce:]FUNCtion:GENerator:MPP:INDex␣10 **[SOURce:]FUNCtion:GENerator:MPP:DATa[?]␣<NR1>**	Index 10: Regulation interval for mode 4 stepping or for next tracking action in the other mode (this parameter is only available in remote control; for manual control it's set to minimum) Interval in milliseconds (5...60000)
[SOURce:]FUNCtion:GENerator:MPP:INDex␣12 **[SOURce:]FUNCtion:GENerator:MPP:DATa[?]␣<NR1>**	Index 12: End number for mode 4 of the voltage values set with index 8 Set end number (1...100)
[SOURce:]FUNCtion:GENerator:MPP:INDex␣11 **[SOURce:]FUNCtion:GENerator:MPP:DATa[?]␣<NR1>**	Index 11: Start number for mode 4 of the voltage values set with index 8 Set start number (1...100)
[SOURce:]FUNCtion:GENerator:MPP:INDex␣13 **[SOURce:]FUNCtion:GENerator:MPP:DATa[?]␣<NR1>**	Index 13: Number of repetitions for mode 4 Repetitions of the scan (0...65535)

5.4.14.2 Control of the MPP tracking

The MPP tracking is started or stopped with a separate command. Independent from the DC input condition of the device it would automatically switch the DC input on when sending RUN.

Command	Description
[SOURce:]FUNCtion:GENerator:MPP:STATe[?]␣{RUN | STOP}	**RUN** = Runs the MPP tracking in the configured mode **STOP** = Stops MPP tracking anytime, no matter if there is a positive result or not **?** = Read the tracking status

The tracking status, as it can be read with command **FUNC:GEN:MPP:STAT?**, returns the current status as **RUN** (running) or **STOP** (stopped). The meaning of **STOP** slightly differs, depending on the chosen mode:

Mode 1: **STOP** means, the MPP has been found (positive result) and the tracking has been finished

Modes 2 and 3: These modes don't stop automatically, so **STOP** only returns the status as set by **:STAT** command

Mode 4: **STOP** means, the user curve has been processed the defined number of cycles

5.4.15 Commands for alarm management

ELR9	ELR5	PS9	PSI9	PSI5	PSE	DT	PST	PSIT	EL3	PSB	PSBE	PS3	PS2	PS1	PSI1	PSB1	PSBE1	ELR1
✓	✓	✓	✓	✓	✓	✓	✓	✓	✓	✓	✓	✓	–	✓	✓	✓	✓	✓

In remote control operation it's also important to manage alarms correctly. This can be done the same way as in manual control. When using SCPI command language, device alarms are indicated via status register which can be polled.

5.4.15.1 Reading device alarms

Reading device alarms should happen in certain intervals, by querying the Questionable status register by either the sub register **:CONDITION** or **:EVENT**. The command **STAT:QUES:COND?** or **STAT:QUES?** or **STAT:QUES:EVEN?** return a value that represents certain bits (see *„5.4.2. Status registers“*), indicating various statuses. When a bit is set, it means a certain alarm is present. Refer to the device's operating manual for details about device alarms.

5.4.15.2 Acknowledging device alarms

In order to make the user take notice of device alarms, they require to be acknowledged after the cause has been removed. Acknowledgment will delete alarms from the status register and should only be done after they have been recorded. To delete/acknowledge an alarm, the command **SYST:ERR?** or **SYST:ERR:ALL?** is used, which also serves to query communication errors. In case one or multiple alarms are still present, they won't be cleared from the register.

5.4.15.3 Alarm counters

These counters count alarm occurrences since the last time the device was powered. They can be read by command anytime, are not stored when the device is switched off and are purged by reading.

For power supplies in source operation, as well as electronic loads in sink operation:

Command	Description
SYSTem:ALARm:COUNt:OVOLtage?	Counts overvoltage alarms (OVP, adjustable threshold)
SYSTem:ALARm:COUNt:OTEMperature?	Counts overtemperature alarms (OT, not adjustable)
SYSTem:ALARm:COUNt:OPOWer?	Counts overpower alarms (OPP, adjustable threshold)
SYSTem:ALARm:COUNt:OCURrent?	Counts overcurrent alarms (OCP, adjustable threshold)
SYSTem:ALARm:COUNt:PFAil?	Counts power fail alarms (PF, not adjustable)

For bidirection power supplies in sink operation additionally supported:

Command	Description
SYSTem:SINK:ALARm:COUNt:OPOWer?	Counts overpower alarms (OPP, adjustable threshold), if they occur during sink operation, for distinction from source operation
SYSTem:SINK:ALARm:COUNt:OCURrent?	Counts overcurrent alarms (OCP, adjustable threshold), if they occur during sink operation, for distinction from source operation

Additionally and only available with 10000s series:

Command	Description
SYSTem:ALARm:COUNt:SHARebusfail?	Count Share bus fail alarms (SF, not adjustable)

5.4.15.4 Example

You are running the device in remote control and poll the alarm status with **STAT:QUES:COND?** command in a certain interval and you always receive value 3072. This is the sum of the bit values of bits 10 (remote) and 11 (output/input on). It tells you that remote control is active and the DC output/input is switched on. Then a device alarm occurs caused by the unit overheating. When reading the questionable register the next time, bit 3 should indicate the OT alarm for you to take notice. Additionally, the DC output/input might be indicated as switched off, besides the shut down power stages, which doesn't happen with every device series. Thus the returned value could be 1032 or 3080. Both contain bit's 3 value of 8.

5.4.16 Commands for presets (Recall, only PSI 5000)

The Recall feature, as integrated with power supply series PSI 5000 A, can also be configured and used remotely. Here, standard SCPI commands are used and thus it's a little different compared to ModBus. Overview of commands used only for access to the presets:

Command	Description
***RCL␣{1...9}**	Recalls, i.e. loads one out of nine presets from the internal storage. The preset consists of four values (voltage, current, OVP, OCP) and overwrites the currently active values on the DC output. The command can only be executed while the DC output is switched off.
***SAV␣{1...9}**	Save the four currently active values (set value of voltage, set value of current, values of OVP and OCP) on the DC output to the selected preset for future use, when they are recalled using the ***RCL {1...9}**. The command can only be executed while the DC output is switched off.
MEMory:STATe:DELete␣{1...9}	Deletes the selected preset by writing zero to all values. The preset can later be written with custom values anytime.

Similar to manually operating the recall feature on the control panel of the device, these commands are only accepted while the DC output is switched off.

In order to set the four values that can be stored as a preset, common commands like **[SOURce:]VOLTage** are used. Also see examples below.

5.4.16.1 Example sequence for setting up and saving a preset

For example, you have a power supply PSI 5040-20 A with 40 V nominal voltage and 20 A nominal current. Now you want to set up and save preset number 5 for recall. Let's say the values to set up are U = 10 V, I = 5 A, OVP = 12 V and OCP = 22 A. The protections are used to prevent the load from high voltage overshootings which can result from typical regulation characteristics when setting the current to zero while the and then releasing the current again, so the voltage "jumps".

The overcurrent protection is of now priority for you, but it's recommended to set it as well, so it won't interfere. There is always a setting which you might not know, so let's set it to maximum (here: 22 A). With all being prepared, following sequence of commands would have to be sent to the device:

Nr.	Command	Description
1	**OUTP␣OFF**	Switch the DC output off first (no matter if already off), because saving the preset requires the output to be off and changing the output values with the output being on and with load attached could result in unwanted behavior.
2	**VOLT␣10**	Set 10 V output voltage (normal set value)
3	**CURR␣5**	Set 5 A output current (normal set value)
4	**VOLT:PROT␣12**	Set OVP threshold to 12 V
5	**CURR:PROT␣22**	Set OCP threshold to 22 A
6	***SAV␣5**	Store preset 5

5.4.16.2 Example sequence for recalling a preset

During remote control, the four values that are stored in a preset could also be set with four small commands, so that recalling a preset in remote control is something that will be used quite rarely. The big advantage of setting the values directly is that it doesn't matter whether the DC output is switched on or off, they can be sent anytime.

In case you still want to recall a preset, for example number 3, make following steps:

Nr.	Command	Description
1	**OUTP␣OFF**	Switch the DC output off first (optional, if already off), so the preset can be recalled
2	***RCL 3**	This will recall preset 3 and overwrite the former output values U, I, OVP and OCP with the ones stored in the preset
3	**OUTP␣ON**	(optional) Switch DC output on again

In order to also read what values are stored in a preset, you would have to recall first and anyway, but then you could query the four output values directly to know what a specific preset has stored:

Nr.	Command	Description
1	**VOLT?**	Queries the output voltage set value, as previously recalled from a preset
2	**CURR?**	Queries the output current set value, as previously recalled from a preset
3	**VOLT:PROT?**	Queries the OVP threshold value, as previously recalled from a preset
4	**CURR:PROT?**	Queries the OCP threshold value, as previously recalled from a preset

5.4.17 Commands for the extended PV simulation

ELR9	ELR5	PS9	PSI9	PSI5	PSE	DT	PST	PSIT	EL3	PSB	PSBE	PS3	PS2	PS1	PSI1	PSB1	PSBE1	ELR1
–	–	–	✓	–	–	–	–	–	–	✓	–	–	–	–	✓	✓	–	–

Photovoltaics simulation is a function based on the XY generator and is only featured with some power supply series. With date 05/2022 these are:

- PSI 9000 2U - 24
- PSI 10000
- PSB 9000 / PSB 10000

The extended solar module simulation according to **DIN EN 50530** is supported by the above listed series since firmwares KE 2.19/HMI 2.11 (PSI 9000), KE 2.25/HMI 2.04 (PSB 9000) and KE/HMI 2.01 (PSB/PSI 10000). This means, this function can be retrofitted for older devices by installing an update.

All simulation related parameters, as settable with the below listed commands, are specified and described in the norm. Thus the norm paper is considered as additional reference to further information.

5.4.17.1 General configuration

Command	Description
FUNCtion:PHOTovoltaics:MODe␣{OFF | ET | UI | DAYET | DAYUI} **FUNCtion:PHOTovoltaics:MODe?**	General mode selection for the PV simulation **OFF** = simulation mode off (default) **ET** = Continuous mode, temperature and irradiation can be varied during simulation **UI** = Continuous mode, voltage and current of the MPP can be varied during simulation **DAYET** = Day trend mode, no values can be varied, the data set consists of an index, a temperature value, an irradiation value and a dwell time **DAYUI** = Day trend mode, no values can be varied, the data set consists of an index, MPP voltage and current values and a dwell time
FUNCtion:PHOTovoltaics:IMODe␣{MPP | ULIK} **FUNCtion:PHOTovoltaics:IMODe?**	Input mode (applies to all modes selectable with :MODe command, also see matrix and examples in *5.5.3*) **MPP** = The base values to calculate the PV curve from are entered as Umpp and Impp. These values are adjustable simulation mode **UI** (default) **ULIK** = The base values to calculate the PV curve from are entered as U_{OC} (open circuit voltage) and I_{SC} (short-circuit current). These values are adjustable in simulation mode **ET**

5.4.17.2 Day trend mode configuration

The below listed commands can only be used if any of the day trend modes **DAYET** or **DAYUI** (see above) has been set before and will else return an error.

It's recommended to clear the old day data with :DAY CLEAR command before loading a new set, especially if the new set is shorter.

Commands	Description
FUNCtion:PHOTovoltaics:DAY:INTerpolate␣{ON | OFF} **FUNCtion:PHOTovoltaics:DAY:INTerpolate?**	Only for modes **DAYET** and **DAYUI**: **ON** = Interpolation on **OFF** = Interpolation off (default)
FUNCtion:PHOTovoltaics:DAY:MODe␣{READ | WRITe} **FUNCtion:PHOTovoltaics:DAY:MODe?**	Only for modes **DAYET** and **DAYUI**: Day trend mode data access type **READ** = Read only (default) **WRITe** = Write only
FUNCtion:PHOTovoltaics:DAY␣CLEar	Only for modes **DAYET** and **DAYUI**: Clear all data

Commands	Description
FUNCtion:PHOTovoltaics:DAY:INDex␣<NR1> **FUNCtion:PHOTovoltaics:DAY:INDex?**	Only for modes **DAYET** and **DAYUI**: Select the data index (1...100,000) before re-reading day trend data. For writing day trend data, this index values is ignored. Use the index in FUNC:PHOT:-DAY:DAT command instead.
FUNCtion:PHOTovoltaics:DAY:DAT␣{<NR1>, <NR2>, <NRf>, <NR1>} **FUNCtion:PHOTovoltaics:DAY:DAT?**	Only for modes **DAYET** and **DAYUI**: Write one set of day trend data (4 values) or read them back from it, which requires prior index selection. Depending on the selected day trend mode, different data is returned upon read or must be provided when writing.
	Mode **DAYET**:
	1. value = index, range: 1- 100000
	2. value = irradiation in W/m², range: 0-1500
	3. value = temperature in °C, range: -40...+80
	4. value = Dwell time of index in ms, range: 500...1800000 (^=0,5s...0,5h)
	Mode **DAYUI**:
	1. value = index, range: 1-100000
	2. value = Umpp in V, range: 0...rated voltage
	3. value = Impp in A, range: 0...rated current
	4. value = Dwell time of index in ms, range: 500...1800000 (^=0,5s...0,5h)
FUNCtion:PHOTovoltaics:TECHnology␣{MAN | CSI | THIN} **FUNCtion:PHOTovoltaics:TECHnology?**	Panel technology preselection. Determines if some simulation parameters are fixed or accessible **MAN** = Manual mode (all parameters unlocked) **CSI** = cSi technology panel (default) **THIN** = thin film technology panel

5.4.17.3 Data recording

The device can record data while the PV simulation is running in any mode. It records up to 576,000 data sets with 6 values each (actual values of U, I, P and MPP values U, I, P). The recording can be started with the simulation or while it runs. Once the internal memory is filled, it overwrites from the beginning and the number of recorded data sets (:REC:NUM?) is reset to 0 . There is one new data set recorded every 100 ms, so that it covers a total time of exactly 16 hours.

The recording is either stopped at the end of the simulation or on purpose by the user. After the stop, the recorded data can be read set by set. In case they are need to be saved, they should be read as long as the unit is powered, because the internal memory data isn't stored.

Command	Description
FUNCtion:PHOTovoltaics:RECord:ACTive␣{ENABle | DISable} **FUNCtion:PHOTovoltaics:RECord:ACTive?**	Data recording **ENABle** = activated **DISable** = deactivated (default)
FUNCtion:PHOTovoltaics:RECord␣CLEar	Clear recorded data
FUNCtion:PHOTovoltaics:RECord:NUMBer?	Number of already recorded data sets (1...576,000)
FUNCtion:PHOTovoltaics:RECord:INDex␣<NR1> **FUNCtion:PHOTovoltaics:RECord:INDex?**	Set or read the index number (1...576,000) prior to read a data set with **:DATa?** command

Command	Description
FUNCtion:PHOTovoltaics:RECord:DATa?	Read data set X from the previously selected index. The device will then return following values separated by commas, representing a snapshot from a certain time: 1. value = Index number 2. value = Actual voltage on the DC output 3. value = Actual current on the DC output 4. value = Actual power on the DC output 5. value = Umpp (voltage in the MPP) 6. value = Impp (current in the MPP) 7. value = Pmpp (power in the MPP)

After selecting the index with FUNC:PHOT:REC:IND, prior to reading the data set, it requires some time (<5 ms) to pass before the device can return the true data of the index from an internal buffer. Being too early with the request command will cause the device to write an error into the error queue. After data reception the correct data can be verified by comparing the index number in the data set with the index you selected with FUNC:PHOT:REC:IND.

After simulation start the device will calculate the first PV curve. This takes about 500 ms. But the first data set is already recorded 100 ms after simulation start, so the first 3-4 data set are erroneous. This won't be the case if the recording is started at least 500 ms after the simulation start.

5.4.17.4 Status commands

Status commands and those which read result values from the simulation can be used at any time, but it's recommend to carefully chose the moment and order of use.

Command	Description
FUNCtion:PHOTovoltaics:MPP:VOLTage?	Voltage in the MPP, in V. The MPP results from the PV simulation curve, which is calculated by the given simulation settings. The voltage can be between 0 and the rated device voltage.
FUNCtion:PHOTovoltaics:MPP:CURRent?	Current in the MPP, in A. Can be between 0 and rated current.
FUNCtion:PHOTovoltaics:MPP:POWer?	Power in the MPP, in A. Can be between 0 and rated power.
FUNCtion:PHOTovoltaics:STATe?	PV simulation status **STOP** = Simulation has stopped normally, either due to user action or end of day trend **RUN** = Simulation running **ERROR MODE** = Simulation didn't start due to and error during PC curve calculation in simulation modes **ET** or **UI** **ERROR DAY** = Simulation didn't due to and error during PC curve calculation in simulation modes **DAYET** or **DAYUI** **ERROR ALARM** = Simulation has stopped due to a device alarm **ERROR INTERPOLATION** = Simulation not started due to a wrong dwell time value in day trend data index 1
FUNCtion:PHOTovoltaics:DAY:NUMBer?	Number of accepted day trend indexes. When transferring day trend data to the device, this counter counts up every time an index is successfully transferred and accepted. Can ve used to verify written data.
FUNCtion:PHOTovoltaics:OCVoltage?	Open circuit voltage of the simulated solar panel, calculated with a formula according to the standard. The values is affected by the selected simulation mode, the standard panel parameters (see below) and the calculation factors (also see below).
FUNCtion:PHOTovoltaics:SCCurrent?	Short-circuit current of the simulated solar panel, calculated with a formula according to the standard. The values is affected by the selected simulation mode, the standard panel parameters (see below) and the calculation factors (also see below).

5.4.17.5 Parameter commands

The commands listed below are used to set or read all the values required for the different PV simulation modes and the PV curve calculation. Not all commands can be written anytime. When trying to write some value it's important what simulation mode (ET, UI, DAYET, DAYUI) and what input mode (MPP, ULIK) is currently set. The matrix below indicates what commands are supported in what mode. A third setting, the technology (MAN, CSI, THIN) also determines if a specific parameter is locked from writing, but instead is internally setup with a value according to the DIN EN 50530 standard. Reading the parameters is possible anytime and in every mode.

Command	Writable in mode:				
	MPP	ULIK	MAN	CSI	THIN
FUNCtion:PHOTovoltaics:FACTor:FFU␣<NR2> **FUNCtion:PHOTovoltaics:FACTor:FFU?** Fill factor for voltage (FF_U). Only writable if the technology is set to MAN. Has impact on the PV curve calculation with formula according to standard. Range: >0...1	✓	✓	✓	—	—
FUNCtion:PHOTovoltaics:FACTor:FFI␣<NR2> **FUNCtion:PHOTovoltaics:FACTor:FFI?** Fill factor for current (FF_I). Only writable if the technology is set to MAN. Has impact on the PV curve calculation with formula according to standard. Range: >0...1	✓	✓	✓	—	—
FUNCtion:PHOTovoltaics:FACTor:ALPHa␣<NR2> **FUNCtion:PHOTovoltaics:FACTor:ALPHa?** Temperature coefficient α (in 1/°C) for the short-circuit current. Only writable if the technology is set to MAN. Has impact on the PV curve calculation with formula according to standard. Range: >0...1	✓	✓	✓	—	—
FUNCtion:PHOTovoltaics:FACTor:BETA␣<NRf> **FUNCtion:PHOTovoltaics:FACTor:BETA?** Temperature coefficient β (in 1/°C) for the open circuit voltage. Only writable if the technology is set to MAN. Has impact on the PV curve calculation with formula according to standard. Range: -1...<0	✓	✓	✓	—	—
FUNCtion:PHOTovoltaics:FACTor:CU␣<NR2> **FUNCtion:PHOTovoltaics:FACTor:CU?** Scaling factor C_U for the open circuit voltage. Only writable if the technology is set to MAN. Has impact on the PV curve calculation with formula according to standard. Range: >0...1	✓	✓	✓	—	—
FUNCtion:PHOTovoltaics:FACTor:CR␣<NR2> **FUNCtion:PHOTovoltaics:FACTor:CR?** Scaling factor C_R in m²/W or the open circuit voltage. Only writable if the technology is set to MAN. Has impact on the PV curve calculation with formula according to standard. Range: >0...1	✓	✓	✓	—	—
FUNCtion:PHOTovoltaics:FACTor:CG␣<NR2> **FUNCtion:PHOTovoltaics:FACTor:CG?** Scaling factor C_G in W/m² for the open circuit voltage. Only writable if the technology is set to MAN. Has impact on the PV curve calculation with formula according to standard. Range: >0...1	✓	✓	✓	—	—
FUNCtion:PHOTovoltaics:STANdard:OCVoltage␣<NR2> **FUNCtion:PHOTovoltaics:STANdard:OCVoltage?** U_{OC} (open circuit voltage) of the simulated solar panel in V. Range: 0 - rated voltage	—	✓	✓	✓	✓
FUNCtion:PHOTovoltaics:STANdard:SCCurrent␣<NR2> **FUNCtion:PHOTovoltaics:STANdard:SCCurrent?** I_{SC} (short-circuit current) of the simulated solar panel in A. Range: 0 - rated current	—	✓	✓	✓	✓
FUNCtion:PHOTovoltaics:STANdard:MPP:VOLTage␣<NR2> **FUNCtion:PHOTovoltaics:STANdard:MPP:VOLTage?** Voltage in the MPP of the simulated solar panel, in V. Range: 0 - rated voltage	✓	—	✓	✓	✓
FUNCtion:PHOTovoltaics:STANdard:MPP:CURRent␣<NR2> **FUNCtion:PHOTovoltaics:STANdard:MPP:CURRent?** Current in the MPP of the simulated solar panel, in A. Range: 0 - rated current	✓	—	✓	✓	✓

5.4.17.6 Control commands

These commands are used to control the PV simulation, usually after a successful configuration. In some modes, one or two parameters are adjustable while the simulation is running. Any change of parameter requires to re-calculate the PV curve which overwrites previous curve data. Depending on what point on the curve the simulation currently is, the point will shift after a certain calculation and response time.

Command	Description
FUNCtion:PHOTovoltaics:STATe␣{RUN | STOP} **FUNCtion:PHOTovoltaics:STATe?**	Start/stop simulation **RUN** = Triggers PV curve calculation and succeeding simulation start, if there is no error occurring. If data recording is activated, it will also start **STOP** = Simulation and possibly running data recording are stopped
FUNCtion:PHOTovoltaics:TEMPerature␣<NRf> **FUNCtion:PHOTovoltaics:TEMPerature?**	Only available in mode **ET**: Solar module temperature in °C. Range: -40...+80
FUNCtion:PHOTovoltaics:IRRadiation␣<NR1> **FUNCtion:PHOTovoltaics:IRRadiation?**	Only available in mode **ET**: Irradiation in W/m². Range: 0-1500

5.4.17.7 Error situations

An error situation occurs when the configured simulation can't be started or it has started already and was running for a while, but then unexpectedly stopped. Command **FUNCtion:PHOTovoltaics:STATe?** (see section *5.4.17.4*) can help in both cases to identify the cause of the error.

Following generally applies:

- Once stopped for any reason, the simulation can't be continued
- Data from the data recording feature can be read during the simulation or after the stop, as long as the device remains powered
- All configuration parameters are not stored and are reset when power-cycling the device

5.4.18 Commands for the battery test function

ELR9	ELR5	PS9	PSI9	PSI5	PSE	DT	PST	PSIT	EL3	PSB	PSBE	PS3	PS2	PS1	PSI1	PSB1	PSBE1	ELR1
✓	–	–	–	–	–	✓(1	–	–	✓	✓	–	–	–	–	–	✓	–	✓

(1 Except for PSI 9000 DT series

Electronic load series and also bidirectional power supplies feature a battery test function, which can be installed via firmware update for older production dates. With date 04/2019 remote battery test configuration and control is available for select series. It offers the almost same handling and settings as with manual control on the device's HMI.

Additionally to the separate battery test modes for charging and discharging, the PSB series offer a combined mode of both called the "Dynamic test". This isn't to be confused with the separate "Dynamic discharge" test as named on the HMI. This extra is available since 03/2020 via a firmware update.

5.4.18.1 Configuration commands

The battery test configuration can be done in the same sequence of commands as listed by the tables below. The very first thing to do is always to select the test mode. Details about the battery test modes are in the user manual of the series supporting this feature.

Command	Description
[SOURce:]BATTery:MODe␣{IDLE | STATic | CHARge | DYNamic | COMBined} **[SOURce:]BATTery:MODe?**	Selects battery test mode or queries the selected mode: **IDLE** = no mode selected, also used to leave battery test mode) **STATic** = Select mode "static discharge" **DYNamic** = Select mode "dynamic discharge" Additional battery test modes, only available with PSB series: **CHARge** = Select mode "static charge" **COMBined** = Dynamic test mode which combines static charge and static discharge modes

The following commands only work for sending or reading values <u>after</u> any of the discharge modes (**STATIC** or **DYNAMIC**) has been selected:

Command	Description
[SOURce:]BATTery:CURRent␣<NR2> **[SOURce:]BATTery:CURRent?**	Only for <u>static</u> discharge mode: Set the (discharge) current in Amperes. The command doesn't work in mode **DYN**. Range: 0...I-max
[SOURce:]BATTery:POWer␣<NR3> **[SOURce:]BATTery:POWer?**	For <u>static</u> and <u>dynamic</u> discharge mode: Set the maximum power in Watts. Constant power regulation can override constant current, so it may adjust the discharge current according to I = P/U to lower than defined by **BATT:CURR**. Range: 0...P-max
[SOURce:]BATTery:RESistance␣<NR2> **[SOURce:]BATTery:RESistance?**	For <u>static</u> or <u>dynamic</u> discharge mode: Switches resistance mode for the test on or off and sets the resistance value in Ohms. Constant resistance regulation can override constant current, so it may adjust the discharge current according to I = U/R to lower than defined by **BATT:CURR**. NR2 = 0 = resistance mode off NR2 = min. R ... max. R = set resistance

The below commands are for both discharge test modes and define one or several stop conditions which can cause the battery test to stop automatically if any of these conditions becomes true:

Command	Description
[SOURce:]BATTery:DISCharge:VOLTage␣<NR2> **[SOURce:]BATTery:DISCharge:VOLTage?**	Defines the discharge voltage in Volts. Once the battery voltage reaches this threshold, the test will stop. Range: 0...U-max

Command	Description
[SOURce:]BATTery:DISCharge:CAPacity␣<NR2> **[SOURce:]BATTery:DISCharge:CAPacity?**	Defines the max. battery capacity to consume before the test can either stop or cause the device to write a message into its display and the status. Range: 0...99999.99 Ah
[SOURce:]BATTery:ACTion:CAPacity␣{ NONE | SIGNal | END} **[SOURce:]BATTery:ACTion:CAPacity?**	Defines the action upon reaching the limit as defined by **BATT:DIS:CAP**. **NONE** = no action (the limit will be ignored) **SIGNal** = test continues, but the device will signal that the limit has been reached **END** = test will be stopped
[SOURce:]BATTery:DISCharge:TIME␣<Time2> **[SOURce:]BATTery:DISCharge:TIME?**	Defines the max. time to run the battery test, after which the test can either stop or cause the device to write a message into its display and the status. Range: 00:00:00 ... 10:00:00
[SOURce:]BATTery:ACTion:TIME␣{ NONE | SIGNal | END} **[SOURce:]BATTery:ACTion:TIME?**	Same as **BATT:ACT:CAP**, but here for the max. test time as it can be defined with **BATT:DIS:TIME**.

When using the dynamic discharge test mode, a pulsed current is generated which is defined by a rectangle with adjustable amplitude and duty cycle. The discharge current for this mode is thus defined from several command.

Following commands only work in mode **DYNAMIC**:

Command	Description
[SOURce:]BATTery:INDex␣<NR1> **[SOURce:]BATTery:INDex?**	Select one out of 4 parameters (range: 0...3) from which the rectangle for the pulsed current is defined: **0** = Level 1 of the amplitude Range: 0...I-max (adjustment limit) **1** = Level 2 of the amplitude Range: 0...I-max (adjustment limit) **2** = Time of level 1 Range: 0...36000 s **3** = Time of level 2 Range: 0...36000 s
[SOURce:]BATTery:PULSe␣<NR2> **[SOURce:]BATTery:PULSe␣<Time3>** **[SOURce:]BATTery:PULSe?**	Sets or reads the value from the index which was previously selected with **BATTery:INDex**. Values for the amplitude of current can be given in format <NR2> while the time values for indexes 2 and 3 require format <Time3>.

The **PSB** series, which can also charge a battery in source mode, feature another test mode: static charge (**CHARGE**). This mode works the same way as the static discharge, but inversed direction.

Command	Description
[SOURce:]BATTery:CHARge:VOLTage␣<NR2> **[SOURce:]BATTery:CHARge:VOLTage?**	Defines the charging voltage in Volts. The level depends on whether you want to have a precharge, boost charge or trickle charge. Range: 0...U-max
[SOURce:]BATTery:CHARge:CURRent␣<NR2> **[SOURce:]BATTery:CHARge:CURRent?**	Set the charge current in Amperes. The actual charge current will sink over time. Range: 0...I-max
[SOURce:]BATTery:CHARge:STOP:CURRent␣<NR2> **[SOURce:]BATTery:CHARge:CURRent?**	Set the charging end current in Amperes. Once this threshold is reached, the test will stop. Range: 0...I-max
[SOURce:]BATTery:CHARge:STOP:CAPacity␣<NR2> **[SOURce:]BATTery:CHARge:STOP:CAPacity?**	Defines the max. battery capacity to charge before the test can either stop or cause the device to write a message into its display and the status. Range: 0...99999.99 Ah

Command	Description
[SOURce:]BATTery:CHARge:STOP:TIME␣<Time2> **[SOURce:]BATTery:CHARge:STOP:TIME?**	Defines the max. time to run the battery test, after which it can either stop or cause the device to write a message into its display and the status. Range: 00:00:00 ... 10:00:00
[SOURce:]BATTery:ACTion:CAPacity␣{ NONE | SIGNal | END} **[SOURce:]BATTery:ACTion:CAPacity?**	Defines the action upon reaching the limit as defined by **BATT:CHAR:STOP:CAP**. **NONE** = no action (the limit will be ignored) **SIGNal** = test continues, but the device will signal that the limit has been reached **END** = test will be stopped
[SOURce:]BATTery:ACTion:TIME␣{ NONE | SIGNal | END} **[SOURce:]BATTery:ACTion:TIME?**	Same as **BATT:ACT:CAP**, but here for the max. test time as it can be defined with **BATT:CHAR:STOP:-TIME**.

The so-called **dynamic test (COMBINED),** which combines charging and discharging of a battery, is only available with the PSB series, as they can switch back and forth between source and sink mode. Details about this mode can be found in the user manuals of the PSB series.

Since the test combines the two single modes static charge and static discharge, some of their commands are re-used here for configuration of the single test phases. To have a better overview about the parameters which have to be configured for the test, some commands are copied in the tables below.

Commands for the <u>charging phase</u> configuration, given that **BATTery:MODe␣COMBined** has been set:

Command	Description
[SOURce:]BATTery:CHARge:VOLTage␣<NR2> **[SOURce:]BATTery:CHARge:VOLTage?**	Defines the charging voltage in Volts. The level depends on whether you want to have a precharge, boost charge or trickle charge. Range: 0...U-max
[SOURce:]BATTery:CHARge:CURRent␣<NR2> **[SOURce:]BATTery:CHARge:CURRent?**	Set the charge current in Amperes. The actual charge current will sink over time. Range: 0...I-max
[SOURce:]BATTery:CHARge:STOP:CURRent␣<NR2> **[SOURce:]BATTery:CHARge:CURRent?**	Set the charging end current in Amperes. Once this threshold is reached, the phase will stop. Range: 0...I-max
[SOURce:]BATTery:CHARge:TIME␣<Time2> **[SOURce:]BATTery:CHARge:TIME?**	Defines the max. time (in seconds) to run the phase. When reaching the defined time (max. 10 h), the phase will be ended. Alternatively, the charging end current can end the phase. Range: 00:00:01...10:00:00

Commands for <u>discharging phase</u> configuration, given that **BATTery:MODe␣COMBined** has been set:

Command	Description
[SOURce:]BATTery:COMBined:CURRent␣<NR2> **[SOURce:]BATTery:COMBined:CURRent?**	Set the discharge current in Amperes. Range: 0...I-max
[SOURce:]BATTery:DISCharge:VOLTage␣<NR2> **[SOURce:]BATTery:DISCharge:VOLTage?**	Set the charging end voltage (U_{DV}) in Volt. Once this threshold is reached, the phase will stop. Range: 0...U-max
[SOURce:]BATTery:DISCharge:TIME␣<Time2> **[SOURce:]BATTery:DISCharge:TIME?**	Defines the max. time (in seconds) to run the phase. When reaching the defined time (max. 10 h), the phase will be ended. Alternatively, the charging end current can end the phase. Range: 00:00:01...10:00:00

Commands for the remaining configuration, given that **BATTery:MODe␣COMBined** has been set:

Command	Description
[SOURce:]BATTery:COMBined:STOP:CAPacity␣<NR2> **[SOURce:]BATTery:COMBined:STOP:CAPacity?**	Defines the max. battery capacity to charge and/or discharge before the test can either stop or cause the device to write a message into its display and the status. This is a global value for both phases. Range: 0...99999.99 Ah
[SOURce:]BATTery:COMBined:STOP:TIME␣<Time2> **[SOURce:]BATTery:COMBined:STOP:TIME?**	Defines the max. time to run the test. When reaching the defined time, the test will be ended. This is a global value for both phases. Range: 00:00:01 ... 10:00:00
[SOURce:]BATTery:ACTion:CAPacity␣{ NONE | SIGNal | END} **[SOURce:]BATTery:ACTion:CAPacity?**	Defines the action upon reaching the limit as defined by **BATT:COMB:STOP:CAP**. **NONE** = no action (the limit will be ignored) **SIGNal** = test continues, but the device will signal that the limit has been reached **END** = test will be stopped
[SOURce:]BATTery:ACTion:TIME␣{ NONE | SIGNal | END} **[SOURce:]BATTery:ACTion:TIME?**	Same as **BATT:ACT:CAP**, but here for the max. test time as it can be defined with **BATT:COMB:STOP:-TIME**.
[SOURce:]BATTery:COMBined:TIME␣<Time3> **[SOURce:]BATTery:COMBined:TIME?**	Rest time between phases (in seconds). Range: 1...36000
[SOURce:]BATTery:COMBined:STARt␣{CHARge | DISCharge} **[SOURce:]BATTery:COMBined:STARt?**	Defines with what phases the test will start, either with the charging phase (**CHARge**) or discharging phase (**DISCharge**). After a phase has ended, the other one will run through. It means that both phases are always run through at least once per test.
[SOURce:]BATTery:COMBined:CYCLes␣<NR1> **[SOURce:]BATTery:COMBined:CYCLes?**	Defines how many times the test is run through. The test itself will only stop when either reaching the defined number of cycles or when any of the other stop criteria becomes true. Range: 0 (infinite cycles) or 1...999

5.4.18.2 Control and status commands

After successful battery test configuration the test can be started. Unless there will be no unexpected event such as an device alarm, the battery test will run and later stop upon the defined stop condition.

Command	Description
[SOURce:]BATTery:STATe␣{ RUN | STOP } **[SOURce:]BATTery:STATe?**	Starts the test or stops it manually and anytime before reaching a stop condition. **RUN** = Start test **STOP** = Stop test immediately
[SOURce:]BATTery:CONDition?	Queries the test condition. This can be done anytime, i.e. before, during or after the test. **IDLE** = test has not yet been started or has been stopped manually or due to an alarm **RUN** = test is running **FINISHED** = Test is finished as expected **ERROR** = Test stopped due to device alarm Further conditions: **SIGNAL AH** = Max. allowed number of Ah reached, test continues **SIGNAL TIME** = Max. allowed test time reached, test continues **END AH** = Max. allowed number of Ah reached, test stopped **END TIME** = Max. allowed test time reached, test stopped Further conditions (only available with bidirectional devices): **RUN, CHARGING** = test is running in the charging phase **RUN, DISCHARGING** = test is running in the discharging phase **RUN, RESTING** = test is resting between the two test phases

5.4.18.3 Test result commands

After test end, a few values can be read which represent the test result.

Command	Description
[SOURce:]BATTery:TEST?	Queries the test results. It should return a string with three values. Can also be queried while the test is running: 1. item: Consumed and/or supplied capacity in Ah 2. item: Consumed and/or supplied energy in Wh 3. item: Elapsed battery test time in format <Time2>
[SOURce:]BATTery:TEST {RESet | RESETAH | RESETWH | RESETTIME}	Used to reset all or specific test result values. This can be used to reset result data in between tests. The same effect is achieved when leaving battery test mode and entering it again. **RESet** = reset all result data to zero **RESETAH** = only resets the Ah value to zero **RESETWH** = only resets the Wh value to zero **RESETTIME** = only resets the time counter to zero

5.4.18.4 Tips and hints

- Consumed capacity isn't deducted from supplied capacity, same for energy.
- In order to get intermediate Ah and Wh values from a single phase or cycle of a longterm dynamic test, these two values could be read before and after a phase, perhaps during the rest period, to calculate the difference.
- If the max. 10 hours of a phase in dynamic test don't suffice, the whole dynamic test could also be achieved by moving the flow control into a custom control software which would then probably only use and configure the "Static Charge" and "Static Discharge" test modes, combining them with rest periods. Those single tests allow for a theoretically infinite testing time.
- The so called "dynamic test", as only available with bidirectional devices, combines one or several charging and discharging phases into a test flow. The counted values of Ah and Wh are always only counted up during the phase, so it's not possible to retrieve at the end the actual capacity or energy supplied to the battery.

5.4.19 Special syntax for PS 2000 B series with color TFT screen

5.4.19.1 Special commands

Command	Description
SYSTem:CONFig:TRACking␣{ ON | OFF } **SYSTem:CONFig:TRACking?**	Activates or deactivate the so-called tracking mode (see user manual of PS 2000 B TFT Triple models). Use and control of the tracking mode is the same as with manual handling, which means that after activation of tracking the 2nd output cannot be remotely controlled anymore, but only read from.

5.4.19.2 Extended command syntax

Series PS 2000 B TFT offers the Triple models, featuring two identical DC outputs assigned as Output 1 and Output 2, which can be separately controlled in remote. While ModBus used different register addresses to focus a specific output, SCPI requires a different approach. The SCPI standard allows for the use of a selector that assigns a command to one or the other output, but also even to both at once. Rule of thumb:

- If no selector is used, all commands will go to Output 1
- PSB 2000 B TFT Single models, with their single output, don't need a selector but logically support **(@1)**, while using **(@2)** on them would cause an error

Overview of the selectors and their combinations:

Selector	Description
(@1)	The command only addresses Output 1 (equal to a command without selector)
(@2)	The command only addresses Output 2
(@1,2) or **(@1:2)**	The command addresses Output 1 and Output 2 at once

Commands which require output selection with the Triple models:

Writes	Queries
	MEASURE[:SCALAR]:CURRENT[:DC]?
	MEASURE[:SCALAR]:POWER[:DC]?
	MEASURE[:SCALAR]:VOLTAGE[:DC]?
OUTPUT[:STATE]	**OUTPUT[:STATE]?**
[SOURCE:]CURRENT	**[SOURCE:]CURRENT?**
[SOURCE:]CURRENT:PROTECTION[:LEVEL]	**[SOURCE:]CURRENT:PROTECTION[:LEVEL]?**
[SOURCE:]CURRENT:LIMIT:HIGH	**[SOURCE:]CURRENT:LIMIT:HIGH?**
[SOURCE:]VOLTAGE	**[SOURCE:]VOLTAGE?**
[SOURCE:]VOLTAGE:PROTECTION[:LEVEL]	**[SOURCE:]VOLTAGE:PROTECTION[:LEVEL]?**
[SOURCE:]VOLTAGE:LIMIT:HIGH	**[SOURCE:]VOLTAGE:LIMIT:HIGH?**
SYSTEM:LOCK	**SYSTEM:LOCK:OWN?**

The selector is appended to the actual command, whereas there is a distinction in the syntax between write commands and query commands. Write commands require to use a comma.

Syntax examples for the output selection:

Command	Action
VOLT 29,(@1)	Sets 29 V for Output 1, has the same effect as **VOLT 29**
CURR?␣(@2)	Queries the set value of current from Output 2 -> Attention ! The space is required, else it will cause a syntax error!
SYST:LOCK ON,(@1:2)	Will switch both, Output 1 and 2, into remote control mode at once -> in case this command is used on a single output model, the error it causes has priority and the device wouldn't switch to remote control

5.4.19.3 Output related returns

Same as the requirement to select a specific output with the Triple models when writing a value, it's necessary to assign returns from the device to a specific output. This is only used on communication errors like you would query with **SYST:ERR:ALL?**, which is not a selective command. Example: the device returns **-221,"Settings conflict;@2"**. The **@2** marks this error as related to Output 2.

Other returns don't use a selector, but follow a simple logic:

- **VOLT?␣(@2)** returns, for instance, **20.45V**, but without selector, because the return comes immediately after the query which was explicitly addressed to Output 2
- **MEAS:ARR?␣(@1:2)** would return six comma separated values, of which the first three belong to Output 1 and the others to Output 2; also here is no extra assignment in form of a selector

5.4.20 EL 3000 B series specific commands

The 3000 series also support SCPI programming and of course share the standard commands with other series, but at least one feature is specific to the EL 3000 B series: the ramp generator. Ramp based wave generation qualifies it to be considered as a function generator for rectangular, triangular or trapezoidal standard waves. A special feature is the option to configure a different ramp setup at runtime and trigger the altered ramp at any point of the generation process. The basic concept is that the function is configured in the device and after start runs automatically until stopped by command or device error. The function data isn't stored, so every time the device is started after power-up, the configuration has to be written again, which also means the device cannot run standalone.

5.4.20.1 Ramp generator configuration commands

Similar to the function generator of other series, the ramp generator can be assigned to either current or voltage. The other values U/P or I/P would then be static. The wave is based on ramps defined by several time values and two levels. This results in a short configuration with only a few commands.

Clarification of the assignment:

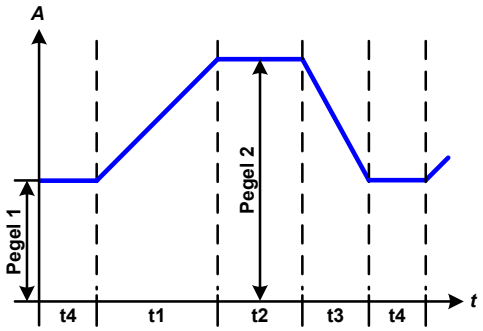

Level 1: lower level (short: P1)
Level 2: upper level (short: P2)
t1 = Time of the static part on the lower level
t2 = Time of the rising ramp
t3 = Time of the static part on the upper level
t4 = Time of the falling ramp

Command	Description
[SOURce:]FUNCtion:RAMP:SELect␣{VOLTage | CURRent | NONE} **[SOURce:]FUNCtion:RAMP:SELect?**	Selects the assignment of the generated ramp to either **VOLTage** or **CURRent** or **NONE** of both, or queries the last selection. This command must be sent first before writing further configuration parameters, also even when only reading.
[SOURce:]FUNCtion:RAMP:INDex␣{0...3} **[SOURce:]FUNCtion:RAMP:INDex?**	Selects one of the six parameters that have to be configured for the wave. **0** = Lower level P1 and time t1 (rising edge, P1 -> P2) **1** = Upper level p2 and time t2 (dwell time of P2) **2** = Time t3 (falling edge, P2 -> P1) **3** = Time t4 (dwell time of P1 The upper level P2 is the endpoint for a rising edge, same as it's the starting point for a falling edge. The level itself is determined by the **:OFFSet** command which means to select the target level before. The two time values per level are given using two different index selections and by using the **:TIMe** command afterwards.
[SOURce:]FUNCtion:RAMP:OFFSet␣<NR2> **[SOURce:]FUNCtion:RAMP:OFFSet?**	*Only works with index 0 or 1 being selected, as described above.* Defines the level of voltage or current in per cent of the rated value and depending on the selected generator assignment (**:SELect** command). The range here is 0...100% of U_{Nom} or 0...I_{Nom}
[SOURce:]FUNCtion:RAMP:TIMe␣<NR1> **[SOURce:]FUNCtion:RAMP:TIMe?**	Defines the with **:INDex** selected time value. The value is given in microseconds in a range (all four time values) of: 10 µs ... 6,000,000,000 µs (6 billion), which translates into 100 minutes. **There is step width of 10, so values which are not a clear magnitude of 10 are rounded up or down upon reception**. The total time of all wave parts must be less or equal to 100 minutes. One of the four times can use the full 100 minutes, but requires to set the other three times to the minimum of 10 µs.

Hints for the configuration part:

- The order of index selection is not defined
- Should the level of P1 be higher than P2, the wave will be inverted

5.4.20.2 Ramp generator control

Command	Description
[SOURce:]FUNCtion:RAMP:STATe␣{RUN | STOP} **[SOURce:]FUNCtion:RAMP:STATe?**	Controls the function generator. Start with **RUN** and later **STOP** at anytime.
[SOURce:]FUNCtion:RAMP:TRIGger␣{TRIGger}	Triggers the immediate transfer of a new configuration, loaded in the background at runtime. Should the controlling software count the elapsed time of the function run, the trigger moment could placed ideally at the end of one wave.

Programming examples can be found in *„5.5.5. Programming examples for EL 3000 B ramp generator“*.

5.5 Example applications

5.5.1 Configure and control master-slave with SCPI

ELR9	ELR5	PS9	PSI9	PSI5	PSE	DT	PST	PSIT	EL3	PSB	PSBE	PS3	PS2	PS1	PSI1	PSB1	PSBE1	ELR1
✓	–	–	✓	–	✓	–	–	–	–	✓	✓	–	–	✓	✓	✓	✓	✓

Certain device series which feature true master-slave (short: MS) with totals formation via a dedicated master-slave bus also support the full remote configuration and control of the system. In a MS system, usually only the master unit is remotely controlled, while the slaves are usually not connected to the PC, except for the moment when being configured remotely as slave. It's thus recommended to configure the MS system on the control panels of the units and only put the master into remote control via any software. Even if you would configure all units manually on the control panel, the remote control software could later read the status of the MS init from the master. The initialization of the MS system is done automatically every time the master is powered, but can be triggered and repeated by command.

Let's assume following example configuration: five power supplies **PSI 9080-510 3U** (80 V, 510 A, 15 kW) in parallel. The master has to display itself as an 80V, 2550 A , 75 kW and 1 Ω (max. resistance) unit after successful configuration and initialization. These values are also the temporary new ratings of the MS system. The same way as with manual control, the "Limits" and set values can be adjusted in 0...102% of the rated value, while protection values have a range of 0..110% (most series) or 0...103% (specific load series).

The exemplary step-by-step guide below is separated into steps, because some steps are optional.

Part 1a: Configure the master

1. Activate remote control: **SYST:LOCK␣ON**
2. Activate master-slave mode: **SYST:MS:ENABLE␣ON**
3. Define the unit as master: **SYST:MS:LINK␣MASTER**
4. (when running two-quadrants operation and the master is an electronic load):
   Set the master load as Share bus slave: **SYST:SHAR:LINK␣SLAVE**

Part 1b: Configure the slave(s), in case it's connected to the controlling unit (PC, PLC etc.)

5. Activate remote control: **SYST:LOCK␣ON**
6. Activate master-slave mode: **SYST:MS:ENABLE␣ON**
7. Define the unit as slave: **SYST:MS:LINK␣SLAVE**

If there is more than one slave, repeat steps 5-7 for the other slave(s).

Part 2: Initialise the MS system

8. Activate remote contol, in steps 1-7 were not processed, because system was already configured: **SYST:LOCK␣ON**
9. Trigger initialisation, then wait a few seconds: **SYST:MS:INIT**

Part 3: Further, optional steps

10. Query the initialisation status from the master, in order to analyse it: **SYST:MS:COND?**
11. Query the number of units initialised for the MS system (should be 5 with this example): **SYST:MS:UNIT?**
12. Query the nominal current of the MS system: **SYST:NOM:CURR?**
13. Query the nominal power of the MS system: **SYST:NOM:POW?**
14. Query the maximum resistance of the MS system: **SYST:NOM:RES:MAX?**
15. Query the minimum resistance of the MS system: **SYST:NOM:RES:MIN?**
16. Configure protection values, for example OCP: **CURR:PROT␣400**
17. Configure events, for example,
    - set OCD to 2100 A: **SYST:CONF:OCD␣2100**
    - then define the alarm type for OCD to "warning": **SYST:CONF:OCD:ACT␣WARNING**

The adjustment limits ("Limits") require extra treatment, because they are tied to the set values. Means, with the set values being reset to defaults during the MS init, for example the set value of current would be at maximum and thus the related adjustment limit I_{Max} can't be set lower than this without prior changing the set value.

18. Narrow the adjustable range of values, for example limit the max. current set value to 2200 A
    - First, set the current value down to anything lower than the desired limit, like the minimum: **CURR␣MIN**
    - Second, set the adjustment limit to the value translated for the master unit: **CURR:LIM:HIGH␣2200**

With these settings applied, the current should be at 0, because the lower adjust limit has not yet been changed. The current will be monitored for the threshold of 2100 A by the event system and since it's adjustable up to 2200 A, the true current might exceed the threshold and cause an OCD event, which would only generate a warning on screen, but not switch off the DC output.

19. To start working with your MS system, switch the DC output on: **OUTP␣ON**

The system will remain configured and keep the settings when power-cycling it. The master unit has to initialize the MS and the slaves at least one time after power-up. The status of the first automatic initialization can be read from the master in your custom software and depending on the result, the software could trigger further steps like the ones listed above, probably from at least step 8 or if required even from step 1.

5.5.2 Programming examples for the function generator

5.5.2.1 General command sequence for the arbitrary generator

ELR9	ELR5	PS9	PSI9	PSI5	PSE	DT	PST	PSIT	EL3	PSB	PSBE	PS3	PS2	PS1	PSI1	PSB1	PSBE1	ELR1
✓	–	–	✓	–	–	✓	–	✓	–	✓	–	–	–	–	✓	✓	–	✓

Let's say you wanted to apply a sine wave with 30 A amplitude and 10 Hz frequency for 60 s to the DC input current of an electronic load. This can be achieved by setting up just one sequence point. Let's use sequence point number 12. Because this is about DC current, the amplitude also requires an offset. The amplitude is usually understood as the difference between the base line and the peak point of the sine wave. The base line is here defined by Start(DC) and End(DC) values. Also see the device's user manual about the definition of these parameters, as well as section *5.4.12.5*. In this example, the offset, which defines the base line, then has to be at least 30 A, so let's say we take 50 A. This will result in a DC input current varying sinusoidally between 20 A and 80 A.

The sine wave, when applied to DC voltage or current, emulates AC characteristics and thus requires to set at least indexes 0, 1, 2, 3, 5, 6 and 7, according to the table in *5.4.12.5*. As long as no specific start angle is required, index 4 can be skipped, because the default value is 0°.

Setting the global set values to maximum or any other value is also necessary when using the function generator, especially when running multiple devices in master-slave where those set values are used to limit the slaves.

When loading the arbitrary function generator with sequence point data, following rules apply:

- When also using the AC part of a sequence point, i. e. when generating a sine wave, the value(s) for the DC part must be set first
- When using ramps, i. e. DC start value is different to DC end value, there is a certain minimum ratio between the voltage difference and the time per sequence point, here called min. slew rate; this applies to many series, but not anymore to 10 k series devices which already have a specific minimum KE firmware version installed -> should you receive an error when writing sequence data it's most likely due to the min. slew rate not met
- The time of the sequence point should be written as last values because it's used to trigger the slew rate check

Given that the device is already in remote control and the DC input or DC output is off, following command sequence would be necessary:

No.	Command	Description	Register
1	**FUNC:GEN:SEL CURR**	Selects arbitrary generator for current. By sending this command the device will switch to function generator mode	852
2	**FUNC:GEN:WAVE:LEV␣12**	Selects the 12th sequence for writing values	1092
3	**FUNC:GEN:WAVE:IND␣5**	Select index 5: Start value of DC part or AC offset	
4	**FUNC:GEN:WAVE:DAT␣50**	Set wave offset to 50 A	1092
5	**FUNC:GEN:WAVE:IND␣6**	Select index 6: End value of DC part or AC offset	
6	**FUNC:GEN:WAVE:DAT␣50**	Set wave offset to 50 A. If the offset shall not change during the function run, end and start value have to be identical.	1092
7	**FUNC:GEN:WAVE:IND␣2**	Select index 2: Start frequency of sine wave	
8	**FUNC:GEN:WAVE:DAT␣10**	Set start frequency to 10 Hz	1092
9	**FUNC:GEN:WAVE:IND␣3**	Select index 3: End frequency of sine wave	
10	**FUNC:GEN:WAVE:DAT␣10**	Set end frequency to 10 Hz. If the frequency shall not change during the function run, end and start value have to be identical.	1092

No.	Command	Description	Register
11	**FUNC:GEN:WAVE:IND␣0**	Select index 0: Start value of sine wave amplitude	
12	**FUNC:GEN:WAVE:DAT␣30**	Set amplitude to 30 A	1092
13	**FUNC:GEN:WAVE:IND␣1**	Select index 1: End value of sine wave amplitude	
14	**FUNC:GEN:WAVE:DAT␣30**	Set amplitude to 30 A. If the amplitude shall not change during the function run, end and start value have to be identical.	1092
15	**FUNC:GEN:WAVE:IND␣7**	Select index 7: Sequence time	
16	**FUNC:GEN:WAVE:DAT␣60**	Set sequence point time to 60 s	1092
17	**FUNC:GEN:WAVE:END␣12**	Set end sequence point to 12	860
18	**FUNC:GEN:WAVE:STAR␣12**	Set start sequence point to 12	859
19	**FUNC:GEN:WAVE:NUM␣1**	Set number of sequence point cycles to 1, because that one sequence point will already run for 60 s. Alternatively, it's possible to define 1 s for the sequence point time and let it run through 60 cycles.	861
20	**FUNC:GEN:WAVE:SUBM**	Load the parameters from above into the function generator	

Now you should also define the global set values of U, I and P so they don't interfere with the expected function run.

Important for master-slave systems: the slave units don't run the programmed function, as they're controlled by the master via Share bus. It's thus essential to define these global values thoroughly and send them to the master which forwards them to all slaves, so they can work as expected.

In this example with a current sink (electronic load), it's recommended to set the voltage to 0 V, the power to maximum and the current to 105% or higher of the peak that would result from the sine wave current.

No.	Command	Description	Register
21	**VOLT␣0**	Set voltage to 0 V, so the device can clearly operate in current control mode	500
22	**POW␣MAX**	Power to max, independent from the device model	502 (498)

The function generator is now configured and sequence 12 is set up. You can start the function run now and control it remotely:

No.	Command	Description	Register
23	**INP␣ON** **OUTP␣ON**	Switch the DC input or DC output of your device on	405
24	**FUNC:GEN:WAVE:STAT␣RUN**	Start the function with **RUN**. After 60 s, the function will stop.	850
25	**FUNC:GEN:WAVE:STAT␣STOP**	Optional: stop/abort function run anytime. The DC input/output will remain on at first and can be switched off with the dedicated command, if necessary	850
26	**FUNC:GEN:SEL␣NONE**	Optional: leave function generator mode with **NONE**	852

5.5.2.2 Command sequence for the XY generator

ELR9	ELR5	PS9	PSI9	PSI5	PSE	DT	PST	PSIT	EL3	PSB	PSBE	PS3	PS2	PS1	PSI1	PSB1	PSBE1	ELR1
✓	–	–	✓	–	–	–	–	✓	–	✓	–	–	–	–	✓	✓	–	✓

Configuration and loading of table data for the XY generator is very similar to the procedure of the arbitrary generator. Assumption: you want to have the DC input current of an electronic load react to the input voltage. This is were the XY generator suits well with its IU function.

The IU table with its data determines the current to draw from the source for the entire input voltage range, which is resolved in 4096 values. With this you can define everything you want, like for example the current to remain 0 A below a certain input voltage threshold. The desired current curve could be created in Excel or similar tools and exported as CSV file. Because the measurement range of the referenced values is defined as 0...125% of the rated value, even though some electronic loads would also switch off at 103% due to overvoltage, the depending value is only effective in the 0...100%rang. The point of 100% is at table entry 4096/1.25 = 3276. It means that all table values above entry 3276 actually have no effect and could remain 0.

There is furthermore a global power limitation, so the device can not make 100% voltage at 100% current. When creating the table in Excel or similar, it might help to add another two columns which are later not exported to CSV, of course. One column where the referenced value is distributed between 0....125% nominal value over the 4096 entries, and another where the power is calculated for every entry (P = U * I), to find out which of the entries could not be physically realized by the device.

Caution! It's not advisable to have big value differences between two or a group of consecutive table entries. Rather use values that change voltage/current less abrupt.

No.	Command	Description	Register
1	**FUNC:GEN:SEL␣IU** Additionally for PSB series: **FUNC:GEN:SEL␣IUPS** **FUNC:GEN:SEL␣IUEL**	Select the IU mode for the XY generator, i. e. I = f(U). This will switch to function generator mode. IU table only in source mode IU table only in sink mode	855 856 856
2	**FUNC:GEN:XY:LEV␣0**	Select table entry 0 for writing	2600
3	**FUNC:GEN:XY:DAT␣0**	Write a current value to the table entry, here: 0 A (random value)	2600
...			
8192	**FUNC:GEN:XY:3276**	Select table entry 3276 for writing	5875
8193	**FUNC:GEN:XY:DAT␣120**	Write a current value to table entry 3276, here: 120 A (example)	5875
8194	**FUNC:GEN:XY:SUBM**	Submit all data	

Now it's advised to also define the set values which are not altered by the table, else the function could run without any effect. It means, if you load an UI table, the voltage is fetched from the values in the table, but current and power are static and could have any value from previous adjustment.

For an IU table, voltage and power are static. You can set the static values to any value you like, but in order for the static set values not to interfere in the UI or IU function run, it's recommended to set both to maximum:

No.	Command	Description	Register
8195	**VOLT␣MAX** or **CURR␣MAX**	Set voltage and current to maximum. You may also chose any other value which should be at least as high as the biggest value in the XY table.	500 501
8196	**POW␣MAX**	Power to max, independent from the device model	502
	Additionally for PSB series: **SINK:CURR␣MAX** **SINK:POW␣MAX**	Only required for **IU** and **IUEL** modes where the PSB device either only works in sink mode or could enter sink mode	499 498

After this, the function generator is configured and the IU table is loaded. Now the function can be started by remotely controlling the generator:

No.	Command	Description	Register
8197	**INP␣ON** **OUTP␣ON**	Switch the DC input or DC output of your device on	405
8198	**INP␣OFF** **OUTP␣OFF**	Later: switch the DC input or DC output of your device off to make the function stop	405
8199	**FUNC:GEN:SEL␣NONE**	Optional: leave function generator mode with **NONE**	855 (856)

5.5.2.3 Command sequence to generate a rising ramp (arbitrary generator)

ELR9	ELR5	PS9	PSI9	PSI5	PSE	DT	PST	PSIT	EL3	PSB	PSBE	PS3	PS2	PS1	PSI1	PSB1	PSBE1	ELR1
✓	–	–	✓	–	–	✓	–	✓	–	✓	–	–	–	–	✓	✓	–	✓

Before you can configure the arbitrary generator for a ramp it's necessary to think about the best way to achieve the ramp generation. It's important to keep in mind that the arbitrary generator stops at the end of the function run, unless you configure repetition. After a stop, the DC output remains switched on. In case of a ramp, this is wanted, because the end value shall usually remain set for some time. However, the device will go to static mode again, setting the static set values of U, I and P. The static values also apply for the period before the function run and when the DC output is already switched on.

The stop action and the static values are thus a little problematic for the ramp function. Why? Assuming you wanted to have a power supply generate a ramp starting from 0 V. The static value for U (voltage) would then be set to 0. But after the function stop, the device would also set 0 V and the voltage would drop from whatever value has been achieved at the end of the function run. Conclusion: the static value of voltage has to be part of the function setup. In order to achieve this, the function has to consist of two parts: one for the rising or falling ramp and the other for the static value. This can be done using two sequence points of the arbitrary generator.

Assumption: the ramp shall start from 0 V and rise to 50 V within 6 seconds. The end voltage shall remain constant for 3 minutes (the time can be varied at will), sequence points 1 and 2 are used. Remote control is already active, only configuration of the function is necessary. Since the ramp will make the voltage rise linearly, using only the DC part of a sequence point suffices while the parameters for the AC part (indexes 0 - 4) should probably be set to zero in order to avoid previously written values to disturb the wave generation. Particular commands which would achieve this are not included in this example.

Sequence point 1, the rising ramp

No.	Command	Description	Register
1	**FUNC:GEN:SEL␣VOLT**	Selects arbitrary generator for voltage. By sending this command the device will switch to function generator mode	851
2	**FUNC:GEN:WAVE:LEV␣1**	Select sequence point 1 for writing	900
3	**FUNC:GEN:WAVE:IND␣5**	Select index 5: Start voltage of the ramp	
4	**FUNC:GEN:WAVE:DAT␣0**	Set start voltage to 0 V	900
5	**FUNC:GEN:WAVE:IND␣6**	Select index 6: End voltage of the ramp	
6	**FUNC:GEN:WAVE:DAT␣50**	Set end voltage to 50 V	900
7	**FUNC:GEN:WAVE:IND␣7**	Select index 7: Ramp duration	
8	**FUNC:GEN:WAVE:DAT␣6**	Set 6 seconds	900

Sequence point 2, the static voltage at the ramp end

No.	Command	Description	Register
9	**FUNC:GEN:WAVE:LEV␣2**	Select sequence point 2 for writing	915
10	**FUNC:GEN:WAVE:IND␣5**	Select index 5: Start value of the static voltage,	
11	**FUNC:GEN:WAVE:DAT␣50**	Set to 50 V (must be identical to the end value of sequence point 1)	915
12	**FUNC:GEN:WAVE:IND␣6**	Select index 6: End value of the static voltage	
13	**FUNC:GEN:WAVE:DAT␣50**	Set to 50 V	915
14	**FUNC:GEN:WAVE:IND␣7**	Select index 7: Duration	
15	**FUNC:GEN:WAVE:DAT␣180**	Set to 3 minutes (180 seconds)	915

Configuring the arbitrary generator

No.	Command	Description	Register
16	**FUNC:GEN:WAVE:END␣2**	Set sequence point 2 as end sequence	860
17	**FUNC:GEN:WAVE:STAR␣1**	Set sequence point 1 as start sequence	859
18	**FUNC:GEN:WAVE:NUM␣1**	Number of cycles	861
19	**FUNC:GEN:WAVE:SUBM**	Submit all data	

The number of cycles is set to 1, so the function runs once and then stops. It could also repeat, but with every repetition after the 3 m 6 s, the voltage of the ramp would have to drop from 50 V to 0 V, where the ramp is defined to start, but it can't drop in zero time. How long it takes to drop to zero primarily depends on the connected load. The resulting ramp could be more or less malformed. In order to avoid that a third sequence could be configured which just gives the voltage some time to drop.

After this the ramp function is fully configured and can be started. If the DC output isn't yet switched on, it will be automatically when running the function. Alternatively, switching it on can also be done separately with the corresponding command. Here it's not required to do so, because the function starts from 0 V, but in case a function shall not start at 0, it would be necessary to switch on the DC output first.

No.	Command	Description	Register
20	**FUNC:GEN:WAVE:STAT␣RUN**	Run the function generator	850

Without repetition the function would stop after one run, after the total time defined as 3 m 6 s by the duration(s) of the sequence point(s) and the voltage would drop to zero. If you wanted to have the static value remain set for much longer, you could extended the duration of sequence point 2 or add a further sequence point which just adds time. With one sequence point you can achieve a duration of 10 h, so the static value could remain set for a maximum of 98 x 10 h = 980 h.

5.5.3 Programming examples for PV simulation (DIN EN 50530)

ELR9	ELR5	PS9	PSI9	PSI5	PSE	DT	PST	PSIT	EL3	PSB	PSBE	PS3	PS2	PS1	PSI1	PSB1	PSBE1	ELR1
–	–	–	✓	–	–	–	–	–	–	✓	–	–	–	–	✓	✓	–	–

Further information about this extended PV function can be found in the user manuals of your device, as well as in the standard EN 50530. The user manuals also teach about the connection between simulation mode, input mode and panel technology.

> *Important: after the simulation start the device will calculate the first PV curve table. This takes about 500 ms, so the actual simulation begins ≈ 500 ms after the start.*

Overview (an "x" marks a possible combination):

Options / Simulation mode	Input mode ULIK	Input mode MPP
ET	x	x (example 1)
UI	-	x (example 3)
DAY ET	x (example 2)	x
DAY UI	-	x (example 4)

5.5.3.1 Example 1

- Technology: cSi
- Input mode: MPP values
- Simulation mode: Continuous, with adjustable temperature and irradiation
- Recording: activated

Configuration

Nr.	Command	Description	Register
1	**SYST:LOCK␣ON**	Activate remote control	402
2	**FUNC:PHOT:MOD␣ET**	Activate PV simulation mode **ET**	12001
3	**FUNC:PHOT:TECH␣CSI**	Select technology: **cSi**	12016
4	**FUNC:PHOT:IMOD␣MPP**	Select input mode: **MPP**	12017

Nr.	Command	Description	Register
5	**FUNC:PHOT:STAN:MPP:VOLT␣20**	Set MPP voltage: 20 V	12050
6	**FUNC:PHOT:STAN:MPP:CURR␣5**	Set MPP current: 5 A	12051
7	**FUNC:PHOT:REC:ACT␣ENAB**	Activate data recording	12018
8	**POW␣MAX**	Set global power set value to maximum	502
9	**VOLT 30**	Set the global voltage limit (should be higher than Uoc)	500

- *The standard or start values, as set in steps 5 and 6, are only used to calculate the first PV curve. The MPP values (:STAN:MPP) are linked to the solar panel specs Uoc (:STAN:OCV) and Isc (:STAN:SCC) via the factors FFi and FFu. They overwrite each other. It means, that setting :STAN:MPP:VOLT overwrites the value in :STAN:OCV and vice versa*
- *Voltage and current in the MPP are connected via factors FFi and FFu to the open circuit voltage (Uoc) and the short-circuit current (Isc). Depending on the selected technology, these factors are not adjustable*
- *The first curve after function start is calculated with the default values T = 25°C and E = 1000 W/m² (E = from german "Einstrahlung" -> irradiation)*

Control (also during simulation run)

Nr.	Command	Description	Register
10	**FUNC:PHOT:STAT␣RUN**	Start simulation	12000
11	**FUNC:PHOT:TEMP␣40**	Adjust temperature value: 40 °C	12052
12	**FUNC:PHOT:IRR␣800**	Adjust irradiation: 800 W/m²	12053
13	**FUNC:PHOT:STAT␣STOP**	Stop simulation after an arbitrary time	12000

Analysis after simulation end

Nr.	Command	Description	Register
14	**FUNC:PHOT:REC:NUMB?**	Read number (n) of recorded data sets	12020
15	**FUNC:PHOT:REC:IND␣1**	Select first data set (index 1) for reading	12022
16	**FUNC:PHOT:REC:DAT?**	Read data from data set (index) 1	12024
...	...	Read further n-1 data sets:	...
x	**FUNC:PHOT:REC:IND␣n**	Select data set n (index n) for reading	12022
y	**FUNC:PHOT:REC:DAT?**	Read data from data set (index) n	12024

5.5.3.2 Example 2

- Technology: Manual
- Input mode: Open circuit voltage and short-circuit current
- Simulation mode: Day trend with adjustable temperature and irradiation
- Interpolation: deactivated
- Data recording: activated

Configuration

Nr.	Command	Description	Register
1	**SYST:LOCK␣ON**	Activate remote control	402
2	**FUNC:PHOT:MOD␣DAYET**	Activate PV simulation mode **DAY ET**	12001
3	**FUNC:PHOT:TECH␣MAN**	Select technology: Manual (all required parameters must be defined, here as with commands 4-10)	12016
4	**FUNC:PHOT:FACT:FFU␣0.8**	Fill factor voltage (**FF_U**): 0,8	12034
5	**FUNC:PHOT:FACT:FFI␣0.78**	Fill factor current (**FF_I**): 0,78	12036
6	**FUNC:PHOT:FACT:ALPH␣0.0003**	Temperature coefficient **α** for I_{SC}: 0,0003 /°C	12038
7	**FUNC:PHOT:FACT:BETA␣-0.003**	Temperature coefficient **β** for U_{OC}: -0,003 /°C	12040
8	**FUNC:PHOT:FACT:CU␣0.0725**	Scaling factor **C_U** for U_{OC}: 0,0725	12042

Nr.	Command	Description	Register
9	**FUNC:PHOT:FACT:CR␣0.00022**	Scaling factor C_R for U_{OC}: 0,00022 m²/W	12044
10	**FUNC:PHOT:FACT:CG␣0.00315**	Scaling factor C_G for U_{OC}: 0,00315 W/m²	12046
11	**FUNC:PHOT:IMOD␣ULIK**	Select input mode: **ULIK**	12017
12	**FUNC:PHOT:STAN:OCV␣38**	Set open circuit voltage: 38 V	12048
13	**FUNC:PHOT:STAN:SCC␣7**	Set short-circuit current: 7 A	12049
14	**FUNC:PHOT:REC:ACT␣ENAB**	Activate data recording	12018
15	**FUNC:PHOT:DAY:INT␣OFF**	Deactivate interpolation of day trend data	12005
16	**POW␣MAX**	Set global power set value to maximum	502
17	**VOLT 38**	Set the global voltage limit (should be ≥Uoc)	500

- *The standard or start values, as set in steps 5 and 6, are only used to calculate the first PV curve. Every change of parameter that would shift the MPP causes the device to calculate the PV anew.*
- *Voltage and current in the MPP are connected via factors FFi and FFu to the open circuit voltage (Uoc) and the short-circuit current (Isc), which are both given in this example, other than in Example 1. Depending on the selected technology, these factors are not adjustable*

Write day trend data (only possible before the function start)

Nr.	Command	Description	Register
18	**FUNC:PHOT:DAY:MOD␣WRIT**	Select access mode: write	12006
19	**FUNC:PHOT:DAY␣CLE**	Delete former data (should be executed every time before loading new data)	12007
20	**FUNC:PHOT:DAY:DAT␣1,␣500, ␣20,␣1500**	Write 1st day trend data set into index 1: Irradiation: 500 W/m² Temperature: 20°C Dwell time: 1500 ms	12010
	The dwell time is defined to have a minimum of 500 ms. However, when setting up the very first day trend data set it's expected to set 1000 ms or higher for this one, because else the function run might fail.		
21	**FUNC:PHOT:DAY:DAT␣2,␣800, ␣28,␣1500**	Write 2nd day trend data set into index 2: Irradiation: 800 W/m² Temperature: 28°C Dwell time: 1500 ms	12010
...	...	Write further data sets, a total of 500	...
519	**FUNC:PHOT:DAY:DAT␣500,␣ 1200,␣35,␣20000**	Write 500th day trend data set into index 500: Irradiation: 1200 W/m² Temperature: 35°C Dwell time: 20000 ms	12010

Control

Nr.	Command	Description	Register
520	**FUNC:PHOT:STAT␣RUN**	Start simulation -> the simulation will stop automatically after the time that results from the total of dwell times in all written data sets	12000

Analysis (after simulation end)

Nr.	Command	Description	Register
521	**FUNC:PHOT:REC:NUMB?**	Read number (n) of recorded data sets. This number isn't related to the number of day trend data sets in use. This feature records a new data set every 100 ms. Depending on the total simulation time, the record buffer could fill (max. 16 h record time) and overwrite existing data. It may become necessary to calculate the total simulation time from the day trend data sets and start reading the recorded data during simulation, then clearing the buffer and later read the rest of data.	12020
522	**FUNC:PHOT:REC:IND␣1**	Select first data set (index 1) for reading	12022
523	**FUNC:PHOT:REC:DAT?**	Read data from data set (index) 1	12024
...	**...**	Read further n-1 data sets:	...
x	**FUNC:PHOT:REC:IND␣n**	Select data set n (index n) for reading	12022
y	**FUNC:PHOT:REC:DAT?**	Read data from data set (index) n	12024

5.5.3.3 Example 3

- Technology: thin film
- Input mode: MPP values
- Simulation mode: Continuous, with adjustable MPP (voltage and current)
- Recording: deactivated

Configuration

Nr.	Command	Description	Register
1	**SYST:LOCK␣ON**	Activate remote control	402
2	**FUNC:PHOT:MOD␣UI**	Activate PV simulation mode **UI**	12001
3	**FUNC:PHOT:TECH␣THIN**	Select technology: **Thin film**	12016
4	**FUNC:PHOT:IMOD␣MPP**	Select input mode: **MPP**	12017
5	**FUNC:PHOT:STAN:MPP:VOLT␣45**	Set MPP voltage: 45 V	12050
6	**FUNC:PHOT:STAN:MPP:CURR␣10**	Set MPP current: 10 A	12051
7	**FUNC:PHOT:REC:ACT␣DIS**	Deactivate data recording	12018
8	**POW␣MAX**	Set global power set value to maximum	502
9	**VOLT 57**	Set the global voltage limit (should be ≥Uoc)	500

Control (also during simulation run)

Nr.	Command	Description	Register
10	**FUNC:PHOT:STAT␣RUN**	Start simulation	12000
11	**FUNC:PHOT:STAN:MPP:VOLT␣40**	Shift MPP: 40 V	12050
12	**FUNC:PHOT:STAN:MPP:CURR␣9**	Shift MPP: 9 A	12051
13	**FUNC:PHOT:STAT␣STOP**	Stop simulation after an arbitrary time	12000

5.5.3.4 Example 4

- Technology: cSi
- Input mode: MPP values
- Simulation mode: Day trend with shiftable MPP (voltage and current)
- Interpolation: activated
- Data recording: deactivated

Configuration

Nr.	Command	Description	Register
1	**SYST:LOCK␣ON**	Activate remote control	402
2	**FUNC:PHOT:MOD␣DAYUI**	Activate PV simulation mode **DAY UI**	12001
3	**FUNC:PHOT:TECH␣CSI**	Select technology: **cSi**	12016
4	**FUNC:PHOT:IMOD␣MPP**	Select input mode: **MPP**	12017
5	**FUNC:PHOT:STAN:MPP:VOLT␣36**	Set open circuit voltage: 36 V	12050
6	**FUNC:PHOT:STAN:MPP:CURR␣12**	Set short-circuit current: 12 A	12051
7	**FUNC:PHOT:REC:ACT␣DIS**	Deactivate data recording	12018
8	**FUNC:PHOT:DAY:INT␣ON**	Activate interpolation of day trend data	12005
9	**POW␣MAX**	Set global power set value to maximum	502
10	**VOLT 57**	Set the global voltage limit (should be ≥Uoc)	500

Load day trend data (only possible before the function start)

Nr.	Command	Description	Register
11	**FUNC:PHOT:DAY:MOD␣WRIT**	Select access mode: write	12006
12	**FUNC:PHOT:DAY␣CLE**	Delete former data (should be executed every time before loading new data)	12007
13	**FUNC:PHOT:DAY:DAT␣1,␣1,␣1, ␣300000**	Write 1st day trend data set into index 1: MPP voltage: 1 V MPP current: 1 A Dwell time: 300,000 milliseconds => 5 minutes	12010
14	**FUNC:PHOT:DAY:DAT␣2,␣2,␣2, ␣500**	Write 2nd day trend data set into index 2: MPP voltage: 2 V MPP current: 2 A	12010
...	**...**	Write further data set, a total of 1000	...
1012	**FUNC:PHOT:DAY:DAT␣1000,␣30, ␣9,␣500**	Write 1000th day trend data set into index 1000: MPP voltage: 30 V MPP current: 9 A	12010

Due to the dwell time of 5 minutes in the very first day trend data set, all 1000 data sets use the same dwell time, so the total simulation time results as 5000 minutes.

Control

Nr.	Command	Description	Register
1013	**FUNC:PHOT:STAT␣RUN**	Start simulation -> the simulation will stop automatically after the time that results from the total of dwell times in all written data sets	12000

5.5.4 Programming examples for MPP tracking

ELR9	ELR5	PS9	PSI9	PSI5	PSE	DT	PST	PSIT	EL3	PSB	PSBE	PS3	PS2	PS1	PSI1	PSB1	PSBE1	ELR1
✓	✓	–	–	–	–	✓(1	–	–	✓	✓	–	–	–	–	–	✓	–	✓

(1 not PSI 9000 DT

5.5.4.1 MPP2

For MPP tracking related information also refer to the user manual of your device. It explains how the different modes work and what the parameters are. Modes 1 to 3 don't require to load user data.

The parameters, as set in the configuration part, are invariable during runtime.

Configuration

Nr.	Command	Description	Register
1	**SYST:LOCK␣ON**	Activate remote control	402
2	**FUNC:GEN:MPP:IND␣0**	Index 0 is used to activate MPP mode selection	11000
3	**FUNC:GEN:MPP:DAT␣MPP2**	Select mode **MPP2** ("track"). This mode doesn't stop automatically.	11000
4	**FUNC:GEN:MPP:IND␣1**	Index 1 = Select to set the open circuit voltage U_{OC} of the solar panel to which the device is connected. This value also defines the voltage limit of the device.	11001
5	**FUNC:GEN:MPP:DAT␣50**	Set U_{OC} to 50 V.	11001
6	**FUNC:GEN:MPP:IND␣2**	Index 2 = Select to set the short-circuit current I_{SC} of the solar panel to which the device is connected. This value also defines the current limit of the device.	11002
7	**FUNC:GEN:MPP:DAT␣100**	Set I_{SC} to 100 A	11002
8	**FUNC:GEN:MPP:IND␣10**	Index 10 = Select to set the tracking interval Δt in milliseconds. This time elapses before the next tracking attempt.	11013
9	**FUNC:GEN:MPP:DAT␣3000**	Time = 3 s	11013
10	**FUNC:GEN:MPP:IND␣6**	Index 6 = Select to set ΔP, an offset to P_{MPP} where the device would start the next tracking attempt when this offset has been exceeded	11006
11	**FUNC:GEN:MPP:DAT␣30**	Set ΔP to 30 W (series with a low power rating have an adjustment range of 0-50 W [see the device's user manual for the actual range], other series have 0-P_{Nom})	11006

Control

Nr.	Command	Description	Register
12	**FUNC:GEN:MPP:STAT␣RUN**	Start the tracking -> the device will attempt to find the MPP and then track it until stopped, because this mode doesn't stop automatically. The time difference between two tracking attempts is defined by index 10, the max. deviation of the actual power from the MPP, before the tracking would continue, is defined via index 6. The last successful action to track the MPP stores three values U_{MPP}, I_{MPP} and P_{MPP} which can be read during runtime or later.	11010
13	**FUNC:GEN:MPP:STAT␣STOP**	Stop tracking anytime	11010

Analysis

Nr.	Command	Description	Register
14	**FUNC:GEN:MPP:IND␣7**	Index 7 = Set read mode for MPP data	11007
13	**FUNC:GEN:MPP:DAT?**	Read the MPP values U_{MPP}, I_{MPP} and P_{MPP}	11008 11009

5.5.4.2 MPP4

This mode is different to the others. It's available in remote control for all series, but not all of them support to use MPP4 on the control panel (HMI), so this mode isn't explained in these series' user manual. In case you have such a device and need more information, refer to the user manual of series EL 9000 B 3U.

With this mode, also called "user curve", the device runs through 1-100 arbitrarily definable points (voltage values) on an user defined curve, that could represent a PV curve of a solar panel. The goal is to collect measured data and to find the MPP amongst that data. For every processed curve point the device will present readable data in form of MPP values (U, I, P). The actual MPP, derived from all collected data, is also presented as a readable set of data.

In the example it shows how to configure and load 75 user defined points for MPP4 mode.

Configuration

Nr.	Command	Description	Register
1	**SYST:LOCK␣ON**	Activate remote control	402
2	**FUNC:GEN:MPP:IND␣0**	Index 0 is used to activate MPP mode selection	11000
3	**FUNC:GEN:MPP:DAT␣MPP4**	Select mode **MPP4** ("user curve"). This mode will stop automatically.	11000
4	**FUNC:GEN:MPP:IND␣8**	Index 1 = Activate user data input mode	11100 - 11174
5	**FUNC:GEN:MPP:LEV␣1**	Level 1 = 1st point of user curve	
6	**FUNC:GEN:MPP:DAT␣100**	Set 1st point to 100 V	
...		Set further, ideally subsequent points	
153	**FUNC:GEN:MPP:LEV␣75**	Level 75 = 75th point of user curve	
154	**FUNC:GEN:MPP:DAT␣80**	Set 75th point to 80 V	
155	**FUNC:GEN:MPP:IND␣12**	Index 12 = Select to define the range of points to run through in the test (here: end point). The end point can be any of 100 available points. Since the start point can't be higher than the end point, the end point is set first.	11015
156	**FUNC:GEN:MPP:DAT␣75**	End point = 75	11015
157	**FUNC:GEN:MPP:IND␣11**	Index 11 = Select to define the range of points to run through in the test (here: start point). The start point can be any of 100 available points, but must not be higher than the end point.	11014
158	**FUNC:GEN:MPP:DAT␣1**	Start point = 1	11014
159	**FUNC:GEN:MPP:IND␣10**	Index 10 = Select to set the tracking interval Δt, in milli-seconds. Defines the time to elapse before proceeding to the next point.	11013
160	**FUNC:GEN:MPP:DAT␣500**	Time = 0.5 s	11013
161	**FUNC:GEN:MPP:IND␣13**	Index 13 = Select to set the repetitions (0-65535) of the curve run. The result data, which can be read later, only holds the results of the last run.	11016
162	**FUNC:GEN:MPP:DAT␣0**	Repetitions = 0 (only one cycle)	11016

Any point that hasn't been loaded and that is within the defined range of points to run through is processed with 0 V.

Control

Nr.	Command	Description	Register
163	**FUNC:GEN:MPP:STAT␣RUN**	Start tracking -> the device will pick the first point of the defined range, set the voltage and measures current and power, stores all three and continues with the next etc. After all points and all cycles are through, the data is scanned for the point with the highest power, which is separately presented as MPP.	11010

Analysis

Nr.	Command	Description	Register
164	**FUNC:GEN:MPP:IND␣9**	Index 9 = Set mode to read the MPP4 measurings	11200 - 11274
165	**FUNC:GEN:MPP:LEV␣1**	Select 1st point to read from the list of measurings	
166	**FUNC:GEN:MPP:DAT?**	Read 1st point as U_{MPP}, I_{MPP} and P_{MPP}	
...		Continuously read further points	
313	**FUNC:GEN:MPP:LEV␣75**	Select 75th point to read from the list of measurings	
314	**FUNC:GEN:MPP:DAT?**	Read 75th point as U_{MPP}, I_{MPP} and P_{MPP}	
315	**FUNC:GEN:MPP:IND␣7**	Index 7 = Set read mode for MPP data	11007 11008 11009
316	**FUNC:GEN:MPP:DAT?**	Read the MPP values U_{MPP}, I_{MPP} and P_{MPP}	

5.5.5 Programming examples for EL 3000 B ramp generator

5.5.5.1 Example 1: Sawtooth

Let's say the target device is an EL 3200-25 B with 200 V and 25 A rating. The desired wave shall be a sawtooth with an offset of 1 A, an amplitude of 5 A, saw tooth duration of 100 ms (duty cycle) and pause of 200 ms.

Configuration

Nr.	Command	Description	Register
1	**SYST:LOCK␣ON**	Activate remote control	402
2	**FUNC:RAMP:SEL␣CURR**	Assign ramp generator to current	852
3	**FUNC:RAMP:IND␣0**	Index 0 is set by default after device start, but required for any next configuration, so it should be included. According to section *5.4.20*, index 0 is connected to level P1, which is considered as lower level, so here it's the pause after the saw tooth. The pause is defined as 1 A and 200 ms.	900
4	**FUNC:RAMP:OFFS␣4**	Sets the offset from the zero point, for the selected index. In this type of function generator, the levels of P1 and P2 are given in per cent of the ratings. The targeted 1 A are 4% of the rating of the example load model, so the parameter here is 4.	
5	**FUNC:RAMP:TIM␣100000**	The time that is connected to index 0 is t1. According to section *5.4.20*, this would be the rise time of the sawtooth, i. e. 100 ms. The time is given in microseconds, hence the 100,000.	902
6	**FUNC:RAMP:IND␣1**	Index 1 selects level P2, here the high at 5 A	901
7	**FUNC:RAMP:OFFS␣20**	5 A are 20% of the rating	
8	**FUNC:RAMP:TIM␣10**	Since the desired wave is a sawtooth, the dwell time (here: t2) on the peak shall be as short as possible, so minimum is set	904
9	**FUNC:RAMP:IND␣2**	Index 2 only selects a time value, here t3.	906
10	**FUNC:RAMP:TIM␣10**	t3 is the fall time, ideally also 0, but set to the shortest possible value	
11	**FUNC:RAMP:IND␣3**	Selects time t4	908
12	**FUNC:RAMP:TIM␣200000**	Time t4 is the pause time. Could be set 0 the minimum to achieve a continuous sawtooth without pause.	
13	**VOLT␣0**	Global set value of voltage. If not required to be at a specific minimum where the load would stop to sink current, set to 0.	500
14	**POW␣MAX**	Global set value of power, usually set to maximum, because else CP could interfere	502
15	optional: **VOLT:PROT␣MAX** etc.	Further global values, if required, like device protection thresholds etc.	various

Control

Nr.	Command	Description	Register
16	**FUNC:RAMP:STAT␣RUN**	Run the function. This will first switch the DC input on, if not on already, then start the function.	850
17	**FUNC:RAMP:STAT␣STOP** or **INP␣OFF**	Stop function run at any time. Both commands would stop and switch DC off	850 or 405
18	**FUNC:RAMP:SEL␣NONE**	Exit function generator mode	852

5.5.5.2 Example 2: 1 kHz rectangle on current with a duty cycle of 60%

This example also uses the current mode, because this is the natural mode an electronic load is working in, though it could also be run the same way in voltage mode, but with a different outcome.

The level of current is arbitrary, let's take 10 A for high and 0 A for low, the example model is EL 3080-60 B. A rectangle of 1 kHz uses 1000 repetitions per second, one cycle is 1 ms and the duty phase of 60% means 0.6 ms. So we need to program the 10 A high level for 0.6 ms and the 0 A low level for 0.4 ms. Since there is a rise time minimum of 10 µs, the resulting wave form is, strictly speaking, a trapezoid. If you want to consider that, the pulse and pause times each will reduce by 10 µs.

Configuration

Nr.	Command	Description	Register
1	**SYST:LOCK␣ON**	Activate remote control	402
2	**FUNC:RAMP:SEL␣CURR**	Assign ramp generator to current	852
3	**FUNC:RAMP:IND␣0**	Index 0 is set by default after device start, but required for any next configuration, so it should be included. According to section *5.4.20*, index 0 is connected to level P1, which is considered as lower level, here the pause of the cycle.	900
4	**FUNC:RAMP:OFFS␣0**	Sets the offset from the zero point, for the selected index. In this type of function generator, the levels of P1 and P2 are given in per cent.	
5	**FUNC:RAMP:390**	The time that is connected to index 0 is t1. According to section *5.4.20*, this would be the idle time of the rectangle on the lower level, i. e. 0.4 ms. The time is given in micro-seconds, hence the 390.	902
6	**FUNC:RAMP:IND␣1**	Index 1 selects level P2, here the high of 10 A	901
7	**FUNC:RAMP:OFFS␣16.66**	Sets P2 to 10 A, which is 1/6 or 16.66% of the rating	
8	**FUNC:RAMP:TIM␣10**	t2 is connected to the rise time to high level and shall be as short as possible, so we put the minimum	904
9	**FUNC:RAMP:IND␣2**	Index 2 only selects a time value, here t3.	906
10	**FUNC:RAMP:TIM␣590**	t3 is the dwell time on the high level, given as 0.6 ms above, hence 590 as value	
11	**FUNC:RAMP:IND␣3**	Selects time t4	908
12	**FUNC:RAMP:TIM␣10**	Time t4 is the fall time of the duty part. It shall also be as short as possible, so minimum	
13	**VOLT␣0**	Global set value of voltage, if not required to be at a specific level, set to 0	500
14	**POW␣MAX**	Global set value of power, usually set to maximum, because else CP could interfere	502
15	optional: **VOLT:PROT␣MAX** etc.	Further global values, if required, like device protection thresholds etc.	various

Control

Nr.	Command	Description	Register
16	**FUNC:RAMP:STAT␣RUN**	Run the function. This will first switch the DC input on, if not on already, then start the function.	850
17	**FUNC:RAMP:STAT␣STOP** or **INP␣OFF**	Stop function run at any time. Both commands would stop and switch DC off	850 or 405
18	**FUNC:RAMP:SEL␣NONE**	Exit function generator mode	852

6. Profibus & Profinet

6.1 General

Connection to the field buses Profibus and Profinet are only possible via the interface modules I**F-AB-PBUS** (Profibus) or **IF-AB-PNET** (Profinet, 1 or 2 ports) and thus limited to select series:

- EL 9000 B (HP, 2Q)
- ELR 9000 / ELR 9000 HP
- PSI 9000 2U - 24U
- PSE 9000 / PSB 9000
- all 10000s series

On the device side the interface module simplifies the necessary configuration to the absolute necessary. When using Profibus, the user only has to set a slave address (0...125), while Profinet's network settings are usually configured from remote, best by using the Siemens Primary Setup Tool (PST). Other, optional parameters like tags can be defined in the device's setup menu or via command.

This part of the document shall only teach how to use the so-called ModBus register lists (PDF) with your device in order to access indexes and slots. The list should come along with this document. The interface modules represent the device as a **DP-V1 slave** to the network, capable of cyclic and acyclic data transmission, whereas the acyclic one is primary.

6.2 Preparation

For the implementation of a device into a Profibus or Profinet and the enumeration at the master (PLC or similar), a fully configured and wired unit is presumed. The next thing you will usually need is a device description file called GSD (Generic Station Device) for Profibus or a GSDML for Profinet, which is either delivered with the device on the included USB stick or is available as download from the manufacturer's web site or can be obtained upon request.

This GSD/GSDML file enables to build a specific slot configuration for cyclic process data, such as actual values or status. Those slots are also used to access other data objects of the device via acyclic read/write. See more below.

The hardware configuration for a Profibus or Profinet network is originally meant for physical slots in which hardware extensions for the PLC are plugged and addressed. A power supply or electronic load is considered as peripheral hardware with several software slots. The slot model is used to disseminate the many remote control feature across several slots in order to have convenient access. The addressing works the same way as if there were physical hardware extensions plugged into the device, like a digital I/O port.

6.3 Slot configuration for Profibus

The slot configuration for users of the interface module **IF-AB-PBUS** is done by loading the GSD/GSE file into the hardware catalog, which is usually accessible in the HWCONFIG (Siemens STEP7). The slots can be configured as needed,which as required for slots 1-4, as they transport cyclic data (DP-V0). However, the slot configuration in the device requires to set up 8 slots. That number has no influence on acyclic access via DP-V1.

Overview of the slots and their assignment:

Slot	Slot name	Description
1	Device status	Cyclic Device status (for bit layout see register 505) + Acyclic slot 1
2	Actual voltage	Cyclic Actual voltage of DC input/output (for translation see *4.4*) + Acyclic slot 2
3	Actual. current	Cyclic Actual current of DC input/output (for translation see *4.4*) + Acyclic slot 3
4	Actual power	Cyclic Actual power of DC input/output (for translation see *4.4*) + Acyclic slot 4
5	Reserved slot 5	not used, but required to configure
...		
8	Reserved slot 8	not used, but required to configure

6.4 Slot configuration for Profinet

The GSDML (available on the included USB stick or as download) doesn't offer automatic slot configuration. When loading the file the correct version for the Profinet interface module in use, 1 port or 2 port, must be selected. After that, the slot placement can be set up like this which is only required for cyclic data:

Slot	Slot name	Description
1	Input 2 words	Cyclic device status (for bit layout see register 505)
2	Input 1 word	Cyclic actual voltage of the DC input/output (for translation see *4.4*)
3	Input 1 word	Cyclic actual current of the DC input/output (for translation see *4.4*)
4	Input 1 word	Cyclic actual power of the DC input/output (for translation see *4.4*)

For acyclic communication, the slots 5-12 are sort of directly accessed by using an "Index" value that calculates from the slot number and the ID value (required with Profibus), as the example in *„6.7.1. Activate/deactivate remote control“* shows. This Index, together with the slot 0 and subslot 1 suffices to address all Profinet supported objects from the register lists.

The register lists for 10000 series, specifically the issues which are connected to firmware KE 3.02, already contain an extra column for the Profinet index value

6.5 Cyclic communication via Profibus/Profinet

The Profibus / Profinet slave cyclically transfers process data to certain input addresses of the master, as defined by the user for Profibus or Profinet during slot configuration. Also see sections *„6.3. Slot configuration for Profibus“* or *„6.4. Slot configuration for Profinet“*.

Actual values coming from the device have to be translated to real values according to the formula described in section *„4.4. Translating set values and actual values“*, while any other data are referenced in those so-called register lists which usually should come along with this document. The slot names are partially connected to corresponding registers in the lists. For instance, one slot is named “Actual current”. The same name can be found in the register list at position 508. This is also where the register is enabled for use with Profibus/Profinet by having a slot/index number assigned. The same principle applies to registers.

According to sections *6.3* and *6.4* there are up to 12 slots for acyclic device access, which carry a varying number of indexes (see register lists). By using appropriate function blocks, such as SFB52 and SFB53, the user can acyclically access the IDs (slot addresses) and indexes by write and read. The slots in the hardware configuration for acyclic transfer are only defined to reserve memory space, so it doesn't matter that they are only inputs.

Set values, settable status and most other registers are not transferred cyclically for several reasons. One is the high number of available registers which can't be covered by only 16 available slots and the max. data size per slot.

6.6 Acyclic communication via Profibus/Profinet

Acyclic communication with the target device is done by using **slot numbers 1-12**, precisely their resulting ID, and **indexes**, which are accessed by system function blocks or functions for read or write. When using the Siemens software STEP7, the SFBs to use here are usually SFB52 and SFB53. In TIA Portal there are acyclic WRREC and RDREC. Other PLC control softwares offer similar options.

The acyclic SFBs/functions require an ID, an index and a parameter as input. The parameter can be a status or a set value, translated to a hexadecimal value according to *„4.4. Translating set values and actual values“*.

The register list for your device series has two extra columns for Profibus/Profinet use only. These define slot and index number for a particular command. The necessary parameter is defined in the register lists, also in *„4.4. Translating set values and actual values“*. Rule of thumb:

- **Registers where no slot/index is given are not supported via Profibus and Profinet**

The general procedure to control a device remotely is like this:

1. **Activate remote control** with the appropriate command (may be denied by the device, see *„3.2. Control locations“*)
2. Control and monitor your device remotely, via cyclic (DP-V0) and/or acyclic (DP-V1) access.
3. Deactivate, i.e. leave remote control

If you just want to record data by reading values from the device, activation of remote control isn't necessary. You can send query commands to the device at anytime and the device will respond immediately, if its current situation allows to respond at all. After querying something from the device, the function block will put out the data returned from the device to an output buffer for further processing.

The field bus ensures that the command is transmitted to the device, otherwise it will generate an error. However, it can't verify that the device really accepted the command or already has set the desired value. This can only be verified by reading the value from the device and comparing. Whether a value has been truly transferred to the device's DC input/output can't be determined definitely.

6.7 Examples for acyclic access

These examples refer to Siemens' automation software STEP7. For acyclic access (DP-v1) there were function blocks (SFB52, SFB53) used in older versions of this software and in newer versions like TIA Portal there are now functions called **RDREC** (read record) and **WRREC** (write record) which do the same and which still have the same input parameters ID, INDEX and MLEN. The three have to be determined, whereas the ID always remains the same for a particular device.

6.7.1 Activate/deactivate remote control

Remote control is a device state and not the default one. It has to be activated, i.e. requested by the controlling unit from the device before it can be controlled remotely. Depending on the settings and on the state the device is currently in when trying to switch to remote control, the device may deny the request.

► How to activate or deactivate remote control of your device via Profibus or Profinet

1. Use the register list and find the proper command, here: Register 402 - Remote mode.
2. Find the slot and index values for this register in the dedicated columns, for this example it's slot **2** and index 1. In case Profinet is used and there is already an extra column for the Profinet index in your register list (these register lists are update from time to time), read the value from there or calculate (see step 4).
3. Profibus: For older CPUs like the series 300 read the I/Q address for slot 2 from the slot configuration of the device to have the value for parameter "ID". This would by default be set to 260 by the software. Profinet: For newer CPUs like the 1200s, which by default only support Profinet, the ID is equal to the "Hw_IO" value of slot 2 from the system constants.
4. The value "index" from the register list is submitted to the parameter INDEX like this:

   Profibus: **INDEX** = index = **1**

   ID = as read, e. g. 260 or DW#16#104

   MLEN = 2 (equals to one ModBus register)

   Profinet: **INDEX** (if calculated) = slot from register list* 255 + 1 + index from register list = **512 (0x200)**

   ID = as read, e. g. 260 or DW#16#104, or as read from "Hw_IO"

   MLEN = 2 (length in bytes, as read from the register list for address 402)
5. Use a suitable function block in your automation software, like SFB53 / DB53, or function WRREC.
6. Define the control value to use for this command, as described in the columns "Data" and "Example":

   0xFF00 = Activate remote control

   0x0000 = Deactivate remote control
7. Feed the control value to the function block SFB53 or function WRREC into **REQ**, along with the other three. If not somehow inhibited by the device, it should either switch to remote control or back to manual control.

6.7.2 Send a set value

Any command that sets something in the device, no matter if value or status, requires activated remote control status. Also see *„6.7.1. Activate/deactivate remote control“* and *„3.2. Control locations“*.

Before you send a value, you first need to select which one you want to set and you also might need to translate it, because via Profibus/Profinet set values are transferred as per cent of the nominal values. Read sections *„4.3. Format of set values and resolution“* and *„4.4. Translating set values and actual values“* for more information.

► How to set the DC input/output current value

1. Use the register list and find the proper command, here: Register 501 - Set current value.
2. Find the slot and index values for this register in the dedicated columns of the register list, for this example it's slot **2** and index 24. In case Profinet is used and there is already an extra column for the Profinet index in your register list (these register lists are update from time to time), read the value from there or calculate (see step 4).
3. Profibus: For older CPUs like the series 300 read the I/Q address for slot 2 from the slot configuration of the device to have the value for parameter "ID". This would by default be set to 260 by the software. Profinet: For newer CPUs like the 1200s, which by default only support Profinet, the ID is equal to the "Hw_IO" value of slot 2 from the system constants.
4. The value "index" from the register list is submitted to the parameter INDEX like this:

   Profibus: **INDEX** = index = **1**

   ID = as read, e. g. 260 or DW#16#104

   MLEN = 2 (equals to one ModBus register)

   Profinet: **INDEX** (if calculated) = slot from register list* 255 + 1 + index from register list = **535 (0x217)**

   ID = as read, e. g. 260 or DW#16#104, or as read from "Hw_IO"

   MLEN = 2 (length in bytes, as read from the register list for address 402)
5. Use a suitable function block in your automation software, like SFB53 / DB53, or function WRREC.
6. Define the control value to use for this command, as described in the columns “Data” and “Example”. First, read the value range: 0x0000...0xCCCC (decimal: 52428) = Current 0...100%. Second, calculate the set value.

   For a model with, for example, 170 A nominal current and a desired current of 10 A, this would be 52428/17 = 3084 --> 0x0C0C.
7. Put the control value 0x0C0C together with ID and INDEX into input **REQ** of the function block SFB53 or function WRREC and execute it. The device should instantly set 10 A as current limit. This can be verified in the display of the device where it shows the set value of current.

6.7.3 Read something

Reading something from the device is always possible, it means that no remote control is required. Apart from the cyclically transferred data, any other available information can be read via acyclic transfer.

► How to read the actual values of voltage and current

1. Use the register list and find the proper register. The registers of voltage and current are next to each other, the one of voltage is the lower number, thus it will be: Register 507 - Actual voltage
2. Determine the values for ID, INDEX and MLEN as shown in the above examples.
3. Read the length of bytes from the column “Data length in bytes” to determine how many bytes to read. In this case there are two registers with length 2 bytes to read, so it's 4 bytes.
4. Configure block SFB52 or function RDREC with ID, INDEX and data length (4 bytes or 2 words of 16 bit, depending in the way the software defines the input).
5. Execute the function block. The data buffer of the block should return the requested data in form of 4 bytes.

The returned 4 bytes will contain the actual voltage value in the first two bytes which is represented as per cent value (for translation see *„4.4. Translating set values and actual values“*). The actual current value will be in the last two bytes. By varying the data length to 6 you could also include the actual power value. Alternatively, you can query each actual value separately. To do this, you need to use the corresponding register number to calculate the INDEX and a data length of 2.

6.8 Data interpretation

Data returned from queries, but cyclically transferred data in the first place, have to be interpreted. Let's use an example from a Profibus master simulator where the cyclic data is comfortably displayed. Also see section *„4.4. Translating set values and actual values“.*

Eingangsdaten

		76543210		
1:	00	00000000	.	0
2:	00	00000000	.	0
3:	04	00000100	.	4
4:	C0	11000000	.	192
5:	26	00100110		38
6:	3A	00111010	:	58
7:	0C	00001100	.	12
8:	9B	10011011	.	155
9:	09	00001001	.	9
10:	25	00100101	%	37
11:	00	00000000	.	0
12:	00	00000000	.	0
13:	00	00000000	.	0
14:	00	00000000	.	0
15:	00	00000000	.	0
16:	00	00000000	.	0
17:	00	00000000	.	0
18:	00	00000000	.	0

The figure shows the transferred data of a configuration with 8 slots. Because only slots 1-4 are used for cyclic transfer, the rest remains empty.

Slot 1: Device status (connected to register 505). The exemplary value 0x000004C0 tells that bits 6, 7 and 10 are set, meaning the device is configured as master (for master-slave), the input/output is on and regulation mode is CC.

Slot 2: Actual voltage (connected to register 507). With a 250 V model, for instance, the value 0x263A translates to 250 V*0x263A/52428=46.7 V.

Slot 3: Actual current (connected to register 508). With a 510 A model, for instance, the value 0x0C9B translates to 510 A*0xC9B/52428=31.4 A.

Slot 4: Actual power (connected to register 509). For a 5 kW power supply, for instance, the value 0x0925 translates to 5000 W*0x925/52428=223 W or 0.22 kW.

Slot 5: not used for cyclic data

Slot 6: not used for cyclic data

Slot 7: not used for cyclic data

Slot 8: not used for cyclic data

For users of a PSB 9000 or PSB 10000 device: like represented on the device's display, actual values of current or power can be negative, depending on the operation mode. The definition of those registers holding the actual value doesn't support negative values, but the "Device status" register 505 (cyclic or acyclic readable) indicates the operation mode via bit 12, i. e. source or sink mode. The bit can be used to invert the actual values of current and/or power for sink mode and further processing.

7. CANopen

The available communication objects (ADIs) in an Electronic Data Sheet file (EDS/XDD), which is delivered with your device on a USB stick or available as download from the manufacturer's website. This EDS can be integrated in CANopen related software. The EDS indexes are not separately explained, because their definition and use is identical to herein described ModBus protocol and the related, external register list files (see *„4.7. About the register lists“*). Examples from the ModBus part of this document can be used and applied for CANopen as well, but would be reduced to the core data, because CANopen user are not confronted with checksums and function codes as with ModBus.

EtherCAT also uses the CANopen data transfer protocol, so this section is also valid for EtherCAT users when remotely controlling the device via SDO access. The difference between EtherCAT systems and CANopen software is the fact that you don't need to load an EDS/XDD or even can't. With EtherCAT, the object list or index list is downloaded from the device into the IDE.

The CANopen module IF-AB-CANO doesn't feature an internal termination resistor. Thus the bus termination has to be applied by the user according to the CAN bus requirements.

7.1 Restrictions

- Internally, the device handles everything based on ModBus with a register set that starts at address 0. With CANopen, the manufacturer specific object range starts at 0x2001 and thus the ModBus register addresses are shifted for CANopen by the value 0x2001, but maintain their order as listed in the register lists. With 0x5FFF being the highest addressable object when using CANopen, it corresponds to ModBus register 16383. It means, with CANopen it's not possible to use all the features of a device, specifically those beyond that register number.
- No PDO mapping possible
- No heartbeat, no guarding

7.2 Preparation (CANopen only)

For the communication with the device via CANopen interface **IF-AB-CANO**, a few things are required:

1. A suitable CAN cable, preferably with switchable termination resistor, which has to be activated always if the device is at the end of the bus, like when directly connecting the PC to a single ELR 9000 unit.
2. EDS/XDD (included with the device on USB stick).
3. CANopen software for the PC (not included, any available software for CANopen should suffice).
4. Documentation about how to use the supported indexes. See sections *1. - 4.*, *7.2* and *9.*, as well as the included register list(s).

7.3 User objects (indexes)

The message format used via CANopen communication is related to ModBus. A specific index is connected to a specific ModBus register. The CANopen standard defines that user objects are enumerated from index 2001, which a hexadecimal number without the usual prefix 0x. With ModBus, the registers are counted from 0. It means, that index 2001 corresponds to register 0 or index 21F5 corresponds to register 500 etc.

The EDS/XDD contains less indexes than the device supports as ModBus registers, but the available indexes still cover the most functions of the device. Users can edit the EDS/XDD anytime and add further indexes.

Along with this document there usually are so-called register lists for primary ModBus use, but these can also be used for CANopen, as they also define data type and value range of the indexes. Control examples in other sections of this documents can be applied for CANopen as well.

7.3.1 Translation ADI -> register

The translation of an CANopen index, as listed in the EDS file, to a register address is quite easy due to the fixed offset 0x2001. For example, if you pick the index “207A Nominal voltage” from the EDS, it translates like this:

Index number - Offset = register address --> 0x207A - 0x2001 = 0x79 (hex) = 121 (dez). According to the register list for an ELR 9000 device, this represents the nominal device voltage as a FLOAT value. Because CANopen doesn't support the data type FLOAT, the EDS uses REAL32 here. The user just has to translate the 32 bit value according to IEEE 754 specification.

7.4 Specific examples

7.4.1.1 Switching to remote control

As described in *„4.8.7.5. Switch to remote control or back to manual control“*, it's required to switch the device to remote control before you can control it. In order to do this, you first need to find the proper command, i.e. register in the register list or the dedicated index in the EDS. In this case, it's register 402 or index 0x2193. The register list defines that the value 0xFF00 has to be sent to switch to remote or value 0x0000 to leave remote control.

7.4.1.2 Setting a set value

After remote control has been accepted by the device, you are allowed to send set values. Those values usually represent a per cent value of the corresponding rated value. From the definition in the register list, 100% of a value translate to the hexadecimal value 0xCCCC and 0% to 0x0000. It means, there are 52429 possible values between 0% and 100%. It has to be pointed out here, that this isn't the true resolution values like voltage or current actually achieve at the DC input/output. The effective resolution of output/input values is 26214 steps. An example for set value translation is in *„4.8.7.1. Writing a set value“.*

7.5 Differences to ModBus

Value definitions and objects addressing via CANopen is derived from ModBus and reduced to what is essentially required.

7.5.1 When using the arbitrary generator

Due to CANopen only being able to transport a maximum of 4 effective user data bytes per message, the 8 values of data defining a sequence point of the arbitrary generator can't be transferred at once, but in 8 separate messages. Upon reception of the 8th message, the device checks the entire sequence point for plausibility, but once all sequence points are set without any error **it requires to send an additional submit command (index 235F)**. This will transfer all sequence point data and load the function into the function generator and enable start/stop action. Without sending that command the function generator would either run with all data being zero or using old data.

The steps to perform for CANopen are the same as in the example in section *4.11.8.1* which is for direct ModBus communication when using a different interface:

Step 1:

Select, whether to apply the function to the voltage U (index 2354) or the current I (index 2355). Before you haven’t made this selection, the device can not accept sequence point data, because the data is run through a plausibility check against the device’s nominal values.

Step 2:

Define start sequence point (index 235C), end sequence point (index 235D) and number of cycles of that sequence point block to repeat (index 861).

Step 3:

Load data for all required sequence points (x out of 99, indexes 2385 - 29A5, 8 values per sequence point in sub indexes).

Step 3.1:

Submit the data by writing 0xFF00 to index 235F (register 862).

Step 4:

Set the global voltage limit (index 21F5), if the function is applied to the current. Otherwise, set the global current limit (index 21F6), if the function is applied to voltage. Set the global power limit (index 21F7) for both modes.

Step 5:

Control the function generator with start/stop (index 2353).

Step 6:

When finished, leave the function generator by deselecting your former selection of either U (index 2354) or I (index 2355) again by writing 0x0000.

7.6 Error codes

Following error codes, as part of the CANopen standard, are supported by the CANopen interface module:

Code	Description
0x06020000	Object doesn't exist in the object dictionary (ModBus register list)
0x06040043	Command not supported
0x06099911	Sub-Index doesn't exist
0x06010002	Attempt to write a read only object
0x06010002	Attempt to read a write only object
0x06070012	Too much data
0x06070013	Not enough data
0x06090030	Value range of parameter exceeded
0x08000022	Data could not be transferred or stored to the application because of the present device state
0x05040005	Out of memory
0x08000000	General error

8. CAN

This section is solely dedicated to the communication with a device via the CAN interface IF-AB-CAN. Configuration of the interface itself is done on the control panel (HMI) of the device and described in the device manual.

8.1 Preparation

What is required for communication with the device via CAN module **IF-AB-CAN**?

1. A suitable CAN cable. It's not required to have one with integrated bus termination switch and resistor, because the interface module has an electronically switched resistor for bus termination. In case the cable also has one, it's important to take care to activate only one of both, else there can be bus errors.
2. When using Vector™ or similar software which can make use of so-called database files (DBC), a dedicated DBC for the particular device model. If not available, it can be requested from the manufacturer or created by the user, for example by modifying a similar one.
3. CAN software for the PC (not included, any available software for CAN should suffice).
4. Documentation about how to use the supported CAN objects. See below and sections *1. - 4.*, as well as the included register list(s).

8.2 Introduction

The data format is derived from the previously in this document described ModBus RTU. In relation to a database file (DBC) a **mux value** (Vector terminology) represents a specific **ModBus register** or object/command. Objects in the database are thus selected by the muxer and when programming the CAN message buffer directly (CAPL), the first two bytes of data in a CAN message define the register (object, command) to access. The selection between writing and reading objects is done by the CAN ID.

Each device will be assigned at least three CAN IDs, which are defined via the so-called Base ID in the device's CAN settings. The Base ID is used write to objects (message type: **Send_Object**), while querying objects (message type: **Query_Object**) is done with Base ID+1 and responses (message type: **Read_Object**) coming from the device use Base ID+2. Responses from the device are expected after a query, but can also be received unexpectedly in case of communication or access error. When adjusting the Base ID of a device, the other related IDs will shift automatically.

There is another adjustable ID, the Broadcast ID. It's separate from all others and can be used to address multiple devices at once by one command when using the same broadcast ID on these device. This ID is for write access (Send_Object) only. Queries to multiple devices at once with one message are not possible.

Apart from the Base ID and Broadcast ID for acyclic access, some series support further adjustable IDs for cyclic status data which is sent permanently by the device once activated and after the CAN connection has been established. Refer to the device manual for CAN setup details, particularly to the section for the communication settings,.

8.3 Message formats

8.3.1 Normal sending (writing)

Writing to the device is always done via the base ID or the broadcast ID. It requires to set the first register or object to write data to, as well as the number of registers to write and a specific number of parameter bytes which can represent different data types.

Connected ModBus functions: Write Single Coil (WSC), Write Single Register (WSR)

Access via: Base ID, broadcast ID

Bytes 0+1	Byte 2	Bytes 3+4
Register	**Nr. of regs to write**	**Data**
0...65534	Always 1	Value (16 bit)

Connected ModBus function: Write Multiple Registers (WMR)

Access via: Base ID, broadcast ID

Bytes 0+1	Byte 2	Byte 3	Bytes 4-7
Start reg.	**Nr. of regs to write**	**Marker**	**Data bytes**
0...65534	2...123	0xFF, 0xFE...	Four bytes or two 16 bit values or one 32 bit value

Start register: always the register number from the register list, i. e. start register for a command.

Nr. of regs to write: refer to the register list. An object defined with 40 bytes occupies 20 registers, so when writing to such an object the value here would have to be 20.

Marker: used to distinguish single messages from split messages, which become necessary with CAN due to the short number of bytes per message, and also used to define the correct sequence of data. For example, a string like the user text can be up to 40 characters and when writing it has to be split across multiple messages. Every message can transport 4 characters of the string. The marker always starts with 0xFF and is counted down (0xFF, 0xFE...) with every next split message belonging to a transmission. The marker is required, because on CAN bus it's not guaranteed that messages are received in the same order they were sent.

Data bytes: the number of bytes in this type of message is always 4, no matter if all bytes are filled with information from the actual data to transmit or are 0. An example: a user text with a length of 15 characters would require to send 4 messages. The object for the user text is defined to have 20 registers, means 10 messages. Since you would write to less registers than defined you would only have to reduce the number of **Nr. of regs to write**. In this example it would be 8, resulting in 4 messages containing 16 bytes (15 bytes of string + termination character).

8.3.2 Cyclic sending (writing)

Cyclic sending (or writing) is an additional way which allows for compact and time efficient transmission of often used set values and status in form of **grouped data**. Cyclic sending uses extra CAN IDs. How "cyclic" the data is transmitted is determined by the controlling side, which defines the interval via the global message timing. We still recommend to stick to the timing recommendations as described in section *3.3.3*.

8.3.2.1 Group part "Control"

Access via: Base ID Cyclic Send

Bytes 0-1
Control word

Control word definition:

Bit	Name	Related register	Meaning
8	Remote control	402	Activates remote control of the device with 1 or deactivates it with 0
9	Eingang/Ausgang	405	Switches the DC input/output of the device on with 1 or off with 0
10	UIP / UIR	409	Activates resistance control mode (UIR, where featured) with 1, while with 0 mode UIP will be active
11	Spannungsregler	422	Only available with electronic loads of the 9000 series (EL/ELR): switches the speed of the internal voltage controller between „fast“ (1) and „slow“ (0). Note: cannot be used to select the voltage controller speed with the 10000s series, as they use a different register.
12	Alarme	411	A 1 acknowledges all currently acknowledgeable alarms

This control word requires special attention, as the 5 bits can trigger several actions at once which don't have a certain priority of processing. It means, if you would try to activate remote control together with switching on the DC input/output (bits 0 and 1 both TRUE), you may receive a settings conflict error, because the device would possibly process bit 9 before bit 8.

8.3.2.2 Group part "Set values 1"

Access via: Base ID Cyclic Send + 1

Bytes 0-1	Bytes 2-3	Bytes 4-5	Bytes 6-7
Register 500	**Register 501**	**Register 502**	**Register 503**
Set value of voltage	Set value of current	Set value of power	Set value of resistance

With the PSB series, these four set values belong to the "source mode", listed as "Set values [PS]" on the HMI under "Base ID Cyclic Send". This block part is also valid for PSBE series, but without the set value of resistance, which isn't used in PSBE series.

8.3.2.3 Group part "Set values 2" (only with PSNB/PSBE series)

Access via: Base ID Cyclic Send + 2

Bytes 0-1	Bytes 2-3	Bytes 4-5
Register 499	**Register 498**	**Register 504**
Set value of current (EL)	Set value of power (EL)	Set value of resistance (EL)

With the PSB series, these three set values belong to the "sink mode", listed as "Set values [EL]" on the HMI under "Base ID Cyclic Send". This block part is also valid for PSBE series, but without the set value of resistance, which isn't used in PSBE series.

8.3.3 Querying

Querying an object is the first part of a read action. It's always done via Base ID + 1. The device should then respond via Base ID + 2 (Read_Object) and with the expected data. Only after reading the response, the read action is finished. In order to query an object via the Query ID (Base ID +1) it's sufficient to send the start register number. The device will respond with the correct length of data, but in different. See below at *8.3.4*.

Connected ModBus functions: Read Coils (RC), Read Holding Registers (RHR)

Access via: Base ID + 1

Bytes 0+1
Start reg.
0...65534

8.3.4 Normal reading

Data coming from the device can be a single message (expected data or error) or can be split messages forming a response. The information is either in a buffer or, when using software from Vector company, automatically sorted into signals. The data of split messages has to be combined again and according to the marker. Even the Vector database can't do this automatically. But there are only a few objects like the user text which require this treatment and these are usually not accessed very often.

Incoming from the device via: Base ID + 2

Response as one message (number of queried registers 1-3):

Bytes 0+1	Bytes 2-7
Register	**Data**
0...65534	1-3 registers

Response as multiple messages (number of queried registers >3):

Bytes 0+1	Byte 2	Bytes 3-7
Register	**Marker**	**Data**
0...65534	0xFF, 0xFE...	5 bytes

Byte 2 can't be used to determine whether the message is part of a split response, as single registers can also return 0xFF etc.

Response as error message:

Bytes 0+1	Byte 2
65535	Error code

The error codes used here are partially the same as with ModBus, partially CAN specific. See *„8.3.6. Communication error codes“*.

8.3.5 Cyclic reading

The cyclic reading is an additional feature where the device can automatically send specific objects to user-definable IDs in an user-definable interval. Message coming in from cyclic reading are different from those of normal "acyclic" read actions. In order to activate and use cyclic reading, the user has to:

1. define the separate "Base ID Cyclic Read" on the device (HMI, CAN settings) or via digital interface.
2. define which of the 5 available objects for cyclic reading are going to be used and activate them by setting the interval time to a value other than zero.
3. process the received data separately, because the data format is different here (see below).

The interval times for the cyclic objects can be set separately from each other. In case the time settings match or overlap, the device will send the corresponding messages subsequently and as fast as possible.

The minimum interval is 20 ms. When using a very low CAN bus speed, for example 10-50 kbps, CAN bus errors may occur when multiple cyclic reading items are active, because of too much traffic.

Once cyclic reading is activated by setting the interval time of at least one item and as soon as a CAN connection is established, the device will start to automatically and permanently send messages to the defined IDs. The cyclic reading feature can be turned off or on anytime using the CAN settings on the HMI or the corresponding commands being sent as acyclic CAN messages.

There are up to 6 CAN IDs reserved for cyclic read. Starting at the adjustable "Base ID Cyclic Read" (see HMI of the device) the data in the messages is defined as follows.

8.3.5.1 Message "Status"

Incoming from the device via: Base ID Cyclic Read

Bytes 0-3
Device status (32 Bit)

Bit layout of the device status value:

Bit	Name	Meaning
31	Remote control	1 = on
30	Input / output	1 = on (req., register 405)
29	Volt. reg. speed	1 = fast (register 422)
28	Operation mode	0 = UIR, 1 = UIP
27	Alarms	1 = at least 1 alarm active
26	Alarm MSS	1 = alarm active
25	Alarm OCD	1 = alarm active
24	Alarm OCP	1 = alarm active
23	Interface in access	register 505, bits 4-0
22		
21		
20		
19		
18	Alarm OPD	1 = alarm active
17	Alarm OPP	1 = alarm active
16	Alarm OT	1 = alarm active

Bit	Name	Meaning
15	-	
14	Alarm OVD	1 = alarm active
13	Alarm OVP	1 = alarm active
12	Alarm PF	1 = alarm active
11		
10		
9	REM-SB	1 = on (register 505, bit 30)
8	Alarm UCD	1 = alarm active
7	Alarm UVD	1 = alarm active
6	Remote sensing	1 = external, 0 = internal
5	Function gen.	1 = FG active
4	MS type	1 = master, 0 = slave
3	Input / output	1 = on (register 505, bit 7)
2	Reg. mode	register 505, bits 10-9
1		
0	PSB mode	0 = source, 1 = sink

8.3.5.2 Message "Actual values

Incoming from the device via: Base ID Cyclic Read + 1

Bytes 0-1	Bytes 2-3	Bytes 4-5
Register 507	**Register 508**	**Register 509**
Actual voltage	Actual current	Actual power

PSB and PSBE series only: these actual values are unsigned. In order to interpret them as negative values during sink mode operation, bit 0 of block "Status" has to be used.

8.3.5.3 Message "Set values 1"

Incoming from the device via: Base ID Cyclic Read + 2

Bytes 0-1	Bytes 2-3	Bytes 4-5	Bytes 6-7
Register 500	**Register 501**	**Register 502**	**Register 503**
Set value of voltage	Set value of current	Set value of power	Set value of resistance

With the PSB series, these four set values belong to source mode operation, listed as "Set values [PS]" on the HMI under "Base ID Cyclic Read". This message is also available with PSBE series devices, but without the set value of resistance.

8.3.5.4 Message "Limits 1"

Incoming from the device via: Base ID Cyclic Read + 3 ("Limits 1" or "Limits 1 [PS]")

Bytes 0-1	Bytes 2-3	Bytes 4-5	Bytes 6-7
Register 9002	**Register 9003**	**Register 9000**	**Register 9001**
I-max	I-min	U-max	U-min

With the PSB and PSBE series, these adjustment limits only belong to source mode operation, listed as "Limits 1 [PS]" on the HMI under "Base ID Cyclic Read".

8.3.5.5 Message "Limits 2"

Incoming from the device via: Base ID Cyclic Read + 4 ("Limits 2" or "Limits 2 [PS]")

Bytes 0-1	Bytes 2-3
Register 9004	**Register 9006**
P-max	R-max

With the PSB and PSBE series, these adjustment limits only belong to source mode operation, listed as "Limits 2 [PS]" on the HMI under "Base ID Cyclic Read". With series PSBE it's without "R-max".

8.3.5.6 Message "Set values [EL]"

Only available with bidirectional devices from series PSB or PSBE (here without "Set value of resistance [EL]").

Incoming from the device via: Base ID Cyclic Read + 5

Bytes 0-1	Bytes 2-3	Bytes 4-5
Register 499	**Register 498**	**Register 504**
Set value of current (EL)	Set value of power (EL)	Set value of resistance (EL)

8.3.5.7 Message "Limits [EL]"

Only available with bidirectional devices from series PSB or PSBE (here without "R-max").

Incoming from the device via: Base ID Cyclic Read + 6

Bytes 0-1	Bytes 2-3	Bytes 4-5	Bytes 6-7
Register 9008	**Register 9009**	**Register 9005**	**Register 9007**
I-max	I-min	P-max	R-max

8.3.6 Communication error codes

The error codes returned in a CAN message block are partially the same as those from ModBus communication, but since the CAN module, being a gateway, has its own firmware it CAN specific error codes. For the format of a CAN error message see *„8.3.4. Normal reading“*.

Code	Description
0x02	Invalid register address. Means, the register address given in the CAN message is not specified for the addressed device. See series specific register list.
0x03	Wrong message or payload length. Depending on the addressed register, a payload of two or more bytes is required. This error would come if the DLC of a CAN message is 5 while it should be 6 or more.
0x04	Execution error. This is a general error caused by a conflict between a correct command and the device's situation. Example: it would be caused when trying to change the mode of the function generator (where featured) while it's already active and running.
0x07	Access denied. An attempt was done to write to a register that is defined as "read only" or vice versa.
0x17	Device in local. Can only occur when trying to enter remote control by a correct command while the remote control is block by "Local" mode being activated for the device. This is actually the same situation as with error 0x04, it's only more specific.
0x20	Overload. Can occur when too many message arrive in the module, so the messages boxes run full. The solution would usually be to reduce the amount of traffic or to increase the time between subsequent messages to the same CAN ID.

8.3.7 Examples

8.3.7.1 Switching to remote control

As described in *„4.8.7.5. Switch to remote control or back to manual control“*, it's required to switch the device to remote control before you can control it. In order to do this, you first need to find the proper command, i.e. register in the register list or the dedicated index in the EDS. In this case, it's register 402 (hex: 0x192). The register list defines that the value 0xFF00 has to be sent to switch to remote or value 0x0000 to leave remote control.

Assuming the device has been set to Base ID 0x20, the data to be sent according to *8.3.1* would be:

0x01	0x92	0x01	0xFF	0x00
Register / object		Nr. of regs	Bit (coil) for TRUE	

The device should switch to remote control immediately, if not inhibited somehow. The status of remote control can be read from the display or by reading status register 505.

8.3.7.2 Write and read back a set value

After remote control has been accepted by the device, you may start to send set values. Those values usually represent a per cent value of a rated value. From the definition in the register list, the hexadecimal value 0xCCCC translates to 100% and 0x0000 to 0%. It means, there are 52429 possible values between 0% and 100%. It has to be pointed out here, that this isn't the actual resolution of a voltage or current value at the DC input/output. The effective resolution is 26214 steps. An example for set value translation is in *„4.8.7.1. Writing a set value“.*

Message example: power supply model PSI 9080-170 3U has a rated current of 170 A. If you wanted to set it to 35 A, the set value would calculate as 35 A * 52428 / 170 A = 10794 = 0x2A2A, according to the formula in *4.4*. The current is set with register 501. Assuming the device would have been set to base ID **0x88** the data to send to this ID would have to be, according to *8.3.1*:

0x01	0xF5	0x01	0x2A	0x2A
Register / object		Nr. of regs	Set value current	

Soon after the device received and accepted the value, it's set and could be read from the display or also by reading it back using the same object. Given the same base ID, the query message would be

0x01	0xF5
Register / object	

and would have to be sent to the query ID of the device, here **0x89**. Short after this, the device should respond the requested value on the read ID **0x8A**:

0x01	0xF5	0x2A	0x2A
Register / object		Set value current	

In case the value hasn't been accepted, like when the adjustment limit for current (I-max) would be set to 30 A, the device may also return an error message instead:

0xFF	0xFF	0x03
Error		Error code

The ModBus error code 0x3 tells "wrong data". Also see *4.10.* In this case, the set value was too high.

9. EtherCAT

9.1 Preamble

Those device series supporting the Anybus interface modules (see *„2.2. Anybus module support“*) also support the EtherCAT module IF-AB-ECT. For older devices it may require to install a firmware update.

Per definition, the EtherCAT data communication is based on CANopen objects transferred via an Ethernet network connection. This is called "CANopen over Ethernet (CoE)". All documentation for EtherCAT and CANopen is provided by the Beckhoff company or the CiA organisation.

9.2 Restrictions

- The scan for devices can't detect a bidirectional device as such from the ESI, except the ESI has been modified before (more see below)
- No hot-plug support; devices coming up while the network is running must be switch to "OP" mode separately
- No support for port mapping in the PDOs

9.3 Integrating your device in TwinCAT

All devices which are shipped with an USB stick that holds an ESI file for those series support EtherCAT. This ESI is basic and global one for all series. Alternatively, that file can be obtained upon request. The file is simply put into a dedicated folder in the TwinCAT installation, typically in c:\TwinCAT\<twincat_version>\Config\Io\EtherCAT\

After installing that file and restarting the TwinCAT IDE, our EtherCAT slaves can be integrated into the setup with the "**Insert EtherCAT Device**" dialog and by selecting the device name "IF-AB-ECT (for standard)" or "IF-AB-ECT (for bidirectional)" if you have bidirectional power supply from PSB or PSBE series. The differentiation is because bidirectional devices require more objects in the PDO.

Note: a scan for boxes can't distinguish automatically between the entries for standard and bidirectional devices, so in case you have any bidirectional model from PSB or PSBE series manual selection.

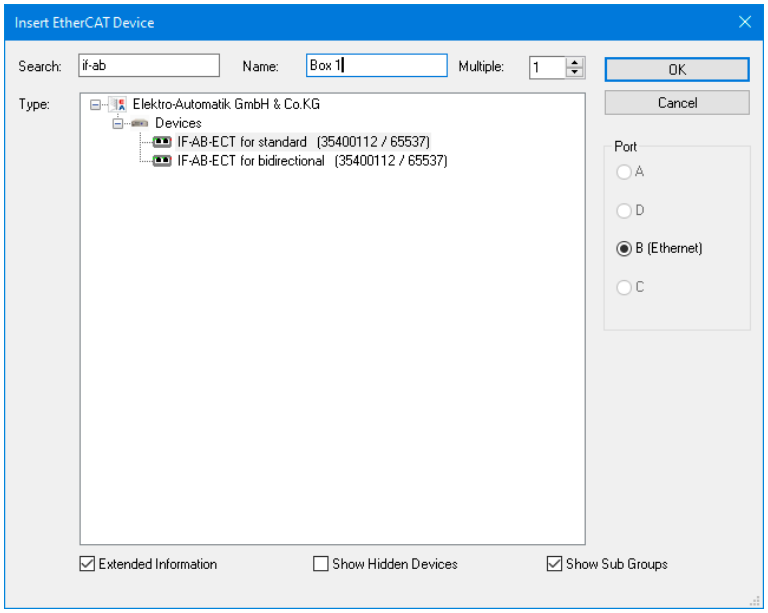

9.4 Data objects

The devices internally use ModBus protocol and for CANopen over Ethernet communication in both directions the messages are translated. This is why the reference for all cyclic data (PDO) and acyclic data (SDOs) are those ModBus register lists. They are included with the device on USB stick (or are available as download) as part of the programming documentation. The acyclic objects are downloaded from the device when accessing an online EtherCAT slave in tab "CoE" in TwinCAT. Offline objects in form of an EDS file are not available. Together with the PDO defined in the ESI file the complete list of indexes becomes accessible and allow the user to completely control the device.

There is a connection between the CoE indexes and the ModBus register numbers in the lists. You can translate both back and forth.

- **Translating ModBus register ► CANopen index**

ModBus register number in decimal + 8193 ► convert to hexadecimal = index

Example: you want to set the device into remote control mode and want to find the corresponding CoE index. In the register list you have register number 402 for this task. Calculation: 402 + 8193 = 8595 ► converted to hexadecimal it's 0x2193, hence index 2193.

- **Translating CANopen index ► ModBus register**

CANopen index in hexadecimal - 0x2001 ► convert to decimal = register

Example: you need know the meaning of the bits in the PDO object "Status". Find the corresponding CoE index in the index list. Here it's 21FA. Calculation: 0x21FA - 0x2001 = 0x1F9 ► converted to decimal it's 505. In the register list you will find register number 505 and the layout of the 32 bit value.

9.4.1 Sub objects in the RxPDO

The ESI file defines the same set of sub objects for all our EtherCAT slaves in the RxPDO:

Name	EtherCAT data type	Length in bytes	ModBus register	Short description
Status	UDINT	4	505	Device status
Voltage Monitor	UINT	2	507	Actual voltage on DC input/output (in per cent)
Current Monitor	UINT	2	508	Actual current on DC input/output (in per cent)
Control	UDINT	4	-	Not documented
Voltage select	UINT	2	500	Set value of voltage (in per cent)
Current select	UINT	2	501	Set value of current (in per cent)
Power select	UINT	2	502	Set value of power (in per cent)
Resistance select [1]	UINT	2	503	Set value of resistance (in per cent)

Bidirectional devices from series PSB and PSBE have more set values, so the box definition "IF-AB-ECT (for bidirectional)" should be applied to get access to these additional objects:

Name	EtherCAT data type	Length in bytes	ModBus register	Short description
Current select (EL)	UINT	2	499	Set value of current (in per cent) for sink mode
Power select (EL)	UINT	2	498	Set value of power (in per cent) for sink mode
Resistance select (EL) [1]	UINT	2	504	Set value of resistance (in per cent) for sink mode

9.4.2 Sub objects in the TxPDO

Objects in this PDO subset are meant for device control. With date 09/2023 only set values can be transferred via the PDO, everything else can be accessed using SDOs.

Name	EtherCAT data type	Length in bytes	ModBus register	Short description
Voltage select	UINT	2	500	Set value of voltage (in per cent)
Current select	UINT	2	501	Set value of current (in per cent)
Power select	UINT	2	502	Set value of power (in per cent)
Resistance select [1]	UINT	2	503	Set value of resistance (in per cent)

Bidirectional devices from series PSB and PSBE have more set values, so the box definition "IF-AB-ECT (for bidirectional)" should be applied to get access to these additional objects:

Name	EtherCAT data type	Length in bytes	ModBus register	Short description
Current select (EL)	UINT	2	499	Set value of current (in per cent) for sink mode
Power select (EL)	UINT	2	498	Set value of power (in per cent) for sink mode
Resistance select (EL) [1]	UINT	2	504	Set value of resistance (in per cent) for sink mode

1 This value belongs to a feature called "resistance mode" (short: UIR), which isn't available with all series

9.4.3 SDOs

The acyclic data objects for use in the EtherCAT system are defined in your device and can be downloaded from it. It requires the device to be online with the EtherCAT system. There is no separate documentation for the downloadable data objects. Like with CANopen (see *„7. CANopen“*), the register lists which are part of the programming documentation are the reference for the SDOs and explain data content and function. There is also an entire section in this document dealing with the ModBus protocol and its examples.

9.5 Control

Basic rule: the objects in the TxPDO can only control the set values U, I, P and R. All other functionality of the device is controlled via SDOs, in this case CANopen indexes. Even essential features like "remote control on/off" or "DC on/off" cannot be cyclic, as the devices don't support object mapping into the TxPDO.

Information about object access via SDOs with CANopen/EtherCAT can be found in the documentation of the software in use.

9.5.1 Use of the CANopen data objects

Please refer to *„7.3. User objects (indexes)“*.

The basic procedure for access and control of a device doesn't differ from other interface types when using EtherCAT. Any device being configured and used as EtherCAT slave follows the information and instructions given in the sections *„3.2. Control locations“, „3.5. Special characteristics of remote control“, „4.3. Format of set values and resolution“, „4.4. Translating set values and actual values“* and *„4.7. About the register lists“.*

A. Appendix

A1. Device classes

For distinction of different device series and especially of variant within one series a device class number is assigned to every device. It can be read from the device (register 0 or SYSTEM:DEVICE:CLASS?) and be used to easily distinguish a power supply from an electronic load when scanning a network for units of our make.

Class	Assigned to series
16	PS 2000 B TFT Single
20	ELR 9000
21	PSI 9000 2U/3U (models from 2014)
23	PS 5000
24	PS 2000 B TFT Triple
28	PS 9000 2U/3U (models from 2014)
29	PSI 5000
30	PS 9000 1U
32	ELR 9000 TFT
33	PSI 9000 2U/3U TFT
34	ELR 9000 TFT 3W
35	PSI 9000 2U/3U TFT 3W
38	PS 9000 2U/3U 3W
39	EL 9000 B
41	ELR 5000
42	PSI 9000 DT
43	PSE 9000 3U
44	EL 9000 DT
45	PSI 9000 Slave
46	EL 9000 B Slave
47 / 50	PSI 9000 T
48 / 51	EL 9000 T
49 / 56	PS 9000 T
52	USB type B port on the simple HMI of PSI 9000 3U/WR Slave, EL 9000 B 2Q, ELR 9000 B Slave, EL 9000 B Slave
53	EL 9000 B 2Q
54	EL 9000 B 3W
55	EL 3000 B
57	PS 3000 C
58	PSB 9000
59	ELR 9000 HP
60	ELR 9000 HP 3W
61	PSB 9000 Slave

Class	Assigned to series
62	PSB 9000 Slave (front USB only)
63	PSB 9000 3U 3W
64	PSBE 9000
65	ELR 9000 HP Slave
66	PSB 10000
67	ELR 10000
68	PSI 10000
69	PSBE 10000
70	PSB 10000 Slave (front USB only)
81	ELR 10000 (production date since 01/2022)
82	PSI 10000 (production date since 01/2022)
83	PSB 10000 (production date since 01/2022)
84	PSBE 10000 (production date since 01/2022)
85	PS 10000
86	PU 10000
87	PUB 10000
88	PUL 10000

Legend:

TFT = Model/series with TFT touch panel (older series had LCD touch panel)

3W = Model/series with option 3W installed

1U / 2U etc. = Height of 19" enclosure in standardized height units

T = Enclosure type: Tower

DT = Enclosure type: Desktop

R = Enclosure type: wall mount

2Q = Slave unit for two-quadrants operation

Elektro-Automatik

EA Elektro-Automatik GmbH & Co. KG
Development - Production - Sales

Helmholtzstraße 31-33
41747 Viersen
Germany

Fon: 02162 / 37 85-0
Fax: 02162 / 16 230
Mail: ea1974@elektroautomatik.de
Web: www.elektroautomatik.de