THE UNIVERSITY OF BRITISH COLUMBIA OKANAGAN CAMPUS

FACULTY OF APPLIED SCIENCE, SCHOOL OF ENGINEERING

ENGR 499 - Engineering Capstone Design Project

Dr. Kenneth Chau

Dr. Alon Eisenstein

Final Design Report

Locomotive Hydrogen Tank Cradle

Dr. Gordon Lovegrove

Kaden Workun

Group F8

Johannes Galan (20729737)

Baran Hosal (61331401)

Divyam Khubar (13367669)

Jasper Palmer (89960447)

Narendra Singh (12040226)

Tristan Wolf (38665303)

Table of Contents

1.0 Introduction and Context **4**
1.1 Global and National Context 4
1.2 The Problem: Mechanical and Market Barriers 5
1.3 Significance and Solution Overview 5
2.0 Problem Scope and Constraints **5**
2.1 Scope 5
2.2 Constraints 6
3.0 Design Specifications **7**
4.0 The Design Process and Final Solution Selection **8**
4.1. Tank Selection 9
4.1.1. Criteria 9
4.1.2. Weights 10
4.1.3. Normalization 11
4.1.4. Results 11
4.1.5. Discussion 12
4.2. Mounting System Selection 12
4.3. Structural Frame Design and Height Optimization 13
4.4. Material Selection: Safety vs. Weight 15
4.5. Suspension and Vibration Mitigation 16
5.0 Final Design Description **16**
5.1 Architecture and Geometry 17
5.2 Material Selection 17
5.3 Assembly and Maintenance Design 17
5.4 Hydac Mounting 17
5.5 Hydrogen Storage Tanks 18
5.6 Sensors 22
5.7 Cost Analysis and Budget Evaluation 22
6.0 Final Design Performance Evaluation **23**
6.1 Strap Performance 24
6.1.1 Performance Findings 24
6.1.2 Methodology 25
6.1.3 Strap Specification Validation 26
6.2 Frame Performance 27
6.2.1 Frame Deformation and Stress 27
6.2.2 Hydrogen Embrittlement 29
6.2.3 Methodology 30
6.2.4 Frame Specification Validation 30
6.3 Fastener Performance 30
6.3.1 Concrete Anchors 31

6.3.2 General Fasteners....31
6.3.3 Fastener Specification Validation....31
6.4 Cost Performance Evaluation....31
7.0 Product Risk Assessment....32
8.0 Ethical Considerations of Final Design....36
8.1 Safety, Health and Environmental Protection....37
8.2 Integrity, Equity and Inclusion....38
8.3 Accountability and User Privacy....39
9.0 Project Success Analysis....40
9.1 Objective Alignment....40
9.2 Reflection on Design Trade-offs....40
9.3 Future Insights....41
10.0 References....42
Appendix....45
Appendix A - Team Contribution....45
Appendix B - Financial Summary....46
Appendix B.1: Accelerometer Cost....46
Appendix B.2: Hydrogen Sensor Cost (Sisco)....47
Appendix B.3: Hydac Straps Quote....48
Appendix B.4: Frame Quote (Metal Super Market)....49
Appendix B.5: Tank Quote (Hexagon Purus)....49
Appendix B.6: Bolts and Nuts quote....50
Appendix C - MATLAB Scripts....52
Appendix C.1 - Longitudinal FEM Analysis....52
Appendix C.2 - Lateral FEM Analysis....57
Appendix C.3 - Wedge Anchor Code....62
Appendix C.4 - Tank Selection MCDA....63
Appendix C.5 - Strap Mount Pressure Calculation....66
Appendix D - Design Specifications Table....68
Appendix E: Tanks and Companies....71
Appendix F: Decision Matrix....73

1.0 Introduction and Context

1.1 Global and National Context

Reducing greenhouse gas (GHG) emissions is crucial to building a better future. In Canada, diesel locomotive emissions amounted to roughly 5.36 kilotons of CO_2 (Environment and Climate Change Canada, 2025). While this represents a small fraction of the overall emissions for transport, it is still an area that can be greatly improved (Railway Association of Canada, 2023). One of the novel ways to do this is through hydrogen-powered/assisted locomotives. The goal of these systems is to provide a cost-effective and easily implemented hydrogen solution which would greatly reduce GHG emissions. Several different components and systems go into a hydrogen fuel sequence to run a locomotive; however, our project focused on designing a cradle to hold the required hydrogen tanks for a proposed hydrogen locomotive. The locomotive model may be seen below in Figure 1.0 for an insight into our design space.

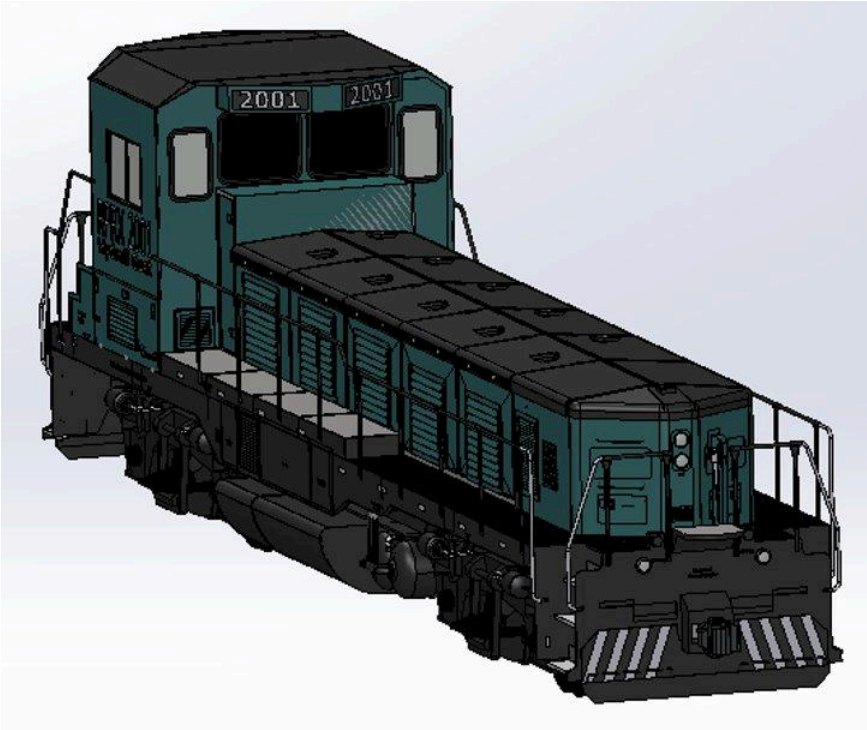

Figure 1.0 - Greengoat locomotive CAD model

1.2 The Problem: Mechanical and Market Barriers

The nature of the problem involves overcoming significant mechanical and chemical challenges, which current commercial solutions are unable to address with sufficient modularity. It is important to note that hydrogen tanks experience a considerable amount of expansion during refuelling and endure significant temperature fluctuations from -32°C to 60°C which would require an appropriate mounting system. Additionally, the cradle is expected to experience significant jerk loads of up to 7 g/s while also resisting hydrogen embrittlement. Currently, the majority of hydrogen rail storage is highly customized into specific locomotive bodies, hence leaving quite a large gap in the market for a universal, modular cradle that can be used to retrofit existing diesel fleets. Our design fills this gap.

1.3 Significance and Solution Overview

The significance of this project lies in its capability to provide a modular retrofitting system that would enable a smooth transition to hydrogen energy without the high cost of total fleet replacement. Ultimately, the final solution maintains structural integrity, integrates essential safety features (shock, leak sensors), transitioning from a conceptual research into a manufacture-ready design which addresses the important durability and modularity gaps in current storage solutions.

2.0 Problem Scope and Constraints

2.1 Scope

The scope selected for this project will be defined by budget and flexibility. First and foremost, a flexible design in the context of our project is defined as the capacity to accommodate as many locomotives as feasible and accommodate tank variations. This means even though the design for this project will be for the Green Goat, it should be modular, allowing for easy design changes if different locomotives require different mounting solutions.

The client for this project is Dr. Lovegrove, an associate professor at UBCO and head of railway research at UBC. This project is part of the Hydrail initiative to help transform North American rail networks to zero emission using hydrogen-powered systems (Lovegrove et. al., n.d.). Other stakeholders include the general public and railway maintenance workers.

The current hydrogen rail development offers benchmarks; however, it also identifies gaps that this initiative seeks to fill. The two main types of current solutions are; Alstom's Coradia iLint, which uses hydrogen storage systems built around railcars. The other example is CPKC's hydrogen locomotive program for heavy-haul freight, which converts current diesel locomotives to hydrogen-electric powertrains.

Although these show that hydrogen propulsion is feasible, neither offers a completely modular tank cradle system. This gives our project a special chance to construct a universal cradle that can be utilized on a variety of other locomotives.

This report covers CAD modeling, structural analysis under realistic load cases, and a careful look at how to isolate the tanks from the vibration environment of an active rail line. Additionally, material choices are evaluated not just for strength, but for hydrogen compatibility as well. Fastener selection, joining methods, and load path design are all part of the picture. What this project doesn't include is a full-scale physical prototype. Given the time and resource constraints of the project, validation is done through analysis.

2.2 Constraints

The transition from diesel to hydrogen-powered locomotives requires the safe and efficient integration of a hydrogen storage system. This is a simple idea by itself; however, there are a number of complications. The original diesel-electric operation does not have provisions for housing hydrogen tanks, creating a need for a custom structural solution. Problems like hydrogen tank expansion, railway vibrations, hydrogen corrosion and maintenance all need to be considered. These concerns and more are reflected in the design specifications.

What follows is a more in-depth look at the primary design complications to further contextualize the problems our project aims to solve. Hydrogen tank expansion is a key issue that will need to be integrated into our design. The tank expansion occurs as the tanks are filled and emptied during use (Feng, 2025). These tanks can expand and contract by ±2.5% as pressure and temperature fluctuate during normal operation. Next, the railway vibrations and shocks are another design cornerstone, as not factoring the vibrations or shocks in could lead to premature failure of the tanks and leaks (Coskun, 2024). The structure must be rigid enough to handle severe operational loads, including longitudinal and lateral forces. Additionally, material selection adds another layer of complexity. Hydrogen can be a difficult

gas to work with, as many everyday materials will become brittle and/or corroded from exposure to hydrogen (Lee, 2016); a cradle that is embrittled will pose serious safety risks.

Finally, the maintenance factors are critical; if our design hits our other key design pillar yet fails to be easily maintainable, this would render the design almost useless. The cradle must support daily operations such as inspect components, replace tanks, and interface with onboard sensors without excessive difficulty. Our design will aim to solve all these problems in the simplest and cost-effective design.

Due to the novelty of this design environment, there are no regulations related to hydrogen storage on locomotives, although our design specifications still have meaningful safety requirements to meet existing electrical equipment mounting standards.

3.0 Design Specifications

The complete set of quantitative design specifications for the hydrogen tank cradle is documented in appendix D. This section provides the context and justification for these specifications, which will be used to validate the final design and measure its performance against the project's objectives.

The specifications are separated into Design Requirements (Must Have) and Evaluation Criteria (Goal) within the core aspects of the design (Functional, Safety, Performance, Material, Lifespan, Monitoring and Economic). This structure is to address the non-negotiables while leaving room for aspirational demands within each category.

Design Requirements (Must Have): These are the criteria derived from the project's critical constraints/safety and functionality. Some must-haves include ensuring hydrogen containment under extreme mechanical events (collision and derailment) and satisfying the client's minimum capacity of 60+/-2 kg of hydrogen. These also account for the operational reality of the system, such as surviving ambient temperatures as low as -32 °C and adhering to regulatory standards for safety and tooling.

Evaluation Criteria (Goal): These are the targets used to assess the solution's overall quality, marketability, and efficiency. They directly address the need to overcome the shortcomings of current hydrogen-rail solutions. The Goals demand high modularity (e.g., Tank Variation Flexibility), a rapid maintenance profile (less than 2 hours tank swap time), and adherence to the client's low-cost objective (less than $100 000 CAD with flexibility for +25%). By quantifying these goals, the sheet provides a precise method for comparing alternatives and tracking compromises made during solution development.

A justification section is included in the Design Specification Sheet to formally establish the link between the project's foundational analysis and its specific technical requirements. This section serves to demonstrate that every requirement or goal is necessary, defensible, and contributes to the overall success of the project by addressing a constraint or solving a known problem. For example, the justification explains that the Structural Expandability Must Have is necessary because it directly addresses the gap in current solutions by supporting modularity. Similarly, the justification for Shock Resistance connects the specification to the shortcomings of current cradle solutions that fail to isolate railway vibrations.

To ensure the design is technically sound and defensible, each specification is paired with a detailed justification that connects our engineering targets directly to the project's scope and constraints, and the client's operational needs. This section demonstrates that every requirement has a specific problem, such as preventing tank slippage during a 7g longitudinal shock (in the safety category). For example, the Structural Expandability requirement is justified by the need for a modular system that can be retrofitted across different locomotive types, addressing a major gap in current, highly-customized hydrogen storage solutions. Similarly, the Vibration Resistance specifications are justified by the requirement to isolate the tanks from the unique 3 to 7g/s jerk loads inherent to rail environments which could lead to slippage of the tanks or failure of the mounting system.

4.0 The Design Process and Final Solution Selection

The design process was not strictly linear, but rather iterative and interdependent across multiple subsystems. Key decisions regarding tank selection, structural design, vibration mitigation, and material choice were evaluated in parallel, with each influencing the others. For example, tank geometry and mass directly affected cradle loading and vibration response, while mounting strategies informed material and isolation requirements.

As a result, the final design reflects a series of coordinated trade-offs rather than isolated decisions, balancing structural integrity, safety, cost, and system simplicity within the constraints of the locomotive environment.

4.1. Tank Selection

The design process began with an extensive search for high-capacity hydrogen tanks to meet the client's minimum 60kg of hydrogen fuel requirement while staying within the spatial constraints of the locomotive and constrained to 35MPa designed pressure to work with the clients' systems. The spatial constraints for the cradle were determined through analysis of the Greengoat locomotive CAD model provided by the client. Based on this model, the available installation envelope was approximated as 1200 mm (height), 1866 mm (width), and 3364 mm (length), though the client provided more flexibility for the height.

The design process began with the tank selection. After collecting information on 12 different tanks to be considered, as may be found in appendix E, it became problematic to decide which to choose. In the preliminary design, we chose the cheapest tank, however this was associated with a poor utilization of the available space and thus a new tank was required. A Multiple-criteria Decision Analysis (MCDA) approach was used for the tank selection, which consists of 4 steps. Firstly, a list of criteria against which the tanks were to be compared against was created. Secondly, weights were assigned to the criteria to account for their significance. Thirdly the data is normalized by each criteria. Finally, the scores associated with the decision are computed and compared.

4.1.1. Criteria

For this problem, the criteria considered allow for a compensatory analysis, i.e. we consider the tradeoffs between e.g. cost and weight. Our criteria were carefully selected to fill the critical area which could both inform the impact of the alternative on the design specifications and utilizing information available from a multitude of manufacturers.

The first criteria considered is the total weight of all required tanks. This is directly related to the required strength of the cradle, and thus the cost of the cradle. Thus, this criteria should be minimized to reduce both of these secondary effects. However, the overall weight of the cradle was preferred to be kept high, as the locomotive weight is a significant concern. A higher locomotive weight is ideal for operations, as this provides more friction and thus better performance considering the amount of power the locomotive is able to exert on the rails. This is a particular problem for the Green Goat, as with the removal of the heavy conventional engine and associated systems, the locomotive is significantly lighter than desired. For this reason, and the fact that while the weight of the tanks is a significant contributor to the cost it is not entirely responsible for the overall project cost which we would like to minimize, the

weight factor associated with the weight criteria was reduced, which is discussed in further detail in the weighting section.

The second criteria considered are the principle dimensions of each tank. These are extremely important to our final selection, as the overall dimensions required for the cradle are a significantly limiting factor for the design. Because of how significant it is, this criteria is considered a non-compensatory criteria. Thus, alternatives which cannot meet our minimum specifications are outright excluded from the analysis. The true non-compensatory component of this criteria is the tank length. For our application, the tank and other equipment required to be attached to either end of the tank must be no more than 3.364m in length, as this is the minimum distance between the bulkheads available. The second component of this criteria is the diameter, and from this combined with information about the capacity of each tank and thus the number of required tanks. For the purpose of this analysis, mostly considering tanks which occupy most of the available length, the required space was determined exclusively from a 2d analysis, rather than a 3d analysis which permitted tanks to be repeated longitudinally. Additionally, combinations of tank models were not considered as this would significantly increase shipping costs, complexity, and the risk of the project. Using these assumptions, and the available space in the cowling, the minimum required height associated with optimal packing utilizing the available width minus 20cm to account for frame and tolerance requirements was determined. This was then cross-checked against our goal of 1.25m minus 20cm, again to account for space required by the frame and protruding bolt heads, to determine if the array of tanks could theoretically fit. If the combination could not fit, it was excluded from the analysis.

The third criteria considered was the total cost of all tanks required for the project. This was calculated from the number of tanks required and the price per tank. This was the most significant factor in our analysis, as the tanks are the primary expense of the project and provide significant cost reduction possibilities. The decision matrix considering all compiled data may be found in appendix F.

4.1.2. Weights

Having defined measurable, relevant criteria, the second step in the analysis is to apply weights which judge how much each criteria we think should contribute to our selection, effectively how much or how little we are willing to accept a trade-off of this criteria. With only 2 compensatory criteria in our analysis, the cost and the weight, no complex mathematical methods of determining the weights are required. Instead, a qualitative

approach is taken to determine the balance of preference for both of our criteria. Considering that the higher weight of the tank has both pros and cons, and only accounts for a fraction of the overall cost of the project, especially when compared to the cost of the tanks, the weights were decided to favor the tank cost twice as much as the total weight.

4.1.3. Normalization

Normalization is required to ensure our analysis is free from the effects of differences in units between each criteria, in addition to ensuring that criteria which are considered 'costs' and criteria which are considered benefits are correctly accounted for. Both of our criteria are considered to be costs, thus normalization will ensure the lowest values are awarded the highest normalized value. For our criteria, it may be achieved either by linear methods or vector methods. The linear approach divides each value by the maximum value for that criteria, and the vector approach divides the inverse of each value by the sum of squares of inverses of each value in that criteria.

4.1.4. Results

The Technique for Order Preference by Similarity to Ideal Solution (TOPSIS) approach is utilized to assign a score to each alternative. It first defines positive ideal and negative ideal solutions, and then calculates the vector distance in n-dimensional space between each alternative and these solutions, as seen below:

$$\vec{i}^{+} = \max_{i \in alternatives\ A,\, j \in criteria\ C} (n_{ij})$$

$$\vec{i}^{-} = \min_{i \in A,\, j \in C} (n_{ij})$$

$$S^{+} = \sqrt{\sum_{i=1}^{A} \left(\left(\vec{n}_i - \vec{i}^{+} \right) \vec{w} \right)^2}$$

$$S^{-} = \sqrt{\sum_{i=1}^{A} \left(\left(\vec{n}_i - \vec{i}^{-} \right) \vec{w} \right)^2}$$

$$G = \frac{S^{-}}{S^{+} + S^{-}}$$

Where n is the normalized data, w are the weights, and G is the final grade. Applying this method for data which was normalized both linearly and by vectors, and considering both custom weighting and equal weighting provides more robustness in our decision. The calculations may be found in appendix C.4. Finally, the following results were observed:

Table 4.1 - MCDA Results

#	LN UW	LN EW	VN UW	VN EW	Grade Rank	Rank Rank	Overall Rank
A3	0.88192	0.78945	0.89349	0.80798	1	1	1
A5	0.68773	0.61179	0.69502	0.62889	2	2	2
A10	0.15691	0.27126	0.14212	0.24886	3	3	3

4.1.5. Discussion

As can be seen in table 4.1, we find a problem. We only have 3 tanks which are theoretically able to be packed into the given space, and two of them we did not receive replies to our requests from the manufacturer for price information. While the MCDA was not useful for comparing differences, it was useful for limiting our alternatives to one that does work. On this basis, the Hexagon H2-35-430X3202 tank was selected, which both theoretically fits in our available space and has a price quoted.

4.2. Mounting System Selection

During the conceptual phase, two primary mounting strategies were evaluated: rigid neck mounts with saddle supports and flexible band strap systems (Figure 4.2). Neck mounts provide high structural rigidity and additional localized support, while also minimizing occupied space within the cradle. However, these systems are typically custom-engineered, expensive, and limited in availability. Their rigid constraint also restricts the ability to accommodate radial and axial expansion of the tanks during refueling, introducing potential stress concentrations and integration challenges with fittings.

Figure 4.2: Straps mounts and Neck Mount from Hydac

In contrast, band strap systems with rubber or plastic liners offer greater flexibility and adaptability. These systems provide inherent vibration damping, accommodate manufacturing tolerances, and allow for controlled thermal and pressure-induced expansion of the tanks. Additionally, straps are widely available from multiple suppliers, simplifying procurement and reducing cost uncertainty. A quoted cost of approximately $200 per strap further supported their economic feasibility.

While strap systems introduce minor drawbacks, including additional space requirements and potential wear of the liner material over time, these were considered acceptable given the benefits in flexibility, availability, and cost.

Based on this comparison, band straps were selected as the preferred mounting solution, as they better satisfy the design requirements for expansion accommodation, vibration resistance, and maintainability. The structural reliability of the selected strap system is further validated in Section 6 to satisfy the performance/safety specs of the design (specs in appendix D)

4.3. Structural Frame Design and Height Optimization

Three primary frame concepts were initially explored: a modular multi-unit configuration, vertical and horizontal stacking arrangements, and a rigid single-frame structure, as shown in Figure 4.3.1.

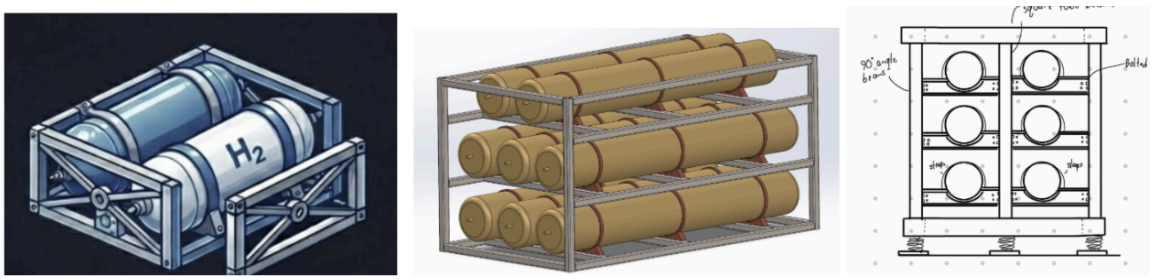

Figure 4.3.1: Design concepts for modular and rigid frames

Early CAD evaluations revealed that space constraints were the dominant limiting factor. Even with the smaller-diameter Hexagon Purus tanks, the available envelope left minimal clearance once allowances were made for structural members, mounting straps, and maintenance access (Figure 4.3.2). This immediately eliminated larger-diameter tanks and constrained feasible frame configurations.

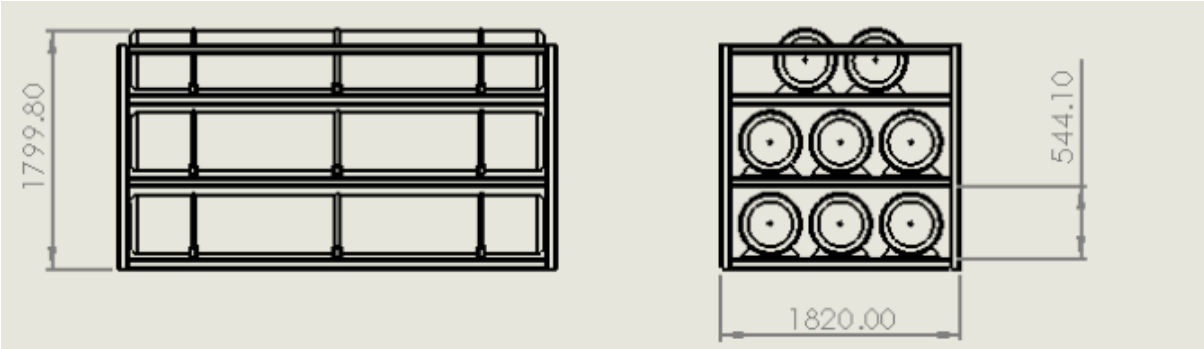

Figure 4.3.2: Dimensions of the Preliminary rigid frame model

The modular unit approach, while flexible, was rejected due to the increased number of components, mounting interfaces, and material requirements. Additionally, it failed to efficiently utilize the already limited internal volume (<1866mm w, <1200mm h), further tightening spatial constraints.

To maximize space utilization, the design transitioned away from a conservative "box-within-a-box" approach toward a tightly integrated single-unit configuration. A 3-3-2 tank arrangement was selected with trimmed beams and the tanks sticking out, allowing improved packing efficiency while maintaining accessibility (Figure 4.3.3).

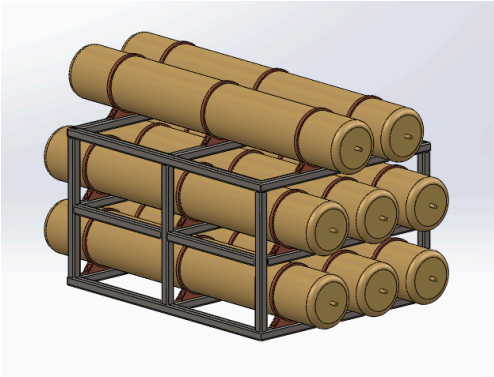

Figure 4.3.3: Second iteration of the rigid frame

During finalization, vertical height became the critical constraint. Initial designs incorporated middle-row support beams; however, this configuration exceeded the maximum allowable height of 1200 mm. To resolve this, the middle supports were removed, and the center tanks were instead suspended from the upper structural members.

This design change reduced the overall height of the cradle to within allowable limits but introduced increased loading on the top beams. As a result, the structural integrity of these members was re-evaluated to ensure they could safely support the combined tank weight under dynamic loading conditions.

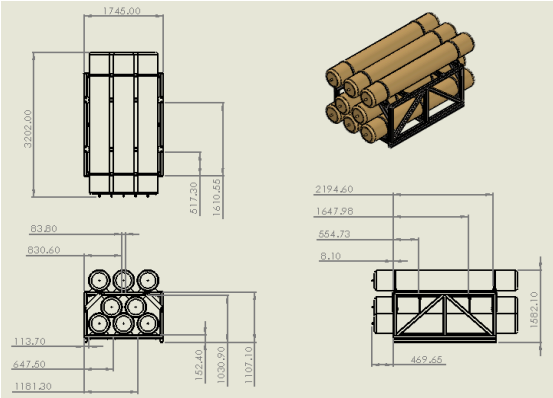

Figure 4.3.4: Final Iteration of the rigid frame model

The final configuration represents a trade-off between geometric feasibility and full modularity. While the compact single-unit design limits modular flexibility, this was an intentional compromise to satisfy strict spatial constraints. This limitation is mitigated through a clearly defined and repeatable design process, allowing the cradle to be adapted for future locomotive retrofitting applications. Additionally, the incorporation of removable middle beams using bracketed connections supports maintainability, simplifies manufacturing, and ensures compatibility with standard tooling requirements.

4.4. Material Selection: Safety vs. Weight

While standard structural steels such as ASTM A992 and A36 were initially considered for their cost-effectiveness and widespread use, they present a significant risk in hydrogen environments due to hydrogen embrittlement. Hydrogen embrittlement is a degradation mechanism in which hydrogen atoms diffuse into the metal lattice, reducing ductility and causing the material to become brittle and prone to sudden fracture under sustained or cyclic loading. This is particularly critical in applications involving high-pressure hydrogen storage, where even minor leaks can expose structural components to hydrogen over time.

High-strength carbon steels like A992 and A36 are especially susceptible to this phenomenon due to their microstructure, making them unsuitable for long-term use in hydrogen service where a 10-year lifespan is required.

Austenitic stainless steels, such as 304 and 316, exhibit significantly greater resistance to hydrogen embrittlement due to their face-centered cubic (FCC) crystal structure, which limits hydrogen diffusion and maintains material ductility. Based on data collected from the analysis outlined in section 6.2.2, 304 was susceptible to 40% relative reduction in area,

whereas 316 was 98.7 relative reduction in area. This makes 316 significantly more resistant to the phenomena (section 6.2 explains this in detail). While 304 Stainless Steel provides nearly half the cost shown in table 4.4, choosing 316 is a compromise we had to make to satisfy the safety of the design (as per spec sheet).

Table 4.4: Cost breakdown (details and quote in Appendix B.4)

Material	Length	Cost before tax	Cost Incl tax (~15%)
316	27	$5,665.17	$6,500
310	27	$2,595.79	~$3,000

4.5. Suspension and Vibration Mitigation

Based on preliminary results and the inherent structural capacity of the composite hydrogen tanks, additional suspension systems were not deemed necessary as the straps would be able to endure a 5-7g shock (discussed further in section 6). It was determined that the primary locomotive suspension would sufficiently attenuate high-amplitude vibrations before they reach the cradle, with any remaining vibrations being low in amplitude and within acceptable limits.

Furthermore, the EPDM-lined strap system provides localized damping and compliance, reducing stress transfer to the tanks. As a result, introducing additional mechanical suspension was considered redundant and would unnecessarily increase system complexity and maintenance requirements. It is noted that dynamic effects such as resonance were not explicitly analyzed and remain an area for future design refinement.

5.0 Final Design Description

The final design of the Locomotive Hydrogen Tank Cradle provides a robust, modular retrofitting solution engineered to enable the transition of the Greengoat locomotive from diesel to hydrogen power. The system is specifically designed to address the mechanical and chemical barriers of rail-based hydrogen storage, including extreme temperature fluctuations (-32^{0}C to 60^{0}C) and significant jerk loads of up to 7 g/s. While this section covers the parts selected for the final design, the overall project cost is available in Appendix B.

5.1 Architecture and Geometry

The cradle has a rectangular footprint of 1745.00 mm x 3202.00 mm and a total height of 1582.10 mm, housing eight Type IV hydrogen tanks in a stacked configuration. The structure includes eight diagonal braces (Figure 5.4) and eight gusset plates (Figure 5.3) for reinforcement, ensuring the frame remains rigid and preventing racking or deformation during operation, as shown in the cradle dimensions (Figure 5.2).

5.2 Material Selection

The entire cradle structure is fabricated from 3”x3”x0.25” 316 stainless steel. Additionally, both the gusset plates and diagonal braces are also from the same material. This material was selected specifically for its inherent resistance to hydrogen embrittlement (HE), ensuring a lifespan of over 10 years. The use of stainless steel eliminates the need for hydrogen-resistant coatings, which are prone to defects and wear at fastener contact points.

5.3 Assembly and Maintenance Design

The assembly uses a combination of permanent and mechanical joints to balance structural stability with maintenance access. The primary frame beams are welded to ensure maximum rigidity of the main chassis, while the top horizontal beams that go across the width of the beam are secured with M12 hex screws, allowing them to be removed for overhead access to the middle and bottom tank rows during inspection or replacement. Gusset plates and diagonal braces are also fastened using M12 hex screws and nuts for structural reinforcement. Additionally, all Hydac mounts are bolted directly to the frame beams to support modular installation and easy replacement.

5.4 Hydac Mounting

The tanks are secured using a modified Hydac strap system (Model HRVMW 4 R 430-441/438 ST) as seen in Figure 5.5. Each strap includes an EPDM rubber liner to isolate the tanks from high-frequency vibrations and provide a high friction coefficient of 1.6 to prevent slippage. The assembly is further modified with Belleville washers, which maintain a constant clamping force as the tanks expand and contract during refuelling cycles, ensuring stable friction and preventing movement.

5.5 Hydrogen Storage Tanks

The design focuses on the secure containment and management of eight Type IV hydrogen tanks, specifically the Hexagon Purus Model ID-H2-35-430X3202 (Figure 5.6). Each tank has a nominal length of 3202.00 mm and a diameter of 440.00 mm. As Type IV cylinders, they use a non-metallic liner overwrapped with carbon fibre composite, making them lighter and more fatigue-resistant than traditional steel tanks. They are designed to operate safely across a temperature range of −32°C to 60°C and to accommodate the expansion and contraction associated with high-pressure refuelling cycles. The eight tanks are arranged in a stacked configuration within the cradle to optimize the center of gravity while maintaining a modular footprint suitable for retrofitting existing locomotives.

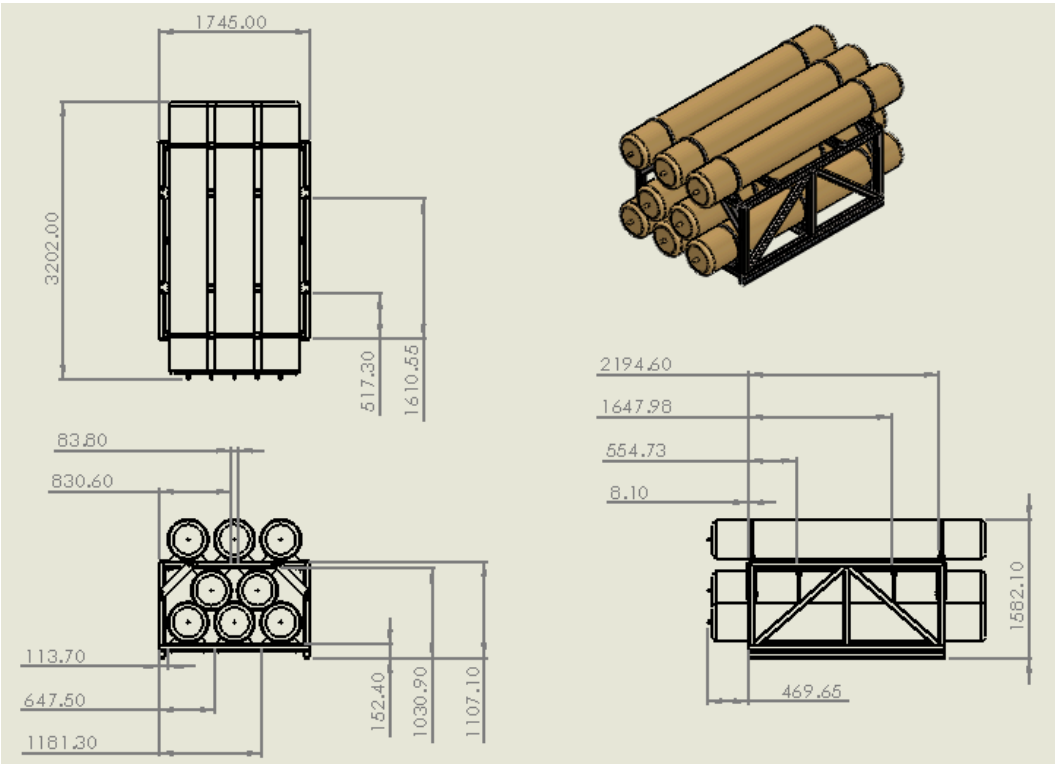

Figure 5.1 - Overall Dimensions in mm

Locomotive Hydrogen Tank Cradle

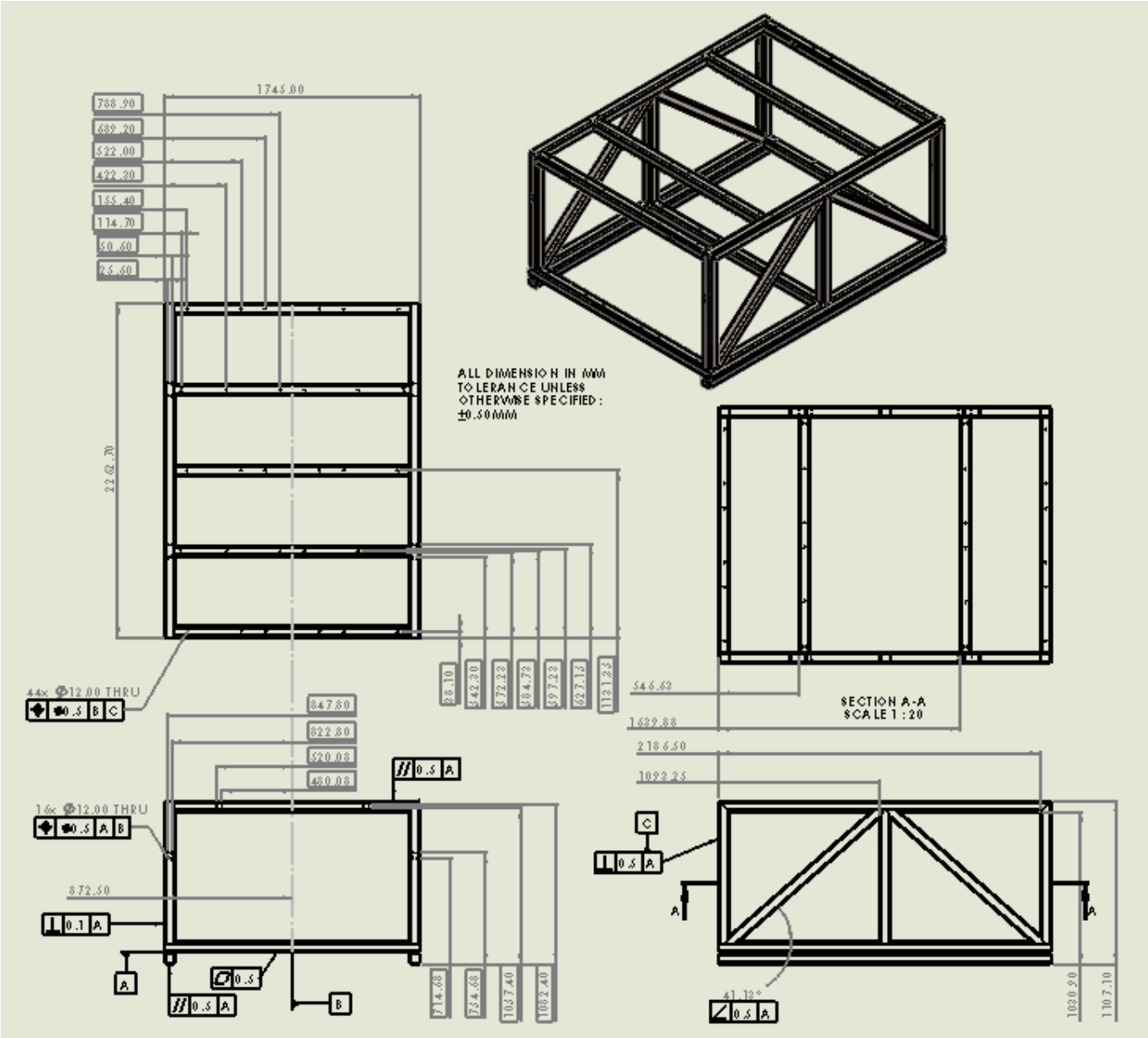

Figure 5.2 - Cradle Dimensions in mm

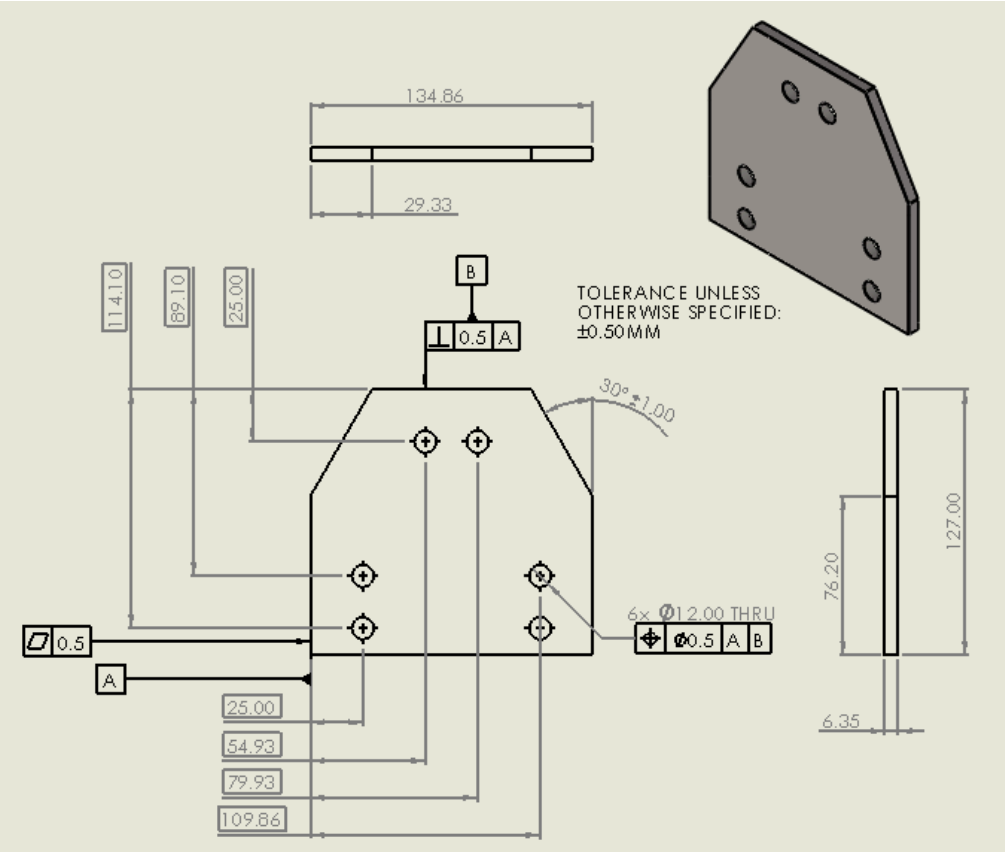

Figure 5.3 - Gusset Plates

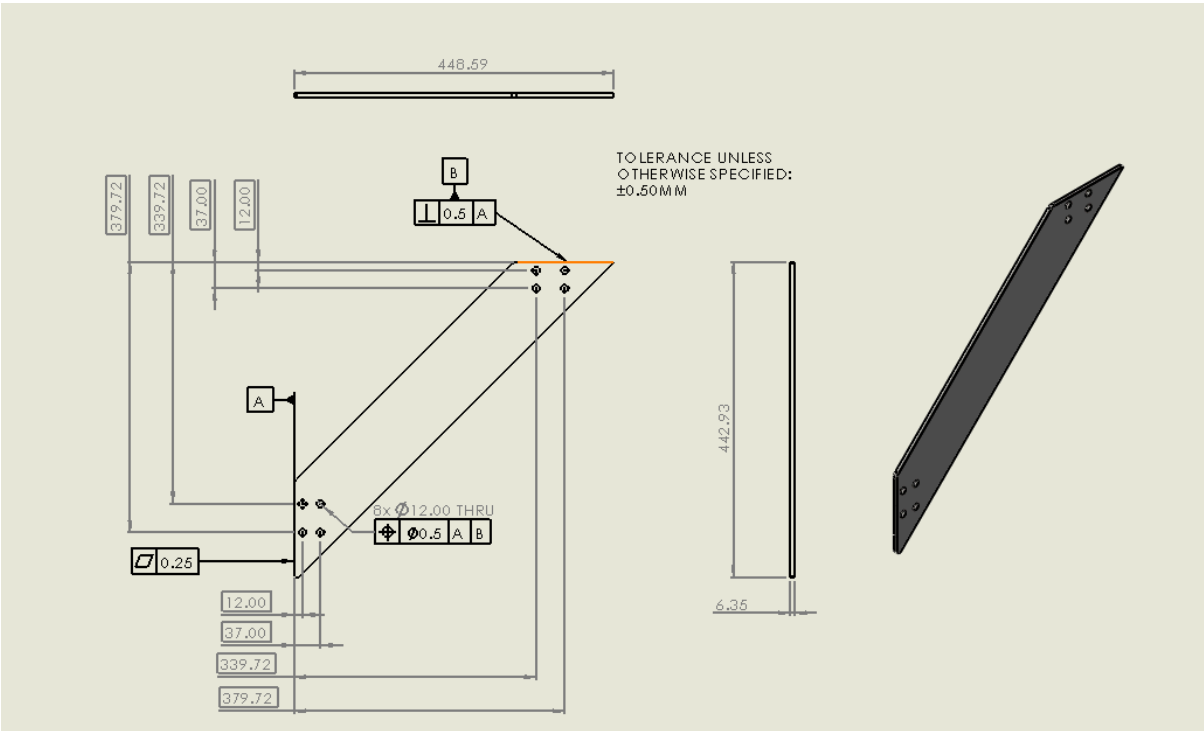

Figure 5.4 - Diagonal Brace

Locomotive Hydrogen Tank Cradle

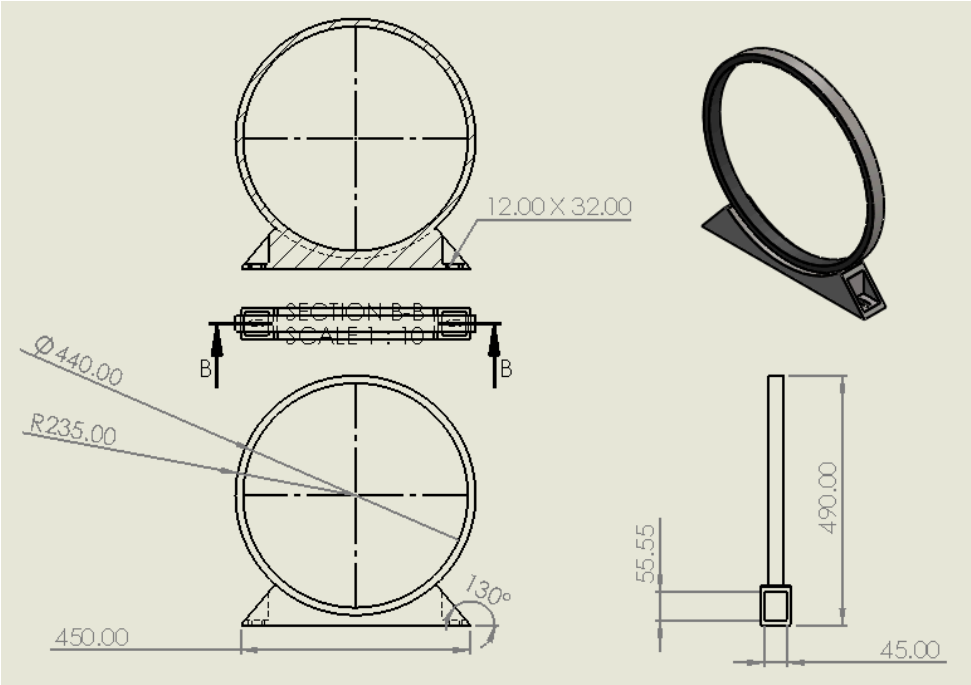

Figure 5.5 - Hydac Mounts Dimensions in mm

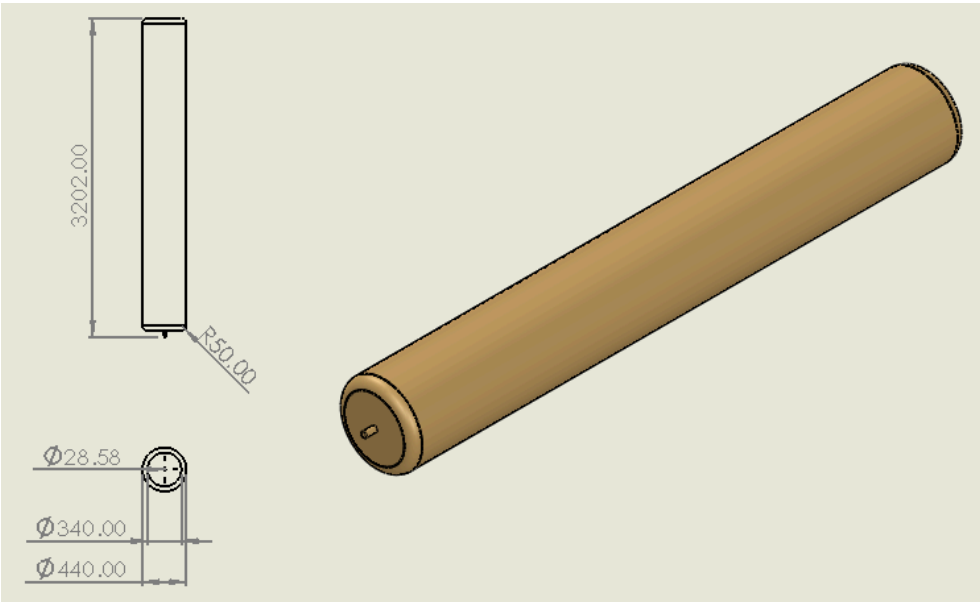

Figure 5.6 - Hydrogen Tank Dimensions in mm

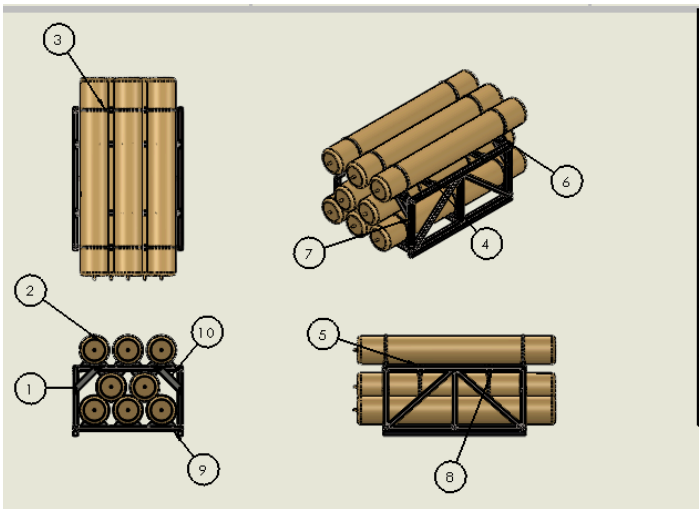

ITEM NO.	PART NAME	DESCRIPTION	QTY.
1	Hydrogen Tank Cradle		1
2	Hydrogen Tank	Hexagon Purus Type IV Tank. Model ID - H2-35-430X3202	8
3	Hydac Mount	Model ID: HRVMW-4-R-430-441/436ST	19
4	Gusset Plate		8
5	B18.2.3.2M - Formed hex screw, M12 x 1.75 x 120 --30WS		24
6	B18.2.3.2M - Formed hex screw, M12 x 1.75 x 100 --30WS		36
7	B18.2.3.2M - Formed hex screw, M12 x 1.75 x 110 --30WS		32
8	B18.2.4.2M - Hex nut, Style 2, M12 x 1.75 --D-N		52
9	B18.2.4.5M - Hex jam nut, M12 x 1.75 --D-N		36
10	Diagonal Brace		8

Figure 5.7 - Bill of Materials

5.6 Sensors

To satisfy the system monitoring requirements outlined in the design specifications (appendix D under "monitoring"), a combination of vibration and hydrogen leak sensors was selected. For shock and vibration monitoring, the Witmotion WTVB01-485 (RS485 Modbus, IP68-rated) sensors were chosen. These sensors provide real-time measurement of vibration displacement (0–30,000 µm), frequency range (5–2000 Hz), and acceleration up to 16 g, while operating within a temperature range of −40°C to 85°C. This directly satisfies the requirement to detect and monitor shock events up to 5 g and enables continuous structural health monitoring under rail operating conditions. Their low cost (~$80 per unit) allows deployment across all tanks, ensuring full system coverage and redundancy.

For hydrogen leak detection, the GD300-H2 sensor by Sisco (0–1000 ppm range) was selected. This sensor is capable of detecting hydrogen concentrations as low as 1%, meeting the design requirement to detect leaks below 2% H_2 concentration, which is well under the lower flammability limit (~4% H_2). This ensures early leak detection, supporting safety compliance and reducing the risk of ignition or structural degradation. The cost breakdown and the link for purchase is listed in appendix B.

5.7 Cost Analysis and Budget Evaluation

A summary of the project cost breakdown is presented in Table 5.7, with detailed component-level quotes provided in Appendix B. The total estimated cost of the system is $121,360.61 CAD, which satisfies the client's budget specification of $100,000 with an allowable margin of +25%.

While the design meets the cost requirement, the cost distribution is heavily dominated by the hydrogen storage tanks, which account for approximately 90% of the total system cost. This indicates a key area for potential cost optimization. Further reductions in total system cost would primarily depend on sourcing lower-cost tank alternatives; however, this was identified as a significant challenge during the design process due to strict capacity and spatial constraints.

Overall, the design meets budget requirements, with future improvements largely dependent on advancements or availability of more cost-effective hydrogen storage solutions.

Table: 5.7 Summary of Cost

Cost Item	Notes / Specification	Qty	Cost/Pc	Cost (CAD)
Concrete Anchors	*Structural anchoring hardware*	1	N/A	$347.49
Acceleration Sensors	*Vibration / motion monitoring sensors*	8	~$85.29	$682.320
Hydrogen Leak Sensor	*Safety detection sensor*	1	634.77	$634.77
M12 304 A2-70 Bolts (100mm)	*Stainless A2-70 grade*	94	$2.23	$209.62
Frame Assembly	*Fabricated structural frame, all components*	~27 meters	$209.82/meter	~$6,514.91
Hexagon Purus H2 Tanks	*Type IV composite cylinders, Part# H2-35-430X3202*	8	$13,587.25	$108,698.00
Straps with Base Plates	*Mounting straps with base from hydac. Model HRVMW 4 R 430-441/438 ST*	19	$222.69	$4273.50
TOTAL PROJECT COST				**$121,360.61**

6.0 Final Design Performance Evaluation

For our final design performance, our evaluation will be done through calculations, mostly using MATLAB scripts. No practical or experimental values were in the scope of this project, as the cost of building practical models of the system would far exceed the budget available. However, these calculations are still deemed to be a valuable point of evaluation as the relatively simple nature of the frame and straps allows for quite accurate calculations without high complexity.

The main points to cover for our evaluation are the strap performance, cradle performance and fastener performance. Tank performance is not within our scope, as we will be buying tanks from a manufacturer.

6.1 Strap Performance

Understanding the strap performance is one of the most essential parts of the design. These are the portions of the cradle that physically secure the hydrogen tanks. If the straps are too loose, the tanks will be able to slide in the event of a longitudinal shock, which would be a severe failure and could destroy the hydrogen tank. Three key areas were considered for evaluation: the rubber liner integrity, the metal brace integrity, and accounting for tank expansion.

6.1.1 Performance Findings

First, let's examine the rubber liner integrity. The rubber liner is a crucial part of the strap as it helps isolate the tanks from high-frequency vibrations and provides a higher friction coefficient to better hold onto the tank to prevent sliding. The liner chosen for our strap system was Ethylene Propylene Diene Monomer (EPDM). This was one of the three choices available in the Hydac strap system we selected. EPDM was chosen for its extremely good temperature resistance, UV resistance and durability.[30] While Hydac doesn't provide the exact properties of the EPDM used in their straps, we used the values seen in Table 6.1 as an estimation based on a high-quality EPDM from Greene Tweed[31]. Using these values in our calculation, we found that the EPDM would be safe from failure and provide enough grip to prevent the tanks from slipping.

Table 6.1 - Summary of the mechanical properties of EPDM used in calculations

Comp Strength at Break (MPa)	Modulus at 100% Elongation (MPa)	Shear Strength (MPa)	Static Friction Coefficient	Dynamic Friction Coefficient
15.00	10.0	2.00	0.6	0.5

Shear modulus was found based on the assumption of a Poisson's ratio of 0.5 (no volume change).

Finally we must account for tank expansion. Hydrogen tanks are prone to expansion when being filled and emptied so this must be factored into our strap design otherwise it could lead to failure. In Figure 6.1 the Hydac strap that we selected (HRVMW 4 R 430-441 / 438 ST) can be seen however, it does not factor in the expansion of a hydrogen tank so we must accommodate it with a modification. To do this we will be using a set of Belleville washers to

provide the design torque of the bolt specified by Hydac while still allowing for expansion. The non-linear nature of Belleville washers means that once they reach a certain point the spring force they provide will become quite stable; this is the primary reason they were chosen as it allows us to keep a constant force on the tanks throughout expansion and contraction. A constant force means stable friction forces and no chance of slippage.

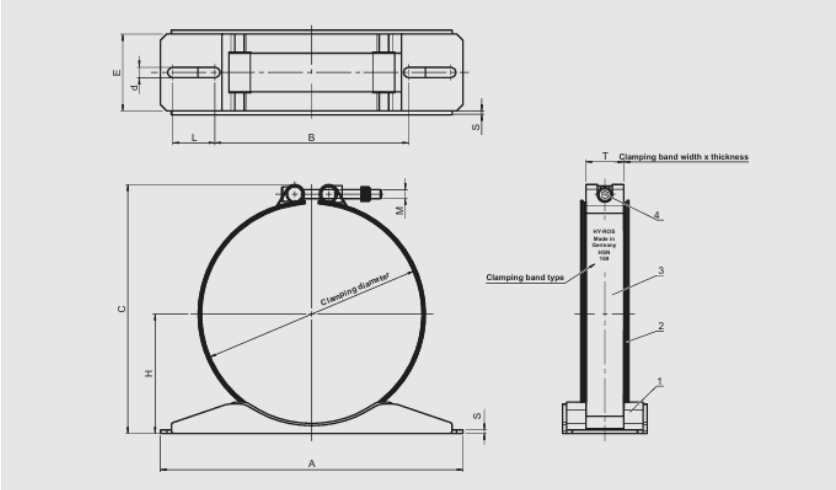

Figure 6.1 - Selected Hydac strap solution HRVMW 4 R 430-441 / 438 ST(before modification)

6.1.2 Methodology

The structural integrity of the hydrogen tank mounting system was evaluated using a conservative friction-based clamping model to evaluate stability of a single strap during locomotive operating conditions. The analysis followed a multi-stage validation process:

1. Clamping Force Derivation: The analysis began by defining the maximum design torque for the M10 swivel bolt (43 Nm). This torque was converted into a linear axial clamping force (F) using the standard torque-tension relationship (T = KDF), where a nut factor (K) of 0.2 was assumed for zinc-plated hardware.
    - $F_{bolt} = \frac{T}{K*D}$
2. Normal Force Simplification: To maintain a conservative safety margin, the bolt's axial force was simplified as a uniform normal force acting across the contact area of the strap. This assumes the strap transmits the full tension of the bolt directly into the tank's circumference.
3. Friction and Slip Resistance: The total resistive force was calculated by applying a dynamic friction coefficient (mu = 0.5) to the normal force. Utilizing the dynamic coefficient rather than the static coefficient provides a "worst-case" scenario, ensuring the tank remains secure even if a micro-slip event were to occur.
    - $F_{fric} = \mu * F_{bolt}$
4. Longitudinal Shock Validation: This calculated friction force was compared against the peak inertial load generated by a specified 7g longitudinal shock. The tank's mass

(101 kg) was used to determine the instantaneous force (F = ma) trying to displace the tank from its cradle.

- $F_{shock} = m_{tank} * 7g$

5. Material Stress Analysis: Finally, the system was checked for mechanical failure across four critical areas:
   - Acceleration force vs Friction force (shown in code as "if fric_f>g_force")
   - Bolt Integrity: Tensile stress on the M10 bolt was compared against Grade 8.8 yield limits.
     i. $\sigma_{bolt} = \frac{F_{bolt}}{A_{bolt}}$ compared with grade 8.8 tensile strength
   - Liner Stability: The EPDM rubber was analyzed for both compressive crushing and shear "tearing" under shock loads.
     i. For shear: $\tau = \frac{F_{fric}}{Contact\ Area}$ compared to shear strength
     ii. For compression: $\sigma_{comp} = \frac{F_{bolt}}{w*d*pi}$
   - Band Yielding: The stainless steel strap was checked for permanent deformation (yielding) by factoring in both the initial clamping tension and the additional stress caused by the radial expansion of the pressurized tank.
     i. $\sigma_{tensile} = \frac{F_{bolt}}{w*t}$ compared to cold-rolled yield strength

By calculating the Factor of Safety (FoS) for each component, we verified that a single-strap configuration provides sufficient holding power and material strength to satisfy the 7g shock requirement without yielding or slipping. The code for this portion can be found in appendix C.5.

6.1.3 Strap Specification Validation

All strap components met our specification of having a safety factor of 1.5 or greater except the strap metal portion itself as shown in Table 6.1.3.

Table 6.1.3 Summarized FS values from code.

Component	Factor of Safety (FoS)	Status
Bolt (M10 Grade 8.8)	1.69	PASS
Steel Band (Tension)	1.02	MARGINAL
EPDM Liner (Shear)	7.82	PASS
EPDM Liner (Compression)	29.31	PASS

While the steel band is just stable, it is notable that this analysis is only for one strap and it provides estimates rather than real values. We will still require two straps to balance the weight of the tanks which will increase the safety margins. The preliminary design in Figure 4.3.3 did use three straps per tank and through this analysis, we reduced it to two straps for cost reductions.

6.2 Frame Performance

Examining frame performance is another critical area to cover. The frame analysis was done in MATLAB using FEM. In our design process we aimed to have the frame be the most robust component as it is the most difficult to repair. Other components such as straps can be easily replaced but a repair to the frame would be costly and difficult. The key areas examined in the frame performance are: longitudinal shock, lateral shock, and hydrogen embrittlement resistance.

6.2.1 Frame Deformation and Stress

Beginning with the longitudinal shock performance. For this area the frame was found to be extremely robust. Looking at Figure 6.2 it can be seen that the deformation almost completely occurs horizontally which is ideal as in the case of failure or extreme deformation we would avoid collision with the top cowling. It is important to note that the deformation shown in Figure 6.2 has a scaling factor or 1000 applied to more easily see behaviour. With that in mind a failure of the cradle is extremely unlikely; in the case of the specified shock of 7g we only see a horizontal deformation of 0.1141 mm implying our frame could take a much more extreme impact such as a collision or derailment. The cross bracing is providing a lot of extra support as without crossbracing we see a max deformation of 3.4mm, over a 30x jump. The ‘A’ formation of the cross bracing is also important as when the cross bracing was switched to a ‘V’ formation the system began to deform both vertically and horizontally.

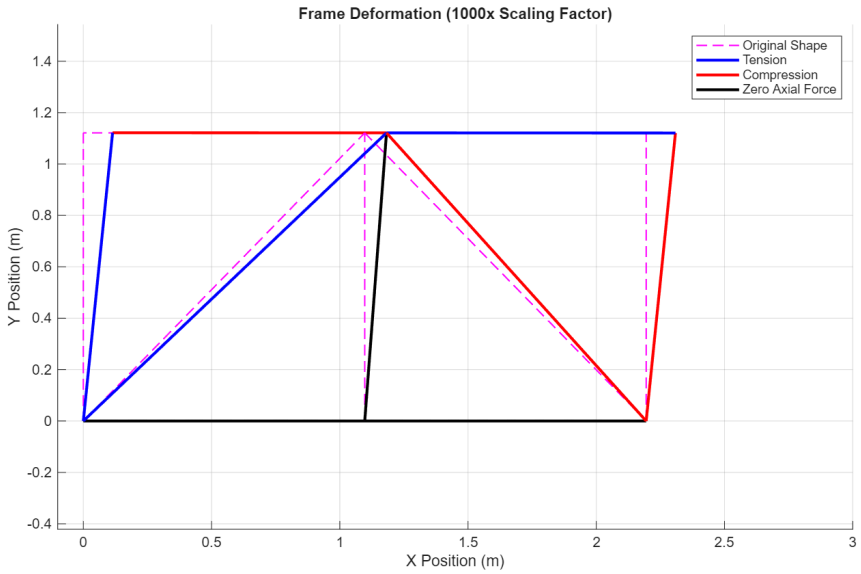

Figure 6.2 - Side frame deformation under a 7g longitudinal shock; scaling factor of 1000 used to help illustrate deformation more clearly.

Next examining the lateral shock we continue to see good results. The lateral shock was a bit more difficult to reduce as implementing large cross bracing was impossible due to the tanks being in the way. However, due to the arrangement of the tanks in our frame we were able to implement some braces in the corners and these helped decrease the deformation from 1.368mm to 1.165mm a nearly 15% reduction. While this is considerably more deformation than the results in the longitudinal direction it is still a great result and shows that our cradle is well within specifications. Looking at Figure 6.3 the deformation can be seen, once again with a scaling factor of 100.

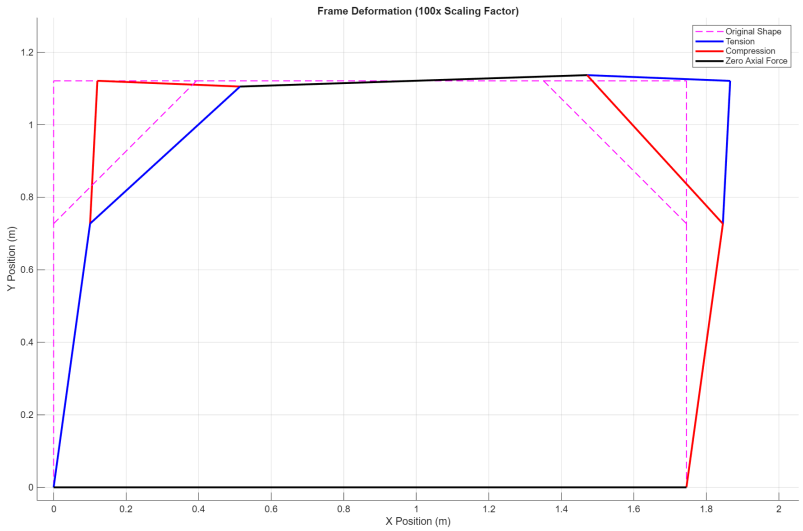

Figure 6.3 - Front frame deformation under a 7g lateral shock; scaling factor of 100 used to help illustrate deformation more clearly.

6.2.2 Hydrogen Embrittlement

The next critical factor to consider is hydrogen embrittlement (HE). Hydrogen embrittlement is a complex and serious concern as if this is not addressed our frame could easily prematurely and suddenly fail. While the frame is not expected to be exposed to a large amount of hydrogen at once, 2% H2 max typically, if hydrogen embrittlement is ignored and, for example, a valve fails and the frame is exposed to a large amount of hydrogen it could be put at serious risk if material selection was poor. We started our analysis by considering two main solutions: a coated steel or a stainless steel.

During the design process a lower quality high strength low alloy (HSLA) steel with a hydrogen resistant coating was considered. However, this comes with some major drawbacks. Firstly, the coatings vary greatly and generally are difficult to apply perfectly and often have defects which can lead to HE. The best option that was found for a coating which balanced performance and cost was Zn-Ni plating[27][28]. This generally provides good performance and is a common relatively cost effective option, however this still was opted against due to our second key consideration. Secondly, even if a coating is good, coatings are thin leading to the coating being easily damaged[27]. Furthermore, the areas where bolts are fastened are expected to be weak points as the wear from the bolts will cause the coating to wear off and thus lead to HE. With these considerations in mind we opted for a stainless steel option as it is safer.

With the decision to use stainless steel made we researched two main options type 304 and type 316. Looking at Table 6.2 we can see the results in a few critical areas. First, the relative reduction in area (RRA) represents a key measurement characteristic and compares the ductility of the material in air to the material in high pressure hydrogen. It can be seen that the RRA for 316 is far greater than 304. Type 304 actually falls far below our specification whereas 316 exceeds it[23][24]. Next the M_{d30} value, this represents the temperature at which 50% of the material will become martensitic under 30% true strain, in other words it is a measure of how stable the austenite structure is. This is important as once the structure becomes more martensitic we see an increase in hydrogen embrittlement[29]. We can see once again 316 is far superior here with the M_{d30} temperature falling well below our minimum specified temperature whereas 304 is right at room temperature making it a poor choice[25][26]. For this reason we decided to go with 316 stainless steel even though the cost is more; the safety benefits far outweighed the cost premium.

Table 6.2 - Properties of 316 stainless steel

Type	304	316
RRA (%)	40.2	98.7
M_{d30} (°C)	19	-54
Cost ($CAD/m)	96.14	209.82

[23][24][25][26]

6.2.3 Methodology

For the FEM analysis an instantaneous force of 34678N was considered as this is the force that the 5 tanks mounted to the top of the frame would provide under a 7g shock. This force was then divided by two to account for a frame on each side, and then divided by two again to split the force and apply it to each top corner. For an in depth breakdown of the coding methodology see Appendix C.1 and C.2 which provide comments throughout the code to explain the process. For hydrogen embrittlement studies we performed some simple RRA calculations and relied on preexisting data on the materials and coatings to assess whether each option meets our specifications or not.

6.2.4 Frame Specification Validation

The critical areas of our frame met and exceeded our specifications. Firstly, both longitudinal and lateral shock fall well below our 2.5mm deformation specification at a 7g shock. While some corners could have been cut while still meeting the specification, like the lateral corner braces, we typically added extra when we could if the cost was small. Next for hydrogen embrittlement 316 is an excellent performing option and exceeds our specifications with an RRA of 98.7% and a M_{d30} temperature of -54°C[26] whereas our specifications required 80% and -35°C respectively.

6.3 Fastener Performance

Fasteners are essential to specify properly and if not considered can lead to design failure. Our frame uses fasteners throughout to help provide maintenance access so we must consider the stress these fasteners endure. Another critical area of our fastener performance analysis is the concrete anchors to secure the frame to the locomotive. This is only specific to the Green Goat which has a concrete slab in the compartment where the hydrogen cradle will be placed.

6.3.1 Concrete Anchors

The concrete anchors are the sole way the entire frame is secured to the Green Goat locomotive. With that said we wanted to aim for a high factor of safety of 5x for the anchors. After our calculations we settled on using 12x M16340301 anchors. These anchors provide a safety factor of 5.74 in the vertical direction and 7.31 in the longitudinal and lateral directions. The weakest axis is the vertical so we used this result to choose the anchors. It should be noted that these anchors are made of a plain steel and rely on a zinc-platting to help with hydrogen resistance. To address the risk of chipping and scratching we will install rubber caps to protect the exposed ends of the bolts.

6.3.2 General Fasteners

The fasteners used throughout the rest of our system were 316 SS M12 bolts. We wanted to use one size of bolt to help with consistency, to account for higher stress areas the number of bolts used was adjusted. The main uses of bolts in our frame were to secure the straps to the frame and to secure the top portion of the frame. All other components of the frame were welded as they did not require modularity.

6.3.3 Fastener Specification Validation

For our fasteners the main specification to validate is our safety factor of 5 for the concrete anchors. We set this relatively high as we wanted to be sure the frame is safely secured to the frame even if a few bolts fail. With that said the 12 anchors we selected give us a minimum safety factor of 5.74 vertically which meets our specification. As mentioned with the addition of a rubber cap to protect the exposed ends these bolts while only zinc-plated should prove safe again HE.

6.4 Cost Performance Evaluation

The final design satisfies the cost requirement specified in the design criteria, with a total project cost within the allowable budget of $100,000 CAD +25% flexibility. As shown previously in Table 5.7, the total system cost remains within this limit, confirming compliance with the economic design objective.

7.0 Product Risk Assessment

The risks associated with our product were assessed with a Failure Modes and Effects Analysis (FMEA) approach. Primary failure categories were chosen to cover the cradle itself, the bolts and fasteners, the tank mounting system, and the tanks themselves. These aspects were considered to ensure that every significant failure mode could be systematically captured via the calculation of a Risk Priority Number (RPN) based on the risk severity S, risk probability P, risk detectability D and the associated warning period W, as seen in equation 7.1.

$$RPN = S * P * (1 - D * W) \tag{7.1}$$

Twenty risks were brainstormed under the chosen failure categories. These failure modes are tabulated below in table 7.1.

Table 7.1 - FMEA Failure Modes

Label	Failure Mode	Cause(s)/Mechanism	Local Effects	System Effects
C1	Longitudinal angled beam failure	Excessive decelerations, poor welding	Higher load on vertical members and asymmetric loading	Vehicle operation limited
C2	Longitudinal upper beam failure	Excessive decelerations, poor welding	Asymmetric/higher loading on vertical members	Vehicle operation limited
B1	Lateral angled beam bolt failure	Excessive lateral loads, fatigue, external damage, improper assembly	Higher loading on vertical members	Vehicle crashworthiness reduced
M1	Rubber liner loss of grip	Excessive decelerations, extreme temperatures, surface contamination, improper installation, aged polymer	Asymmetric loading on frame	Vehicle inoperable
T1	Empty tank failure	External damage, fatigue, improper assembly	Asymmetric loading on frame	Vehicle inoperable
C3	Lateral angled beam failure	Excessive lateral loads, external damage	Higher loading on vertical members	Vehicle crashworthiness reduced
C8	Resonance	Locomotive operation	Lower loading tolerance	Performance limited
C4	Lateral lower beam failure	Excessive decelerations, poor welding	Lower tank release, higher loading on remaining mounting point	Vehicle inoperable
B2	2 Tank mount bolts	Excessive decelerations, fatigue, external damage, improper assembly	Asymmetric loading on frame and lower yaw resistance	Vehicle inoperable
T2	Tank structural compromise w/o leak	External damage, fatigue, improper assembly	Explosive hydrogen gas release	Fire, explosion hazard
C5	Concrete anchor failure	Excessive loads, improper assembly, fatigue	Higher loading on remaining anchors	Vehicle crashworthiness reduced
C6	Lateral upper beam failure	Excessive decelerations	Asymmetric loading on cradle, limited restraint on upper tanks.	Vehicle inoperable
T3	Tank rupture	External damage, fatigue, improper assembly	Hydrogen gas release	Fire hazard, vehicle destruction
M2	1 bolt retaining tank mount failing	Excessive decelerations, fatigue, external damage, improper assembly	Higher stress on mounting system and remaining bolts.	Vehicle inoperable
B3	Upper lateral beam mount failure	Excessive deceleration, fatigue, external damage, improper assembly	Higher loads on remaining mounts	Vehicle inoperable
M5	Metal hoop stress failure	Excessive decelerations, fatigue, external damage, improper assembly	Tank release under loading -> Tank rupture	Vehicle inoperable
M3	Spring past stops and releasing tanks	Excessive vertical/lateral decelerations, fatigue, external damage, improper assembly	Tank release under loading -> Tank rupture	Vehicle inoperable
M4	Rubber liner shear failure	Excessive decelerations, extreme temperatures, aged polymer	Tank release under loading -> Tank rupture	Vehicle inoperable
T4	Tank leak	External damage, fatigue, improper assembly	Hydrogen gas release	Fire hazard, vehicle destruction
C7	Longitudinal lower beam failure	Excessive decelerations	Mounting compromised, entire cradle movement possible	Vehicle inoperable

Note. The prefix for the failure mode label corresponds to the category of failure mode. C indicates cradle, B indicates bolts, M indicates tank mounts, and T indicates the tanks.

From these failure modes, the severity, probability, detection methods, and corresponding detectability and warning period were carefully assessed for both the current state and their possible optimal case. The possible optimal case was found from the associated values for a possible alternative or additional sensing mechanism. The possible alternative

detection methods were considered in order to assess whether our designed solution had any oversights for failure prevention. The results may be seen below in table 7.2.

Table 7.2 - FMEA RPNs

Label	S	P	Current detection method	D	W	Possible detection method	D_P	W_P	RPN	RPN Rank	RPN_P	ΔRPN /RPN	ΔRPN/ RPN_{av}
C1	0.3	0.05	Load sensor	0.9	0.15	Strain sensor	0.99	0.2	0.013	20	0.012	0.073	0.026
C2	0.5	0.04	Load sensor	0.9	0.15	Strain sensor	0.99	0.2	0.017	19	0.016	0.073	0.035
B1	0.2	0.1	Load sensor	0.7	0.1	Displacement sensor	0.99	0.15	0.019	18	0.017	0.084	0.044
M1	0.4	0.05	Load sensor	0.6	0.1	Displacement sensor on tank	0.99	0.1	0.019	17	0.018	0.041	0.022
T1	0.6	0.05	Load sensor (not total coverage)	0.5	0.7	Surface strain sensor	0.9	0.7	0.02	15.5	0.011	0.431	0.233
C3	0.3	0.1	Load sensor	0.7	0.5	Strain sensor	0.99	0.55	0.02	15.5	0.014	0.299	0.162
C8	0.05	0.5	None	0	0	Strain sensor	0.9	0.3	0.025	14	0.018	0.27	0.188
C4	0.5	0.06	Load sensor	0.9	0.15	Strain sensor	0.99	0.2	0.026	13	0.024	0.073	0.053
B2	0.6	0.05	Load sensor	0.4	0.2	Displacement sensor on tanks	0.99	0.25	0.028	12	0.023	0.182	0.14
T2	1	0.03	Load sensor (not total coverage)	0.5	0.15	Surface strain sensor	0.9	0.15	0.028	11	0.026	0.065	0.05
C5	0.7	0.05	Load sensor	0.95	0.1	Displacement sensor	0.99	0.15	0.032	10	0.03	0.059	0.052
C6	0.5	0.08	Load sensor	0.8	0.2	Strain sensor	0.99	0.25	0.034	9	0.03	0.104	0.097
T3	0.8	0.05	Hydrogen sensors	1	0.1	n/a			0.036	8	0.036	0	0
M2	0.45	0.1	Load sensor	0.4	0.2	Displacement sensor on tanks	0.99	0.25	0.041	7	0.034	0.182	0.209
B3	0.5	0.1	Load sensor	0.8	0.1	Displacement sensor	0.95	0.15	0.046	6	0.043	0.068	0.087
M5	0.5	0.1	Load sensor	0.5	0.15	Displacement sensor on tanks	0.7	0.2	0.046	5	0.043	0.07	0.09
M3	0.6	0.1	Load sensor	0.5	0.15	Displacement sensor on spring	0.99	0.18	0.056	4	0.049	0.112	0.172
M4	0.8	0.1	Load sensor	0.8	0.2	Displacement sensor on tank	0.99	0.2	0.067	3	0.064	0.045	0.084
T4	0.8	0.1	Hydrogen sensors	1	0.1	n/a			0.072	2	0.072	0	0
C7	0.9	0.09	Load sensor	0.95	0.05	Strain sensor	0.99	0.07	0.077	1	0.075	0.023	0.049

Note. D_P indicates possible detectability, W_P indicates possible warning period, RPN_P indicates possible RPN.

As seen in table 7.2, above, while the relative difference in RPNs, relative to the existing RPN, are significant for several alternatives. A significant relative difference in RPNs was chosen at 15%, with T1, C3, C8, B2, and M2. When considering the relative RPN difference relative to the average RPN and the overall risk which must be higher than 0.015, only B2 and M2 are considered. These alternatives both involve installing displacement sensors to detect the movement of the tanks. When considering the financial and maintainability impacts of these sensors, the time for maintenance requiring cradle assembly and disassembly was estimated to increase significantly and require the special knowledge of the wiring associated with the sensors and the cost was estimated at $300 for sensors.

Additionally, crews would require additional training on the sensors and how to interpret them. Combining all of these factors against the risk mitigation provided by them shows that their benefits were not worth their consequences, thus the current sensors covered the needs of our project adequately.

From table 7.2, the RPNs associated with each alternative have been plotted in order in figure 7.1, below, to allow for a selection of a critical RPN. This critical RPN was chosen at 0.0342, corresponding to an 'elbow' in the shape of the RPN curve at this point, indicating diminishing returns associated with application of mitigating actions.

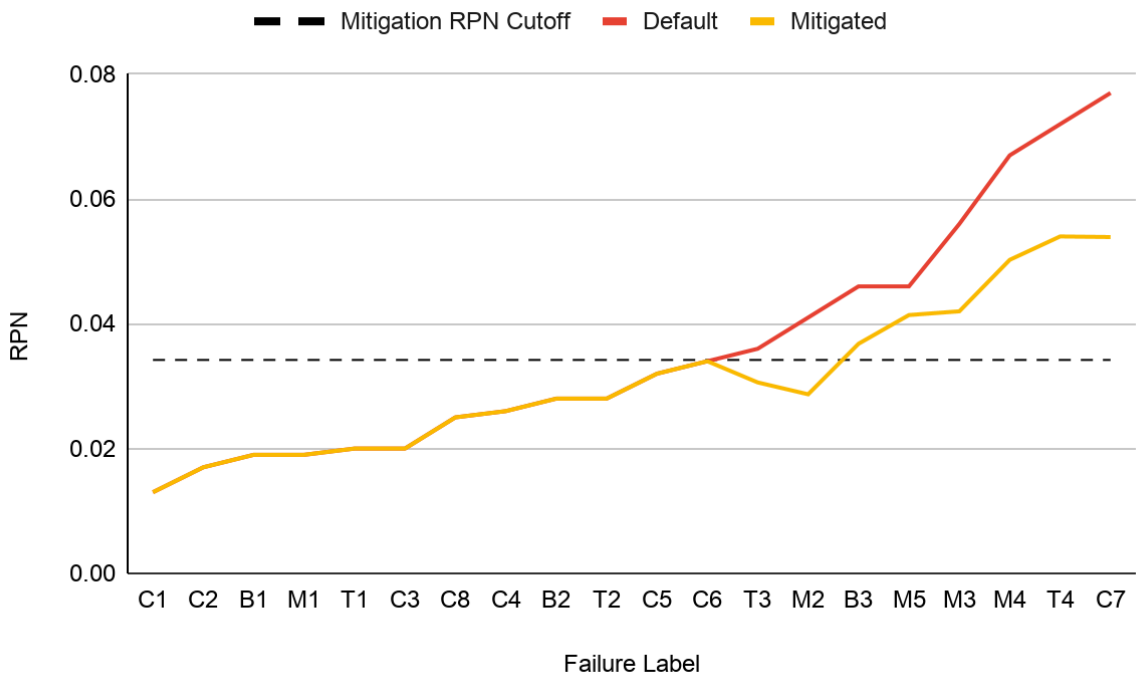

Figure 7.1 - RPNs for each failure mode, both before and after mitigating actions are applied.

Considering the cutoff value, mitigating actions for alternatives T3 through C7 were considered, and are tabulated below in table 7.3, below, where the RPN_M is calculated based on the ability to mitigate the failure mode/severity, M, as seen in equation 7.2.

$$RPN_M = RPN(1 - M) \tag{7.2}$$

When the RPNM's are calculated for the pertinent alternatives, the RPN trend may be seen in Figure 7.1.

Table 7.3 - FMEA Mitigation

Label	Further mitigating actions	M	RPN_M	Rank
T3	Establish replacement schedules and regular inspections.	0.15	0.0306	9
M2	Require regular maintenance inspections for fatigue/damage	0.3	0.0287	10
B3	Require regular maintenance inspections for fatigue/damage	0.2	0.0368	6
M5	Require regular maintenance inspections for fatigue/damage	0.1	0.0414	5
M3	Require replacement schedules and regular maintenance inspections for fatigue/damage	0.25	0.042	4
M4	Establish replacement schedules and regular inspections.	0.25	0.05025	3
T4	Ensure effective venting and fire extinguisher availability	0.25	0.054	1
C7	Require regular maintenance inspections for fatigue/damage	0.3	0.0539	2

The application of these mitigating actions to these failure modes provides a significant decrease in the RPNs. While B3 through C7 did not drop below the critical threshold, they are reduced to only extending 50% above the average RPN, a reduction from 113%.

8.0 Ethical Considerations of Final Design

A cornerstone of any project is the Ethical considerations associated with the design. This section evaluates our Final Design for our hydrogen tank cradle of the “Green Goat” through the lenses of the EGBC Code of Ethics, focusing on the professional responsibility to balance public safety, environmental sustainability and industry equity.

8.1 Safety, Health and Environmental Protection

In this sub-section, we will discuss how our Final Design aligns with EGBC Principle 1, which requires engineers to "Hold paramount the safety, health, and welfare of the public and the protection of the environment." This principle justifies the core technical specifications of the cradle.

- *Safety*

  The containment of high pressure hydrogen in a high vibration environment is one of the project's central ethical dilemmas. To achieve sufficient vibration isolation, the final design incorporates a mounting configuration and specialised strap system to isolate the tanks from jerk loads well over 7 g/s. Also, our shock sensors are able to detect jerk loads up to 16 g/s.

- *Health*

  Another ethical driver of this project is the improvement of public health outcomes through the reduction of diesel powered locomotive emissions. As previously mentioned in the Introduction and Context, the transition to hydrogen directly addresses the 5.36 kilotons of CO_2 currently produced by Canadian diesel locomotives. It is also important to note that using hydrogen powered locomotives will significantly lower the amount of noise that diesel locomotives produce in communities located near rail lines, ultimately reducing the overall noise pollution. Finally, ethically the design prioritizes the health of maintenance workers and the general public by preventing excessive hydrogen exposure. This is possible due to the presence of our selected leak sensors in our final design, which are able to detect hydrogen concentrations as low as 1%. These sensors also ensure that potential hazards are adequately identified before the 4% flammability limit is achieved.

- *Environmental Stewardship*

  Environmental Protection is another pivotal ethical consideration for this project and for this specific EGBC principle. It is important to note that while there will be a reduction in the 5.36 kilotons of CO_2 emissions caused by diesel locomotives, there will also be a carbon-intensive manufacturing phase for our selected cradle material, 316 stainless steel. However, this is ethically justified by the design's estimated 10+

year lifespan, which prevents waste from premature structural failure. Secondly, because unburned hydrogen acts as an indirect greenhouse gas, the design's focus on robust sealing and Design for Manufacture and Assembly (DFMA) principles ensures that leaks are minimized through easier maintenance accessibility. Furthermore, our final design includes the top row of tanks bolted down onto the cradle, making them more accessible for maintenance.

8.2 Integrity, Equity and Inclusion

For this ethical consideration sub-section we will dissect how our final design aligns with the EGBC Principle 13, which requires engineers to "Conduct themselves with fairness, courtesy, and good faith towards clients, colleagues, and others, give credit where it is due and accept, as well as give, honest and fair professional comment.

- *Technological Equity and Accessibility*

  By prioritizing a modular "retrofitting" design over a proprietary new-build system, the project fulfills the ethical duty of fairness to the industry. It ensures that small-scale rail operators (not just major corporations) can participate in the green transition without being excluded by the high cost of total fleet replacement.

- *A "Just" Transition for Labor*

  Reflecting on the professional responsibility to safeguard welfare, the team acknowledges that the simplified design (fewer moving parts) may impact the job roles of traditional diesel locomotive maintenance workers. In order to address this, the design documentation includes a "Bill of Materials" that can be used for retraining and upskilling, ensuring that the workforce is not displaced but rather transitions into higher-skilled roles in the hydrogen economy.

- *Inclusive Stakeholder Engagement*

  Aligned with EGBC's commitment to Equity, Diversity, and Inclusion (EDI), the project sought to consider the needs of diverse stakeholders, including pedestrians and affected properties near rail lines, by prioritizing noise reduction and emission-free operation in residential areas.

- *Respect for Indigenous Lands*

  As this project is part of a broader rail initiative in Canada, it acknowledges the ethical responsibility to respect the lands on which North American rail networks operate. The design contributes to "reconciliation through environmental stewardship" by providing a solution that cleans up traditional transport corridors without further land disturbance.

8.3 Accountability and User Privacy

Finally, for this sub-section we will analyse how our final design is related to EGBC Principle 12 and EGBC Principle 8. Principle 12 requires engineers to “Undertake work and documentation with due diligence and in accordance with any guidance developed to standardize professional documentation for the applicable profession” and Principle 8 requires engineers to “Avoid situations and circumstances in which there is a real or perceived conflict of interest and ensure conflicts of interest, including perceived conflicts of interest, are properly disclosed and necessary measures are taken so a conflict of interest does not bias decisions or recommendations.”

- *Sufficient Due Diligence*

  In order to meet the requirement for professional Due Diligence, the team did not rely solely on software simulations. We also conducted analytical verifications (hand calculations) to cross-check FEM and vibration results, ensuring that the structural integrity is supported by multiple layers of engineering proof.

- *Transparency in Assumptions*

  This final design report clearly distinguishes between facts such as tested material properties of 316 stainless steel and assumptions like the modeled rail jerk loads, providing a "justification section" for every major technical requirement. This transparency ensures that future engineers can accurately assess the design's limitations.

- *Safeguarding Proprietary Research*

  As this project utilizes research from the Hydrail initiative and Dr. Lovegrove, the team maintained strict confidentiality regarding the client's proprietary locomotive CAD models. Access to these digital assets was restricted to authorized team members, fulfilling our ethical duty as "faithful agents" of our client.

- *Data Minimization and Privacy*

  While the cradle utilizes sensors for passive monitoring (shocks and leaks), the ethical design decision was made to minimize data collection. The system is designed to transmit only safety-critical alerts (for instance:leak detected) rather than tracking location or continuous audio, thereby protecting the privacy of rail operators and surrounding communities from unnecessary surveillance.

9.0 Project Success Analysis

The success of the Hydrogen Tank Cradle is defined by its ability to provide a feasible and safe solution within the limits. This section reflects on how the final design aligns with the client's original vision.

9.1 Objective Alignment

The project's primary success lies in its adherence to the basic functional requirements. The client required a system capable of storing 60kg of hydrogen. By selecting 8 Type IV tanks, we maximized fuel density. In addition to that, we verified the 7g shock load criteria by FEA. Furthermore, the selection of 316 Stainless Steel guarantees the cradle remains durable against hydrogen embrittlement and severe Canadian winters.

9.2 Reflection on Design Trade-offs

Throughout our engagement with the client, several specifications had to be adjusted to ensure the safety and capacity goals. The client initially desired a universal cradle but the unique cowling dimensions required a bespoke layout. The height of the cradle exceeded the initial dimensions which was not ideal for modularity. Also, a key obstacle was the packing density. While we integrated removable brackets to facilitate tank replacement, the internal tooling envelope is tighter than the initial idea. This trade-off was necessary to maintain structural rigidity, but it remains a point of future optimization. Another priority was to reduce market barriers. Combination of off-the-shelf tanks and custom-engineered

mountings, created a solution that is ready for immediate prototyping. Nevertheless, the project cost currently sits near the client's upper limit. We prioritized safety and longevity while considering the cost.

9.3 Future Insights

This project provided profound insights into Iterative Integration, supply chain and refining the vision. We learned that manufacturability must be considered earlier in the CAD phase. In future projects, we would implement Design for Assembly (DFA) studies to ensure that tool accessibility is optimized. Another obstacle was the limited response from tank vendors. This taught that building a design that is flexible enough to accommodate multiple suppliers is challenging. Finally, this project proved that retrofitting is not just a mechanical challenge, but a logistical one. The 15-day manufacturing target is an aggressive benchmark that has impacted our thinking toward standardized parts. Furthermore, we will optimize material use, ensuring we bring the total investment well below the client's upper limit. Overall, Group F8 has delivered a design that provides a clear roadmap for the future of sustainable heavy transport.

10.0 References

[1] Environment and Climate Change Canada. (2025). *Canadian environmental sustainability indicators: Greenhouse gas emissions* (Cat. No. En4-144/18-2025E-PDF). Government of Canada. ISBN 978-0-660-75337-9.

[2] Locomotive Emissions Monitoring / Report. (2023). Railway Association of Canada. https://www.railcan.ca/wp-content/uploads/2025/09/SPARK-RAC-LEM-2023-EN.pdf

[3] Feng, H., Yang, C., Liu, Z., Zhan, H., & Deng, G. (2025). *Failure mode determination of large capacity type IV hydrogen storage cylinders*. International Journal of Hydrogen Energy, 176, 150842. https://doi.org/10.1016/j.ijhydene.2025.150842

[4] Coskun, T., & Sahin, O. S. (2024). *Modal and random vibration responses of composite overwrapped pressure vessels with various geodesic dome trajectories*. Journal of Reinforced Plastics and Composites, 44(17–18), 1343–1356. https://doi.org/10.1177/07316844241241567

[5] Lee, A. J., Woods, S. (2016). *Hydrogen embrittlement*. NASA Technical Reports. NASA/TM-2016-218602. https://ntrs.nasa.gov/citations/20160005654

[6] Lovegrove, G., & Hegazi, M. (n.d.). *Sustainable & Zero-Emission Rail Technology.* The University of British Columbia, Okanagan Campus. https://sustainablecommunities.ok.ubc.ca/research/sustainable-zero-emissionrail-technology

[7] Ding, D., Xiao, Y. (2024). *Hydrogen fuel cell electric trains: Technologies, current status, and future*. Science Direct. https://doi.org/10.1016/j.jaecs.2024.100255

[8] HYDAC International. (2024). *Mounting hydrogen tanks securely – with the world's first smart band strap*.HYDAC.https://www.hydac.com/en-ca/mounting-hydrogen-tanks-securely-with-the-worlds-first-smart-band-strap/gid/121605/gallery-detail/

[9] UN Global Technical Regulation No. 13 United Nations Economic Commission for Europe. (2013). *Global technical regulation No. 13 on hydrogen and fuel cell vehicles* (ECE/TRANS/180/Add.13). https://www.mlit.go.jp/jidosha/un/UN_gtr013.pdf

[10] HySafe Conference Paper Nguyen, N., & Gambone, L. (2019). *Hydrogen and fuel cell vehicles UN global technical regulation No. 13: Latest updates reflecting heavy duty vehicles* [Paper presentation]. International Conference on Hydrogen Safety (ICHS 2019), Adelaide, Australia. https://hysafe.info/uploads/papers/2019/281.pdf

[11] GlobalAutoRegs (UN Regulation No. 134) GlobalAutoRegs. (n.d.). *UN Regulation No. 134: Hydrogen fuel cell vehicle safety*. https://globalautoregs.com/rules/195

[12] NHTSA Proposed Rule National Highway Traffic Safety Administration. (2024). *Federal motor vehicle safety standards; Fuel system integrity of hydrogen vehicles; Compressed hydrogen storage system integrity* (NPRM, Docket No. NHTSA-2024-0023). U.S. Department of Transportation. https://www.nhtsa.gov/sites/nhtsa.gov/files/2024-04/FMVSS-307-and-308-NPRM-Web-Version.pdf

[13] Argonne National Laboratory Report Argonne National Laboratory. (2011). *Technical assessment of compressed hydrogen storage tank systems for automotive applications* (Report No. ANL/ESD/10-24). U.S. Department of Energy. https://publications.anl.gov/anlpubs/2011/02/68305.pdf

[14] ResearchGate (Sandia Paper) San Marchi, C., & Somerday, B. P. (2014, July). *Comparison of stainless steels for high-pressure hydrogen service*. Paper presented at the ASME 2014 Pressure Vessels and Piping Conference, Anaheim, California. https://www.researchgate.net/publication/287309174_Comparison_of_Stainless_Steels_for_High-Pressure_Hydrogen_Service

[15] Terra Universal Blog Terra Universal. (n.d.). *304 vs 316 vs 304L vs 316L stainless steel for cleanroom equipment*. https://www.terrauniversal.com/blog/304L-vs-316L-cleanroom-stainless-steel-differences-advantages-benefits

[16] Winsen ZC61 Product Page Winsen. (n.d.). *ZC61 hydrogen detection module* [Product page]. https://www.winsen-sensor.com/product/zc61.html

[17] The Hydrogen Energy Article The Hydrogen Energy. (n.d.). *Hydrogen sensors, detectors: Specifications, parameters, performance & more*. https://thehydrogen.energy/rd/hydrogen-sensors-detectors-specifications-parameters-performance-and-more/

[18] Yamaha Fine Technologies Product Yamaha Fine Technologies. (n.d.). *Hydrogen leak detector YHLD-100*. https://www.yamahafinetech.co.jp/en/fa_products/h_leakdetector/

[19] OSTI Technical Report Schefer, R. W. (2007). *Flammability limits of hydrogen/air mixtures* (Report No. SAND2007-5183C). Sandia National Laboratories. https://www.osti.gov/servlets/purl/1721461

[20] Winsen Knowledge Article Winsen. (n.d.). *Electrochemical hydrogen sensors: Principles, applications, and advantages*. https://www.winsen-sensor.com/knowledge/hydrogen-sensor.html

[21] Mahytec Datasheet Mahytec. (n.d.). *RGV500 hydrogen tank 500 bar* [Data sheet]. https://www.mahytec.com/wp-content/uploads/2021/07/CL-DS7-Data-Sheet_500bar-EN.pdf

[22] SIST EN 12663 Standard Slovenian Institute for Standardization. (2024). *Railway applications - Structural requirements of railway vehicle bodies - Part 1: Locomotives and passenger rolling stock* (SIST EN 12663-1:2010+A2:2024). https://cdn.standards.iteh.ai/samples/78424/573fac961d0343c6a6170594ef867eb2/SIST-EN-12663-1-2010-A2-2024.pdf

[23] San Marchi, C., & Somerday, B. P. (2005, March 17). Austenitic stainless steels: Type 316 (code 2103) (Technical Reference on Hydrogen Compatibility of Materials). Sandia National Laboratories. https://www.sandia.gov/app/uploads/sites/158/2021/12/2103TechRef_316SS.pdf

[24] San Marchi, C., & Somerday, B. P. (2005, May 16). Austenitic stainless steels: Type 304 & 304L (code 2101) (Technical Reference on Hydrogen Compatibility of Materials). Sandia National Laboratories. https://www.sandia.gov/app/uploads/sites/158/2021/12/2101TechRef_304SS.pdf

[25] Tavares, S. S. M., Terra, J. L., de Almeida, L. H., & de Amorim, J. N. (2009). Hydrogen effects on the properties of a 304L austenitic stainless steel. Materials Science and Engineering: A, 517(1-2), 129–134. https://doi.org/10.1016/j.msea.2009.03.041

[26] Oliveira, F. J. G., Cristovão, L. M., Fernandes, C. M., & Rocha, L. A. (2021). Corrosion of 316L stainless steel in GaInSn: Influence of temperature and oxygen concentration. HAL Open Science. https://hal.science/hal-03448780v1/file/316L-GaIn_v3_FormatCorrosionScience_v2.pdf

[27] Wetegrove, M., Duarte, M. J., Taube, K., Rohloff, M., Gopalan, H., Scheu, C., Dehm, G., & Kruth, A. (2023). Preventing hydrogen embrittlement: The role of barrier coatings for the hydrogen economy. Hydrogen, 4(2), 307–322. https://doi.org/10.3390/hydrogen4020022

[28] Kim, H.., Popov, N. B., & Chen, S. K. (2003). Comparison of corrosion-resistance and hydrogen permeation properties of Zn–Ni, Zn–Ni–Cd and Cd coatings on low-carbon steel. Corrosion Science, 45(1), 1505–1521. https://doi.org/10.1016/S0010-938X(02)00228-7

[29] Chen, T. C., Hsieh, C. T., & Tsay, L. W. (2013). Fatigue crack growth of cold worked 304L stainless steel in gaseous hydrogen. Applied Mechanics and Materials, 378, 140–144. https://doi.org/10.4028/www.scientific.net/AMM.378.140

[30] American Biltrite. (n.d.). Ethylene propylene diene (EPDM) - Sheet rubber. Retrieved April 1, 2026, from https://www.american-biltrite.com/rubber/products/sheet-rubber/ethylene-propylene-diene-epdm/

[31] Greene Tweed. (2019, May). EPDM 954 sealing solutions: Typical properties (Technical Data Sheet 05/19-ST DS-US-GE-078). https://www.gtweed.com/wp-content/uploads/2020/10/epdm-954-as-tp.pdf

[32] Aalco - Ferrous and Non-Ferrous Metals Stockist. (2020, October 16). *Grade 316 stainless steel: Properties, fabrication and applications*. AZoM. https://www.azom.com/article.aspx?ArticleID=2868

[33] Engineers and Geoscientists British Columbia (2018), *Code of Ethics,*https://www.egbc.ca/complaints-discipline/code-of-ethics/code-of-ethics

[34] Engineers and Geoscientists British Columbia (2021, Mar), *Guide to the Code of Ethics,*https://www.egbc.ca/getmedia/33d03861-5d04-43e9-b76b-ff57ba8b9bdb/EGBC-Guide-to-the-Code-of-Ethics-V2-0.pdf

Appendix

Appendix A - Team Contribution

Name	Contribution
Johannes Galan	16.67%
Baran Hosal	16.67%
Divyam Khubar	16.67%
Jasper Palmer	16.67%
Narendra Singh	16.67%
Tristan Wolf	16.67%

Appendix B - Financial Summary

Cost Item	Notes / Specification	Qty	Cost/Pc	Cost (CAD)
Concrete Anchors	*Structural anchoring hardware*	1	N/A	$347.49
Acceleration Sensors	*Vibration / motion monitoring sensors*	8	~$85.29	$682.320
Hydrogen Leak Sensor	*Safety detection sensor*	1	634.77	$634.77
M12 304 A2-70 Bolts (100mm)	*Stainless A2-70 grade*	94	$2.23	$209.62
Frame Assembly	*Fabricated structural frame, all components*	~27 meters	$209.82/meter	~$6,514.91
Hexagon Purus H2 Tanks	*Type IV composite cylinders, Part# H2-35-430X3202*	8	$13,587.25	$108,698.00
Straps with Base Plates	*Mounting straps with base from hydac. Model HRVMW 4 R 430-441/438 ST*	19	$222.69	$4273.50
TOTAL PROJECT COST				**$121,360.61**

Appendix B.1: Accelerometer Cost

Items (8):	$609.20
Shipping & Handling:	$0.00
Estimated GST/HST:	$30.48
Estimated PST/RST/QST:	$42.64
Order Total:	**$682.32**

Link:https://www.amazon.ca/WitMotion-high-Stability-WTVB01-485-Measurement-Displacement/dp/B0BXSQYLQW/ref=pd_ci_mcx_mh_mcx_views_0_image?pd_rd_w=yXWxL&con

tent-id=amzn1.sym.a6222432-b80a-416c-8131-3f90f9db32fd%3Aamzn1.symc.c3d5766d-b606-46b8-ab07-1d9d1da0638a&pf_rd_p=a6222432-b80a-416c-8131-3f90f9db32fd&pf_rd_r=1WH4FBAF291EK8YX908T&pd_rd_wg=ZLryR&pd_rd_r=3213b8b9-e1ac-4687-8ed2-8830fb70e565&pd_rd_i=B0BXSQYLQW

Appendix B.2: Hydrogen Sensor Cost (Sisco)

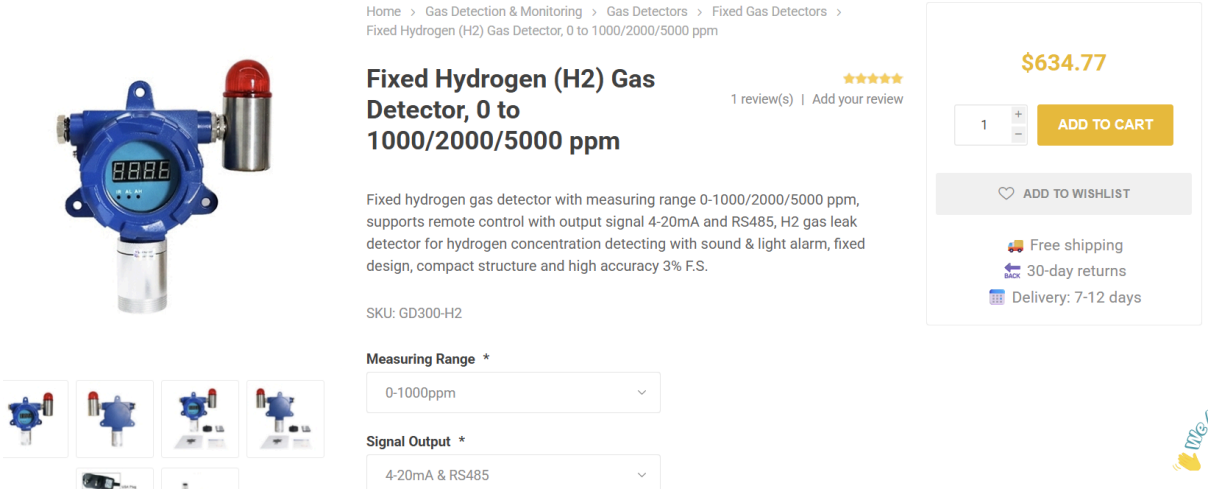

Link:https://www.sisco.com/fixed-h2-gas-detector?affiliate=ads&gad_source=1&gad_campaignid=20711231717&gbraid=0AAAAAp_4mtL7p2mUfF5xk07vMBdHniU21&gclid=Cj0KCQiA1JLLBhCDARIsAAVfy7hKnuG1c-Z7NqNk6i1EwVxfTWq7dWnLgeMqKxmP4BjkNp0oajagMswaAnSzEALw_wcB

Appendix B.3: Hydac Straps Quote

MiMOTION

Quote

MOTION CANADA
1405 RIVER STREET
KAMLOOPS, BC V2C 1Z1
PHONE : 2503729518
FAX : 2503728188

Date: 02/19/26

Note: Due to recent volatility of raw materials, price and delivery are subject to change based on availability at time of order.

Requests for statutory and regulatory documentation (REACH, RoHS, California Prop 65, Conflict Minerals, Certificates of Conformance, Safety Data Sheets, and other applicable compliance documents) for the product(s) in this order must be communicated by the customer to the Motion Industries, Inc. sales representative at the time the order is placed. Motion Industries, Inc. cannot accept requests for these documents after completion of the sale.

To:
STRIPE CREDIT CARD
KAMLOOPS
1405 RIVER STREET
KAMLOOPS, BC V2C 1Z1
PO: 514-297-2831 DIVYAM

SPECIAL ORDER ITEMS ARE NON-RETURNABLE

CUST.PICK-UP BRANCH

Quote Number:	BC68 - 0000229522
Customer RFQ:	514-297-2831 DIVYAM
FOB:	FOB ORG,FRT COLLECT
Quote Placed By:	DIVYAM
Order Sent By:	ERICA
Payment Terms:	. CREDIT CARD

Description	Manufacturer	Quantity	Unit	Unit Price	Amount
LINE ITEM: 002					
HRVMW 4 R 430-441/438 F1 ZN SWIVEL BOLT		36	EA	$198.600	$7,149.60
CLAMP **HYDAC PN: 4605106**					
ITEM NO: 99999999	HYDACCORP				
		Expected Date:			
FREIGHT: 80.00					
*					
AN ESTIMATED 12-14 WEEKS TO ONTARIO					
*					
PLUS 1 WEEK TRANSIT TO KAMLOOPS					
*					
$80.00 FREIGHT TO BRING IN					
**********					
SPECIAL ORDER					
NON-CANCELLABLE/NON-RETURNABLE					
**********					

BUYER UNDERSTANDS AND AGREES THAT GOODS PRESENTED TO BUYER PURSUANT TO THIS INVOICE ARE BEING TENDERED CONTINGENT UPON BUYER'S AGREEMENT TO ALL OF MOTION'S TERMS AND CONDITIONS RELATED TO SALES. MOTION'S TERMS AND CONDITIONS ARE AVAILABLE AT THE MOTION BRANCH OR AT WWW.MOTION.COM. BUYER'S ACCEPTANCE OF THE DELIVERY OF THE GOODS SHALL CONFIRM BUYER'S AGREEMENT TO ALL OF MOTION'S TERMS AND CONDITIONS.

PAGE 1 of 2 OCN: BC68 - 0000229522 PO: 514-297-2831 DIVYAM 02/26/26

Description	Manufacturer	Quantity	Unit	Unit Price	Amount
				SUB TOTAL:	$7,149.60
				FREIGHT:	$80.00
				GST.....10398 7889 RT0001	$361.48
				PST.....BC# 1001-2397	$506.07
				TOTAL: CAD	$8,097.15

Note: While the quote was for 36 straps initially, we opted for 19 following our strap performance data. This would cut the cost down to **$4,311.27** including tax and freight for $222.69/strap.

Appendix B.4: Frame Quote (Metal Super Market)

	Qty	Length	Unit	Unit Price $	Dimension	Total $
Stainless Square Tube 316 Mill Finish 3.000 X 3.000 X 0.120						
	30	72.5	IN	5.32946	30 @ 72.5 IN	11,591.57
Lead time 7-14 days						
Stainless Square Tube 304 Mill Finish 3.000 X 3.000 X 0.120						
	30	72.5	IN	2.44197	30 @ 72.5 IN	5,311.28
Lead time 3-5 days						

Note: This quote is for the first design for the rigid frame before the trims and adjustments to the middle row.

Following these changes the cost can be computed by converting $/In to $/m by applying an adjustment factor of 1in/0.0254m. The unit price then changes to $209.821/m for 316 Steel and $96.14055/m. The results are summarized in the table below.

Material	Length	Cost before tax	Cost Incl tax (~15%)
316	27	$5,665.17	$6,500
310	27	$2,595.79	~$3,000

Appendix B.5: Tank Quote (Hexagon Purus)

Here's the Type IV cylinders we offer in Noth America.

Mobility
Hydrogen high-pressure Type 4 cylinders

Nominal working pressure (15°C)		Outside diameter	Overall length	Cylinder weight	Water volume	Hydrogen capacity	Weight ratio (hydrogen weight/ cylinder weight)	Approval
Reference	Bar	mm	mm	kg	L	kg	%	
Mobility								
H2-35-431X2114	350	431	2,114	67	194	4.7	7.1	EC79/HGV2
H2-35-430X3202	350	430	3,202	101	312	7.5	7.4	EC79/HGV2

Budgetary for the shorter length (2114mm) cylinder is ~$7,500 USD each. The longer length (3202mm) is ~$8,500 USD each.

Note: Cost did not include tax and currency conversions therefore, an adjustment of 1.15 was applied for tax and 1.39 for USD to CAD to each tank. We did not include shipping as the cost was not provided by the supplier and it does vary, as well the tariffs on this product is unknown. Thus the cost comes out to $13,587.25x8= $108,698.

Appendix B.6: Bolts and Nuts quote

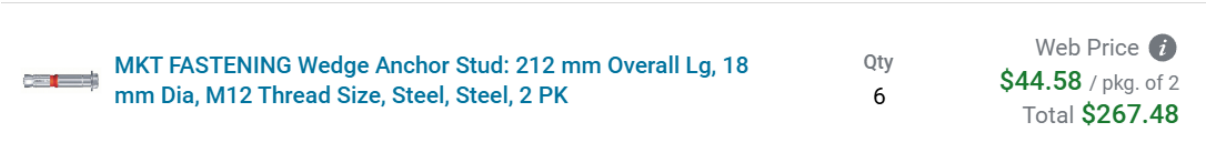

MKT FASTENING Wedge Anchor Stud: 212 mm Overall Lg, 18 mm Dia, M12 Thread Size, Steel, Steel, 2 PK	Qty 6	Web Price $44.58 / pkg. of 2 Total $267.48

Figure B.6.1 - M12 Concrete Anchors to connect the beam to the concrete base inside the cowling of the locomotive

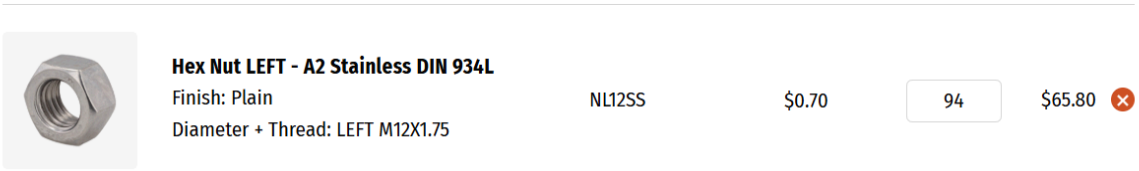

Hex Nut LEFT - A2 Stainless DIN 934L Finish: Plain Diameter + Thread: LEFT M12X1.75	NL12SS	$0.70	94	$65.80

Figure B.6.2 - M12 x 1.75 Hex Nut used to secure both the frames and the Hydac Mounts to the frames

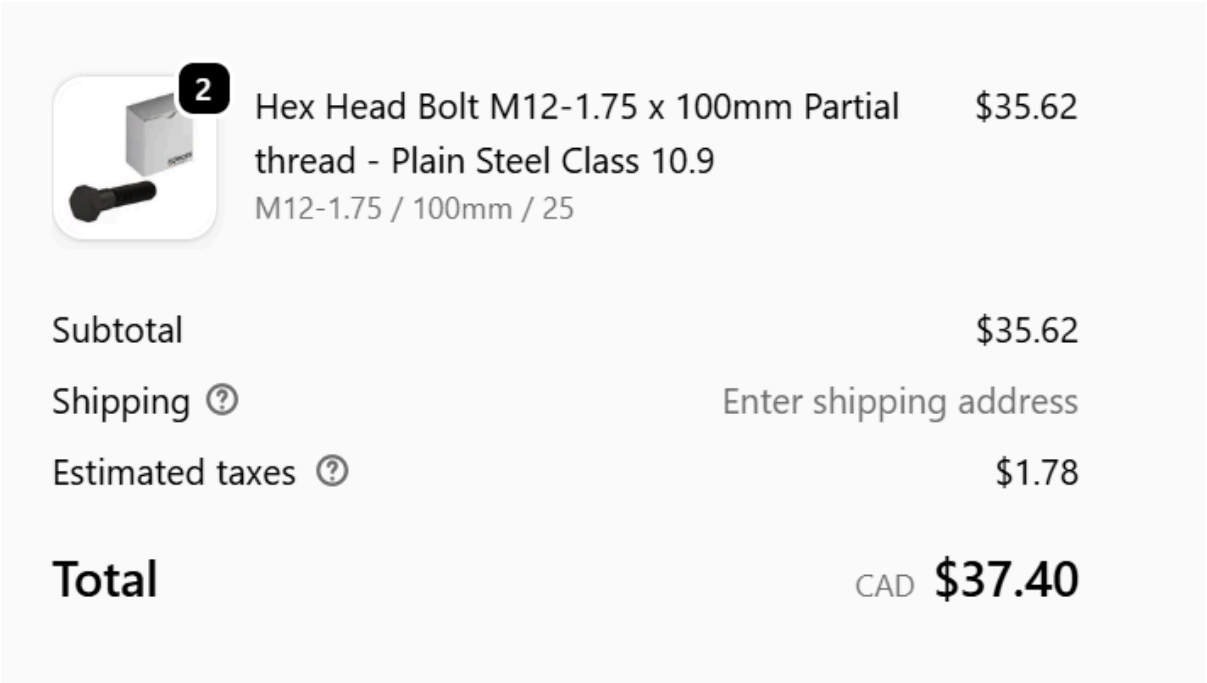

2 Hex Head Bolt M12-1.75 x 100mm Partial thread - Plain Steel Class 10.9 M12-1.75 / 100mm / 25	$35.62
Subtotal	$35.62
Shipping	Enter shipping address
Estimated taxes	$1.78
Total	CAD **$37.40**

Figure B.6.3 - Screws used to attach the Hydac Mounts to the frames

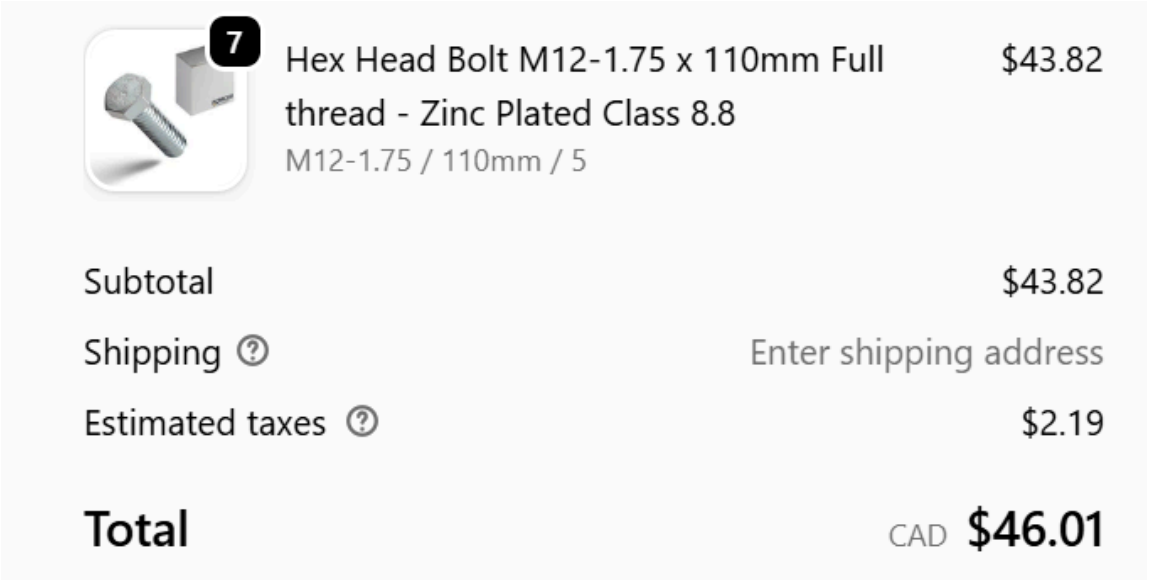

Figure B.6.4 - Screws used to attach the Diagonal Braces to the frames

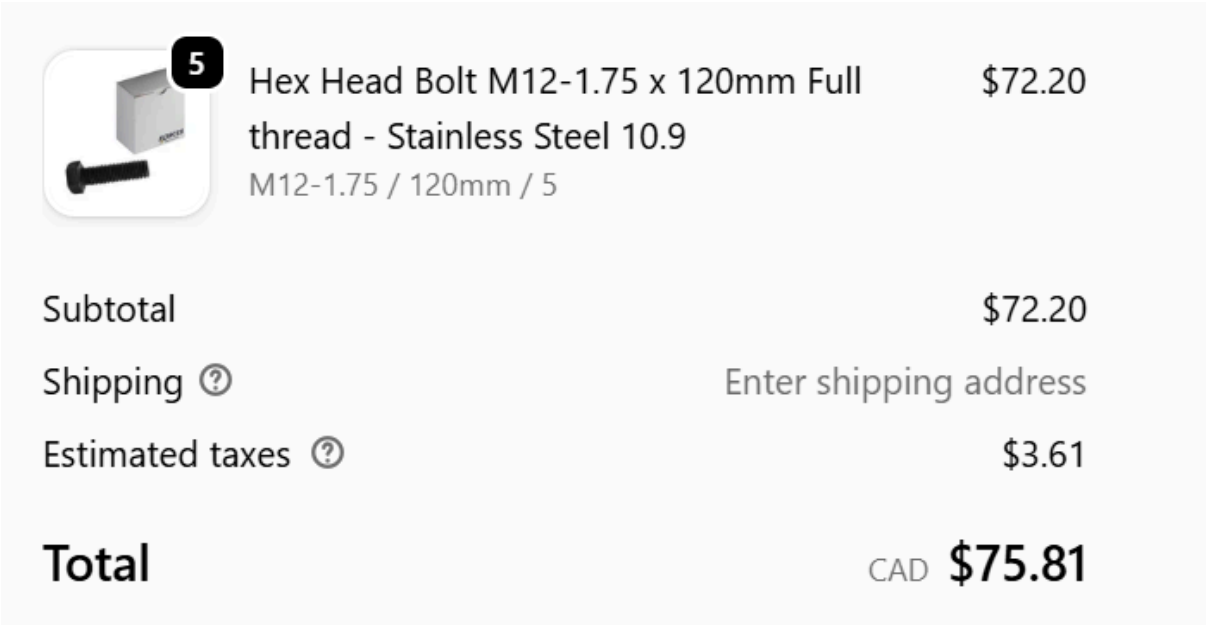

Figure B.6.5 - Screws used to attahc the Gussett Plates to the frame

Appendix C - MATLAB Scripts

Appendix C.1 - Longitudinal FEM Analysis

```
%% 2D Frame FEM Solver
%————————————————————————————————————————————————————————————————————————
%Basic FEM 2D frame solver developed to analyze the performance of a frame
%carrying hydrogen tanks. Part of the capstone project for group F8.
%————————————————————————————————————————————————————————————————————————
clear; clc; close all;
%% Input values for material and specs
g = 9.81; %Gravity (m/s^2)
shock = 7; %Specified shock
tank_mass = 101; %Mass (kg)
number_tanks = 5; %Number of tanks on top portion of frame
total_tankF = tank_mass*number_tanks*g*shock; %Total instantaneous force from
shock (N)
E = 190e9; %Young's modulus (Pa)
A = 0.00167; %Cross-sectional area (m^2)
Lout = 0.0762; %Outer wall length (m)
Lin = 0.0635; %Inner wall length (m)
I = (Lout^4-Lin^4)/12; %Area moment of inertia (m^4)
EA = E * A; %Axial rigidity
EI = E * I; %Bending rigidity
Sy = 205e9; %Yield strength (Pa)
%% Defining nodal geometry (nodal positions in m)
nodes = [
   0.0, 0.0;  % Node 1
   1.0973, 0.0;  % Node 2
   2.1946, 0.0;  % Node 3
   0.0, 1.12121;  % Node 4
   1.0973, 1.12121;  % Node 5
   2.1946, 1.12121;  % Node 6
];
numNodes = size(nodes, 1);
totalDOFs = numNodes * 3; %3 DOFs: x,y,theta
%% Defining the elements in the system
elements = [
   1, 2; 2, 3; 3, 6; 6, 5; 5, 4; 4, 1; %Outer frame
   2, 5; %Vertical support
   1, 5; 5, 3; %Diagonal support
];
numElements = size(elements, 1);
%% Initiallizing matrices
K = zeros(totalDOFs, totalDOFs); %Global stiffness matrix
F = zeros(totalDOFs, 1); %Global force vector
U = zeros(totalDOFs, 1); %Global displacement vector
%% Global matrix defninition
for e = 1:numElements
   %Finding element nodal connectivity
   n1 = elements(e, 1);
   n2 = elements(e, 2);
   %Finding element nodal position
   x1 = nodes(n1, 1);
   y1 = nodes(n1, 2);
   x2 = nodes(n2, 1);
   y2 = nodes(n2, 2);
```

```
   L = sqrt((x2 - x1)^2 + (y2 - y1)^2); %Finding length of the element
   c = (x2 - x1) / L; %This finds cos(theta) which is needed for the
transformation matrix
   s = (y2 - y1) / L; %This finds sin(theta) ''

   %Standard local stiffness matrix for a 2D beam problem
   k_local_prime = [
       EA/L, 0,           0,          -EA/L, 0,           0;
       0,    12*EI/L^3,   6*EI/L^2,    0,   -12*EI/L^3,   6*EI/L^2;
       0,    6*EI/L^2,    4*EI/L,      0,   -6*EI/L^2,    2*EI/L;
      -EA/L, 0,           0,           EA/L, 0,           0;
       0,   -12*EI/L^3,  -6*EI/L^2,    0,    12*EI/L^3,  -6*EI/L^2;
       0,    6*EI/L^2,    2*EI/L,      0,   -6*EI/L^2,    4*EI/L
   ];

   %Transformation matrix using c and s found above to account for
   %diagonal beams
   T = [
       c,  s, 0,  0,  0, 0;
      -s,  c, 0,  0,  0, 0;
       0,  0, 1,  0,  0, 0;
       0,  0, 0,  c,  s, 0;
       0,  0, 0, -s,  c, 0;
       0,  0, 0,  0,  0, 1
   ];

   %Rotating the system properly into the global matrix
   k_global = T' * k_local_prime * T;

   %Mapping DOFs
   %3n-2 for x, 3n-1 for y and 3n for theta
   dofs = [3*n1-2, 3*n1-1, 3*n1, 3*n2-2, 3*n2-1, 3*n2];

   %Adding the created local matrix into the global matrix
   K(dofs, dofs) = K(dofs, dofs) + k_global;
end
%% Applying loads and boundary conditions
%Force on node 4 [(3*4)-2 = 10]
F(10) = total_tankF/4;
%Force on node 6 [(3*6)-2 = 16]
F(16) = total_tankF/4;
%Bottom of the frame is fixed so DOFs 1-9 are fixed (3 nodes*3 DOFs = 9)
fixedDOFs = 1:9;
freeDOFs = setdiff(1:totalDOFs, fixedDOFs); %Using setdiff to remove fixed nodes
K_reduced = K(freeDOFs, freeDOFs); %Reducing matrices knowing which DOFs using
the freeDOFs found above
F_reduced = F(freeDOFs);
%% Soling the system
U_reduced = K_reduced \ F_reduced; %Matrix division to solve
U(freeDOFs) = U_reduced; %Putting found values into a reduced matrix
disp('Nodal Displacements (u, v, theta):'); %Displaying results
disp(reshape(U, 3, numNodes)');
%% Force and stress calculation
disp('————————————————————————————————————————————————————————————————————')
;
disp(' Element | Axial (MPa) | Bending (MPa) | Max Combined (MPa) | FoS ');
```

```
disp('————————————————————————————————————————————————————————————————————————————')
;
%This loop follows a similar overall structure for indexing to the first loop
where we
%created the global matrix however this time it will calculate the desired
%values rather than assembel the matrix
axial_forces = zeros(numElements, 1); %Initalizing force vector
for e = 1:numElements
   %Finding elements nodes
   n1 = elements(e, 1);
   n2 = elements(e, 2);
   %Finding nodal locations
   x1 = nodes(n1, 1); y1 = nodes(n1, 2);
   x2 = nodes(n2, 1); y2 = nodes(n2, 2);
   %Finding length of the element
   L = sqrt((x2 - x1)^2 + (y2 - y1)^2);
   c = (x2 - x1) / L; %This finds cos(theta) which is needed for the
transformation matrix
   s = (y2 - y1) / L; %This finds sin(theta) ''

   %Getting the displacement for the 2 nodes (3n-2=x, 3n-1=y, 3n=theta)
   u_global = [U(3*n1-2); U(3*n1-1); U(3*n1); U(3*n2-2); U(3*n2-1); U(3*n2)];
   %Tranformation matrix to help translate the global portion of the
   %matrix back into the local coordinates
   T = [
       c,  s, 0,  0,  0, 0;
      -s,  c, 0,  0,  0, 0;
       0,  0, 1,  0,  0, 0;
       0,  0, 0,  c,  s, 0;
       0,  0, 0, -s,  c, 0;
       0,  0, 0,  0,  0, 1
   ];

   %Converting global displacement to local displacement
   u_local = T * u_global;
   %Local stiffness matrix
   k_local_prime = [
       EA/L, 0,           0,          -EA/L, 0,           0;
       0,    12*EI/L^3,   6*EI/L^2,    0,   -12*EI/L^3,   6*EI/L^2;
       0,    6*EI/L^2,    4*EI/L,      0,   -6*EI/L^2,    2*EI/L;
      -EA/L, 0,           0,           EA/L, 0,           0;
       0,   -12*EI/L^3,  -6*EI/L^2,    0,    12*EI/L^3,  -6*EI/L^2;
       0,    6*EI/L^2,    2*EI/L,      0,   -6*EI/L^2,    4*EI/L
   ];

   %Using the local stiffness matrix and local displacements we can find
   %local force
   f_local = k_local_prime * u_local;

   %Defining axial force at node 2 (in local system)
   %Due to the fact that the system is fully converted back into local
   %corrdinates x = pure axial force y = pure shear and theta = rotation
   axial_forces(e) = f_local(4);

   %Extracting bending moments for the element nodes
   M1 = f_local(3);
   M2 = f_local(6);
```

```
   %Finding max bending moment
   max_bending_moment = max(abs(M1), abs(M2));

   %Calculating axial stress (F/A)
   axial_stress = axial_forces(e) / A;
   %Calculating bending sress ((M*y)/I)
   bending_stress = (max_bending_moment * (Lout/2)) / I;

   %Finding max stress by adding both (need one term to add and one to
   %subtract in case there is a tension/compression mismatch
   max_tensile_stress = axial_stress + bending_stress;
   max_compressive_stress = axial_stress - bending_stress;

   %Finding the larger out of the previous 2 terms
   max_combined_stress = max(abs(max_tensile_stress),
abs(max_compressive_stress));

   %Finding factor of safety
   FoS = Sy / max_combined_stress;

   %Printing results in a table
   fprintf('    %2d    | %11.1f | %13.1f | %18.1f | %5.2f\n', ...
       e, axial_stress/1e6, bending_stress/1e6, max_combined_stress/1e6, FoS);
end
%% Plotting the frame and deformation
figure;
hold on;
grid on;
scaleFactor = 1000; %Scaling factor to make deformation noticable
%Extracting displacement values (taking every 3rd value from start point)
u_x = U(1:3:end);
u_y = U(2:3:end);
%Redifing the displaced nodal positions using the scaling factor
nodes_def = nodes + scaleFactor * [u_x, u_y];
for e = 1:numElements
   %Finding element nodes
   n1 = elements(e, 1);
   n2 = elements(e, 2);
   %Finding original nodal locations
   x_orig = [nodes(n1, 1), nodes(n2, 1)];
   y_orig = [nodes(n1, 2), nodes(n2, 2)];
   %Finding displaced nodal locations
   x_def = [nodes_def(n1, 1), nodes_def(n2, 1)];
   y_def = [nodes_def(n1, 2), nodes_def(n2, 2)];
   %Plotting original shape (HandleVisibility to not mess up legend)
   plot(x_orig, y_orig, '--', 'Color', 'm', 'LineWidth', 1, 'HandleVisibility',
'off');
   %If else chain to assign different colors to tension, compression and
   %zero force members
   if axial_forces(e) > 1e-1 %Tension
       color = 'b';
   elseif axial_forces(e) < -1e-1 %Compression
       color = 'r';
   else
       color = 'k'; %Zero force
   end
   %Plotting displaced shape
```

```
   plot(x_def, y_def, '-', 'Color', color, 'LineWidth', 2, 'HandleVisibility',
'off');
end
%Adding the correct information to our legend using NaN plots (which
%display nothing)
plot(NaN,NaN,'--','Color','m','LineWidth',1,'DisplayName','Original Shape');
plot(NaN,NaN,'-b','LineWidth',2,'DisplayName','Tension');
plot(NaN,NaN,'-r','LineWidth',2,'DisplayName','Compression');
plot(NaN,NaN,'-k','LineWidth',2,'DisplayName','Zero Axial Force');
legend('show', 'Location', 'northeast');
title('Frame Deformation (1000x Scaling Factor)');
xlabel('X Position (m)');
ylabel('Y Position (m)');
xlim([-0.1,3]);
axis equal;
hold off;
```

Appendix C.2 - Lateral FEM Analysis

```
%% 2D Frame FEM Solver
%-----------------------------------------------------------------------
%Basic FEM 2D frame solver developed to analyze the performance of a frame
%carrying hydrogen tanks. Part of the capstone project for group F8.
%-----------------------------------------------------------------------
clear; clc; close all;
%% Input values for material and specs
g = 9.81; %Gravity (m/s^2)
shock = 7; %Specified shock
tank_mass = 101; %Mass (kg)
number_tanks = 5; %Number of tanks on top portion of frame
total_tankF = tank_mass*number_tanks*g*shock; %Total instantaneous force from
shock (N)
E = 190e9; %Young's modulus (Pa)
A = 0.00167; %Cross-sectional area (m^2)
Lout = 0.0762; %Outer wall length (m)
Lin = 0.0635; %Inner wall length (m)
I = (Lout^4-Lin^4)/12; %Area moment of inertia (m^4)
EA = E * A; %Axial rigidity
EI = E * I; %Bending rigidity
Sy = 205e9; %Yield strength (Pa)
%Properties for diagonal supports
length = 0.44293; %Diagonal length (m)
base = 0.00635; %Thickness (m)
height = 0.1016; %Height (m)
A_diag = base*height; %Cross-sectional area (m^2)
I_diag = (base*height^3)/12; %Area moment of inertia (m^4)
I_diag = I_diag*2; %Multiplying by 2 to account for a plate of each side
%% Defining nodal geometry (nodal positions in m)
nodes = [
   0.0, 0.0;  % Node 1
   1.745, 0.0;  % Node 2
   0.0, 1.12121;  % Node 3
   1.745, 1.12121;  % Node 4
   0.0, 0.72721;  % Node 5
   0.394, 1.12121; % Node 6
   1.351, 1.12121; % Node 7
   1.745, 0.72721;  % Node 8
];
numNodes = size(nodes, 1);
totalDOFs = numNodes * 3; %3 DOFs: x,y,theta
%% Defining the elements in the system
elements = [
   1, 5; 5, 3; 3, 6; 6, 7; 7, 4; 4, 8; 8, 2; 2, 1; %Outer frame
   5, 6; 7, 8; %Diagonal support
];
numElements = size(elements, 1);
%% Initiallizing matrices
K = zeros(totalDOFs, totalDOFs); %Global stiffness matrix
F = zeros(totalDOFs, 1); %Global force vector
U = zeros(totalDOFs, 1); %Global displacement vector
%% Global matrix defninition
for e = 1:numElements
   %Finding element nodal connectivity
   n1 = elements(e, 1);
```

```
    n2 = elements(e, 2);
    %Finding element nodal position
    x1 = nodes(n1, 1);
    y1 = nodes(n1, 2);
    x2 = nodes(n2, 1);
    y2 = nodes(n2, 2);

    L = sqrt((x2 - x1)^2 + (y2 - y1)^2); %Finding length of the element
    c = (x2 - x1) / L; %This finds cos(theta) which is needed for the
transformation matrix
    s = (y2 - y1) / L; %This finds sin(theta) ''
    if e ≥ 9  % Elements 9 and 10 are the diagonals
        EA = E * A_diag;
        EI = E * I_diag;
    else       % Elements 1-8 are the outer frame
        EA = E * A;
        EI = E * I;
    end
    %Standard local stiffness matrix for a 2D beam problem
    k_local_prime = [
        EA/L, 0,           0,          -EA/L, 0,           0;
        0,    12*EI/L^3,   6*EI/L^2,    0,   -12*EI/L^3,   6*EI/L^2;
        0,    6*EI/L^2,    4*EI/L,      0,   -6*EI/L^2,    2*EI/L;
       -EA/L, 0,           0,           EA/L, 0,           0;
        0,   -12*EI/L^3,  -6*EI/L^2,    0,    12*EI/L^3,  -6*EI/L^2;
        0,    6*EI/L^2,    2*EI/L,      0,   -6*EI/L^2,    4*EI/L
    ];

    %Transformation matrix using c and s found above to account for
    %diagonal beams
    T = [
        c,  s, 0,  0,  0, 0;
       -s,  c, 0,  0,  0, 0;
        0,  0, 1,  0,  0, 0;
        0,  0, 0,  c,  s, 0;
        0,  0, 0, -s,  c, 0;
        0,  0, 0,  0,  0, 1
    ];

    %Rotating the system properly into the global matrix
    k_global = T' * k_local_prime * T;

    %Mapping DOFs
    %3n-2 for x, 3n-1 for y and 3n for theta
    dofs = [3*n1-2, 3*n1-1, 3*n1, 3*n2-2, 3*n2-1, 3*n2];

    %Adding the created local matrix into the global matrix
    K(dofs, dofs) = K(dofs, dofs) + k_global;
end
%% Applying loads and boundary conditions
%Force on node 3 [(3*3)-2 = 7]
F(7) = total_tankF/4;
%Force on node 4 [(3*4)-2 = 10]
F(10) = total_tankF/4;
%Bottom of the frame is fixed so DOFs 1-6 are fixed (3 nodes*2 DOFs = 6)
base_fixedDOFs = 1:6;
%These nodes represent where our diagonal supports connect to the frame,
%however since they connect to a bar we need to make sure these nodes are
```

```
%irrotational to the bar doesn't act as 2 seperate bars
non_rotationNodes = [5, 6, 7, 8];
non_rotationDOFS = 3*non_rotationNodes;
fixedDOFs = [base_fixedDOFs, non_rotationDOFS]; %Assigning all our fixed DOFs
freeDOFs = setdiff(1:totalDOFs, fixedDOFs); %Using setdiff to remove fixed nodes
K_reduced = K(freeDOFs, freeDOFs); %Reducing matrices knowing which DOFs using
the freeDOFs found above
F_reduced = F(freeDOFs);
%% Soling the system
U_reduced = K_reduced \ F_reduced; %Matrix division to solve
U(freeDOFs) = U_reduced; %Putting found values into a reduced matrix
disp('Nodal Displacements (u, v, theta):'); %Displaying results
disp(reshape(U, 3, numNodes)');
%% Force and stress calculation
disp('────────────────────────────────────────────────────────────────────────')
;
disp(' Element | Axial (MPa) | Bending (MPa) | Max Combined (MPa) | FoS ');
disp('────────────────────────────────────────────────────────────────────────')
;
%This loop follows a similar overall structure for indexing to the first loop
where we
%created the global matrix however this time it will calculate the desired
%values rather than assembel the matrix
axial_forces = zeros(numElements, 1); %Initalizing force vector
for e = 1:numElements
   %Finding elements nodes
   n1 = elements(e, 1);
   n2 = elements(e, 2);
   %Finding nodal locations
   x1 = nodes(n1, 1); y1 = nodes(n1, 2);
   x2 = nodes(n2, 1); y2 = nodes(n2, 2);
   %Finding length of the element
   L = sqrt((x2 - x1)^2 + (y2 - y1)^2);
   c = (x2 - x1) / L; %This finds cos(theta) which is needed for the
transformation matrix
   s = (y2 - y1) / L; %This finds sin(theta) ''

   %Getting the displacement for the 2 nodes (3n-2=x, 3n-1=y, 3n=theta)
   u_global = [U(3*n1-2); U(3*n1-1); U(3*n1); U(3*n2-2); U(3*n2-1); U(3*n2)];
   %Tranformation matrix to help translate the global portion of the
   %matrix back into the local coordinates
   T = [
       c,  s, 0,  0,  0, 0;
      -s,  c, 0,  0,  0, 0;
       0,  0, 1,  0,  0, 0;
       0,  0, 0,  c,  s, 0;
       0,  0, 0, -s,  c, 0;
       0,  0, 0,  0,  0, 1
   ];

   %Converting global displacement to local displacement
   u_local = T * u_global;
   if e ≥ 9  % Elements 9 and 10 are the diagonals
       EA = E * A_diag;
       EI = E * I_diag;
   else       % Elements 1-8 are the outer frame
       EA = E * A;
       EI = E * I;
```

```
    end
    %Local stiffness matrix
    k_local_prime = [
        EA/L, 0,           0,           -EA/L, 0,           0;
        0,    12*EI/L^3,   6*EI/L^2,    0,   -12*EI/L^3,   6*EI/L^2;
        0,    6*EI/L^2,    4*EI/L,      0,   -6*EI/L^2,    2*EI/L;
       -EA/L, 0,           0,           EA/L, 0,           0;
        0,   -12*EI/L^3,  -6*EI/L^2,    0,    12*EI/L^3,  -6*EI/L^2;
        0,    6*EI/L^2,    2*EI/L,      0,   -6*EI/L^2,    4*EI/L
    ];
    if e ≥ 9
        A_loop = A_diag;
        I_loop = I_diag;
        L_loop = height; % Distance to extreme fiber for bending stress
    else
        A_loop = A;
        I_loop = I;
        L_loop = Lout;
    end
    %Using the local stiffness matrix and local displacements we can find
    %local force
    f_local = k_local_prime * u_local;

    %Defining axial force at node 2 (in local system)
    %Due to the fact that the system is fully converted back into local
    %corrdinates x = pure axial force y = pure shear and theta = rotation
    axial_forces(e) = f_local(4);

    %Extracting bending moments for the element nodes
    M1 = f_local(3);
    M2 = f_local(6);

    %Finding max bending moment
    max_bending_moment = max(abs(M1), abs(M2));

    %Calculating axial stress (F/A)
    axial_stress = axial_forces(e) / A_loop;
    %Calculating bending sress ((M*y)/I)
    bending_stress = (max_bending_moment * (L_loop/2)) / I_loop;

    %Finding max stress by adding both (need one term to add and one to
    %subtract in case there is a tension/compression mismatch
    max_tensile_stress = axial_stress + bending_stress;
    max_compressive_stress = axial_stress - bending_stress;

    %Finding the larger out of the previous 2 terms
    max_combined_stress = max(abs(max_tensile_stress),
abs(max_compressive_stress));

    %Finding factor of safety
    FoS = Sy / max_combined_stress;

    %Printing results in a table
    fprintf('    %2d    | %11.1f | %13.1f | %18.1f | %5.2f\n', ...
        e, axial_stress/1e6, bending_stress/1e6, max_combined_stress/1e6, FoS);
end
%% Plotting the frame and deformation
figure;
```

```
hold on;
grid on;
scaleFactor = 100; %Scaling factor to make deformation noticable
%Extracting displacement values (taking every 3rd value from start point)
u_x = U(1:3:end);
u_y = U(2:3:end);
%Redifing the displaced nodal positions using the scaling factor
nodes_def = nodes + scaleFactor * [u_x, u_y];
for e = 1:numElements
   %Finding element nodes
   n1 = elements(e, 1);
   n2 = elements(e, 2);
   %Finding original nodal locations
   x_orig = [nodes(n1, 1), nodes(n2, 1)];
   y_orig = [nodes(n1, 2), nodes(n2, 2)];
   %Finding displaced nodal locations
   x_def = [nodes_def(n1, 1), nodes_def(n2, 1)];
   y_def = [nodes_def(n1, 2), nodes_def(n2, 2)];
   %Plotting original shape (HandleVisibility to not mess up legend)
   plot(x_orig, y_orig, '--', 'Color', 'm', 'LineWidth', 1, 'HandleVisibility',
'off');
   %If else chain to assign different colors to tension, compression and
   %zero force members
   if axial_forces(e) > 1e-1 %Tension
       color = 'b';
   elseif axial_forces(e) < -1e-1 %Compression
       color = 'r';
   else
       color = 'k'; %Zero force
   end
   %Plotting displaced shape
   plot(x_def, y_def, '-', 'Color', color, 'LineWidth', 2, 'HandleVisibility',
'off');
end
%Adding the correct information to our legend using NaN plots (which
%display nothing)
plot(NaN,NaN,'--','Color','m','LineWidth',1,'DisplayName','Original Shape');
plot(NaN,NaN,'-b','LineWidth',2,'DisplayName','Tension');
plot(NaN,NaN,'-r','LineWidth',2,'DisplayName','Compression');
plot(NaN,NaN,'-k','LineWidth',2,'DisplayName','Zero Axial Force');
legend('show', 'Location', 'northeast');
title('Frame Deformation (100x Scaling Factor)');
xlabel('X Position (m)');
ylabel('Y Position (m)');
xlim([-0.1,2]);
axis equal;
hold off;
```

Appendix C.3 - Wedge Anchor Code

```
%%Hydrogen Cradle Concrete Fastener Calculations
clear; clc; close all;
%Input Values
Wout = 0.0762; %Exterior bar width [m]
Win = 0.0635; %Interior bar width [m]
l = 27; %Length of bar [m]
A = Wout^2-Win^2; %Cross-sectional area [m^2]
volume = A*l; %Volume of bar [m^3]
rho = 8000; %Density [kg/m^3]
weight_bar = rho*volume; %Weight of bar [kg]
tankN = 8; %Number of tanks
tankW = 101; %weight of tank [kg]
weight_tank = tankW*tankN; %Total tank weight [kg]
weight = weight_tank+weight_bar; %Weight of entire cradle [kg]
shock = 7; %Shock force [g]
g = 9.81; %Gravity [m/s^2]
sf = 5; %Safety factor
bolt_d = 0.01967; %Diameter of bolt [m]
tension_str = 39144.35; %Tension strength [N]
shear_str = 49820.082; %Shear yield [N]
%% Calculations
total_force = weight*g*shock; %Total force [N]
req_bolts_shear = ceil(sf*total_force/shear_str); %Number of bolts needed
req_bolts_tension = ceil(sf*total_force/tension_str); %Number of bolts needed
req_bolts = max(req_bolts_tension, req_bolts_shear);
req_bolts = 12; %Manual input for # bolts to find safety factor
sf_tension = req_bolts*tension_str/total_force; %Safety factor for tensile load
sf_shear = req_bolts*shear_str/total_force; %Safety factor for shear load
fprintf("At least %d bolts are needed to secure the cradle to the concrete",
req_bolts);
fprintf("\nTensile Safety Factor: %.2f\nShear Safety Factor: %.2f\n", sf_tension,
sf_shear);
```

Appendix C.4 - Tank Selection MCDA

```
clear; close all; clc;
%% Data
h2.m = 60;
cowling.l = 3.364;
cowling.w = 1.866;
cowling.h.wall = 1.009;
cowling.h.mid = 1.118;
Criteria = {'Company','SKU','Type','Diameter, mm','Length, mm','Weight,
kg','Capacity, kg','Price Per Tank, CAD',...
   'No. Tanks','Total Price, CAD','Total weight, kg'};
Data = [
   "Luxfer","W150H35", 3, 415, 1614, 73.1, 3.6, NaN;
   "Luxfer","W183H35", 3, 415, 1910, 83, 4.37, NaN;
   "Luxfer","W322H35", 3, 415, 3165, 138, 7.8, NaN;
   "SPEKTRONIC","CFRCYL-III-20L", 3, 230, 650, 7, 0.54, 3850;
   "Rubri","CHG3-370-210-35T/A", 3, 370, 2270, 117, 5.349, NaN;
   "Hefei","", 3, 420, 2210, 115, 5.349, NaN;
   "Qingdao","", 3, 405, 2050, 48, 3.413, NaN;
   "Liaoning","", 3, 380, 1840, 83, 3.566, NaN;
   "Hexagon","H2-35-431X2114", 4, 431, 2114, 67, 4.7, 7500;
   "Hexagon","H2-35-430X3202", 4, 430, 3202, 101, 7.5, 8500;
   "MAHYTEC","RGV500", 4, 480, 3070, 260, 9.4, NaN;
   "Anhui","CHG4-512-330-35-S/A2", 4, 512, 2235, 124, 7.5, NaN;
];
DM = str2double(Data);
DM(isnan(DM)) = 1;
DM(:,end+1) = ceil((h2.m-2)./DM(:,7)); % Number of tanks (-2kg to accomodate
design specs)
DM(:,end+1) = DM(:,end).*DM(:,8); % Total Cost
DM(:,end+1) = ceil(DM(:,9).*DM(:,6)); % Total Weight
RN = compose('A%d',1:size(DM,1));
decision_table =
table(table(Data(:,1),Data(:,2),DM(:,3),'VariableNames',Criteria(1:3)),
array2table(DM(:,4:end),'VariableNames',Criteria(4:end)),'VariableNames',{'Indent
ifier','Data'},'RowNames',RN)
DM = DM(:,4:end);
% Assess which tanks can fit
x = unique(sort(DM(:,1)));
n = [28; 12; 9; 9; 9; 9; 9; 6; 6; 4]; %
https://www.engineeringtoolbox.com/circles-within-rectangle-d_1905.html
canfit = zeros(size(DM,1),1);
for i = 1:size(DM,1)
   if DM(i,6)>n(x==DM(i,1))
       canfit(i) = 0;
   else
       canfit(i) = 1;
   end
end
canfit = logical(canfit);
DM = DM(canfit,7:8); % Eliminate tanks that cannot fit, and only care about total
cost and weight
RN = RN(canfit); % Update rownames vector
% Criteria should include overall tank weight → cradle cost
w = [2, 1]; w = w./sum(w);
w(2,:) = ones(1,size(DM,2));
```

```
%% Analysis
function c = linear_ben(col) % 1
   c = col./max(col);
end
function c = vec_ben(col) % 2
   c = col./sqrt(sum(col.^2));
end
function c = lin_cost(col) % 3
   c = (1./col)./max(1./col);
end
function c = vec_cost(col) % 4
   c = (1./col)./sqrt(sum((1./col).^2));
end
function c = nonmonotonic(col, ideal) % 5
   z = (col-ideal)./std(col);
   c = exp(-0.5.*z.^2);
end
% normdict = [5, 5, 3, 1, 3, 3, 3, 3]; % Normalization method for each criteria
normdict = [3, 3];
idealdict = zeros(1,length(normdict));
% idealdict(normdict==5) = [500, (cowling.l-0.25)*1000]; % Ideal Values
for i_n = 1:2
   if i_n == 2
       normdict(normdict==3) = 4;
       normdict(normdict==1) = 2;
   end
   for i_w = 1:2
       % Normalization
       clear NDM
       for j = 1:size(DM,2)
           switch normdict(j)
               case 1
                   NDM(:,j) = linear_ben(DM(:,j));
               case 2
                   NDM(:,j) = vec_ben(DM(:,j));
               case 3
                   NDM(:,j) = lin_cost(DM(:,j));
               case 4
                   NDM(:,j) = vec_cost(DM(:,j));
               case 5
                   NDM(:,j) = nonmonotonic(DM(:,j), idealdict(j));
           end
       end
       % TOPSIS
       posid = max(NDM,[],1);
       negid = min(NDM,[],1);
       pos_sep = sqrt(sum( ((NDM-posid).*w(i_w,:) ).^2,2));
       neg_sep = sqrt(sum( ((NDM-negid).*w(i_w,:) ).^2,2));
       topsis_g(:, i_n, i_w) = neg_sep./(pos_sep+neg_sep); % Grade
       topsis_r(:, i_n, i_w) = tiedrank(1./topsis_g(:, i_n, i_w)); % Rank
   end
end
results = table(array2table([reshape(topsis_g(:,1,:), size(topsis_g, [1, 3])),
reshape(topsis_g(:,2,:), size(topsis_g, [1, 3]))], 'VariableNames', {'LN UW','LN
EW','VN UW','VN EW'}), ...
   array2table([reshape(topsis_r(:,1,:), size(topsis_r, [1, 3])),
reshape(topsis_r(:,2,:), size(topsis_r, [1, 3]))], 'VariableNames', {'LN UW','LN
EW','VN UW','VN EW'}), ...
```

```
   table(sum(topsis_g, [2, 3]), tiedrank(1./sum(topsis_g, [2, 3])), sum(topsis_r,
[2, 3]), tiedrank(sum(topsis_r, [2, 3])), tiedrank(tiedrank(1./sum(topsis_g, [2,
3]))+tiedrank(sum(topsis_r, [2, 3]))), 'VariableNames',{'Grade Sum','Grade
Rank','Rank Sum','Rank Rank','Overall Rank'}), ...
   'RowNames',RN,'VariableNames',{'Grades','Ranks','Results'})
```

Appendix C.5 - Strap Mount Pressure Calculation

```
%% Strap Mount Pressure Calculation
clear; clc; close all;
%Global Variables
%Input Variables
rad_exp = 0.06; %Radial Expansion
ax_exp = 0.06; %Axial Expansion
tank_d = 430/1000; %Tank diameter [m]
tank_l = 3202/1000; %Tank length [m]
tank_weight = 101; %Tank weight [kg]
strap_w = 0.03; %Strap Width [m]
strap_t = 0.0015; %Strap thickness [m]
bolt_d = 0.00978; %Bolt diameter [m] M10
bolt_l = 0.09; %Bolt length [m]
bolt_tor = 43; %Maximum bolt torque [Nm]
sfric_coef = 0.5; %Static friction coefficient
dfric_coef = 0.5; %Dynamic friction coefficient
tensile_str = 1.2*10^9; %Ultimate tensile strength [Pa]
G_bolt = tensile_str*0.577; %Shear modulus [Pa]
K = 0.2; %Nut factor (Zinc-plated)
grav = 9.81; %Gravity [m/s^2]
g_shock = 7; %Longitudinal force requirement [g]
g_force = g_shock*grav*tank_weight; %Longitudinal shock force [N]
%% Expansion Calculations
exp_d = tank_d * (1+rad_exp); %Find expanded diameter of the tank
exp_l = tank_l * (1+ax_exp); %Find the expanded length of the tank
shape_fact = (exp_d*pi*strap_w)/(2*strap_t*(exp_d*pi+strap_w)); %Shape ...
%factor to determine the structural viability of the rubber
%% Spring Force/Friction Force Calculations
bolt_f = bolt_tor/(K*bolt_d); %Force on the tank from the bolt (clamping force)
fric_f = sfric_coef * bolt_f; %Friction force on the tank from 1 strap
%% Seing if clamping force is sufficient to hold tank in place
if fric_f > g_force
   fprintf("The claping force of one strap is enough to carry %.1fg of
longitudinal shock. \n",g_shock)
else
   straps_needed = ceil(g_force/fric_f);
   fprintf("%d %.1fcm wide straps are needed to carry %.1fg of longitudinal
shock. \n",straps_needed,strap_w*100,g_shock)
end
%% Seeing if bolt will fail
%Bolt Safety Check
bolt_area = 58e-6; % Tensile stress area for M10 [m^2]
bolt_tensile_stress = bolt_f / bolt_area; % Actual tension in the steel [Pa]
% Grade 8.8 Bolt Yield Strength is approx 640 MPa
bolt_limit = 640e6;
sigma_comp = bolt_f/(pi*exp_d*strap_w); %Compresive stress [Pa]
tau = fric_f/(2*pi*(exp_d/2)*strap_w); %Shear stress [Pa]
fos_bolt = bolt_limit / bolt_tensile_stress;
if bolt_tensile_stress > bolt_limit
   error('The bolt will snap!');
else
   fprintf('Bolt is safe. Bolt Stress: %.1f MPa | Bolt Safety Factor: %.2f\n',
bolt_tensile_stress/1e6, fos_bolt);
end
%% Rubber and band Analysis
```

```
% Realistic Material Properties
liner_comp_limit = 15e6;    % 15 MPa (Typical EPDM compression limit)
liner_shear_limit = 2e6;    % 2 MPa (Typical EPDM shear modulus)
band_yield_strength = 500e6; % 250 MPa (304 Stainless Steel)
% 1. Check Rubber
if sigma_comp > liner_comp_limit
   error('Rubber will be crushed!')
elseif tau>liner_shear_limit
   error('Rubber will tear!')
else
   fprintf('Rubber will not tear/break. Shear safety (limit/tau) = %.3f.
Compression safety (limit/sigma) = %.3f.\n', (tau/liner_shear_limit)^-1,
(sigma_comp/liner_comp_limit)^-1);
end
% 2. Check Band Tension
sigma_band = bolt_f /(strap_w * strap_t);
if sigma_band > band_yield_strength
   error('Steel strap will yield/stretch permanently! Safety factor (tension)=
%.3f. \n',band_yield_strength/sigma_band)
else
   fprintf('Band will not deform. Safety factor (tension)= %.3f.
\n',band_yield_strength/sigma_band)
end
%% extra code for spring calculations if needed
%{
arc_angle = deg2rad(30); %angle used for arc length calculations
%for reference 30 degrees gives an arc length of 11.26cm at 0.43m diameter
arc_l = tank_d/2 * arc_angle; %arc length at neutral state
arc_exp_l = exp_d/2 * arc_angle; %arc length while expanded
u = fric_f^2/(4*pi*strap_w*g)*log((exp_d+strap_t)/exp_d); %strain energy (not
needed)
%}
```

Appendix D - Design Specifications Table

Category	Sub-category	Specification Type	Specification	Correlation to Scope, Constraints and Gaps	Evaluation Criteria
Functional	Primary	Must Have	Supports and protects several hydrogen tanks carrying 60±2 kg of hydrogen.	60 kg is the minimum capacity required by the client for the system's energy needs, addressing the core functional requirement.	Minimum 60 kg hydrogen capacity fitting within the approximate locomotive cowling dimensions: 1200×1866×3364 mm or 56.3×73.5×132.3 in.
	Mounting	Must Have	Minimal removal of material from the locomotive.	Minimizing modifications supports the project's goal of retrofitting flexibility and broad appeal across various locomotive types.	Final CAD design must demonstrate the use of zero to minimal new hole drilling or zero welding to the host locomotive chassis, relying exclusively on existing bolt patterns.
	Tank Variation Flexibility	Goal	The mounting system must allow for rapid re-configuration to accommodate standard, commercially available hydrogen tanks of varying diameters.	This flexibility allows the design to be compatible with different tank variations, supporting the broader appeal and low-cost objective by not being locked into a single tank supplier.	CAD model and process plan must demonstrate that the cradle can be reconfigured (e.g., fastener adjustment/replacement) to securely hold a tank with a diameter up to ± 15% from baseline
	Modularity	Goal	Cradle can structurally support a double-stack configuration of tanks.	Addresses the gap in current solutions by supporting modular expandability and flexibility for different tank sizes and configurations (e.g., stacking).	Cradle design must demonstrate via CAD that it can accommodate a double-stack of tanks within the given spatial constraints.
	Physical Deliverable	Goal	Physical scaled-down model of the hydrogen cradle.	Provides better visual representation for client and stakeholder review, aiding in the transition from digital design to physical realization.	3D printed using CAD design with an approximate 1:32 scaling (G-Scale).
	Orientation	Must Have	Fixed: End of the hydrogen storage (refuelling side) must face the cab of the locomotive.	Required client/safety specification for standardized system integration and operation.	Distance to exhaust end from fuel system is less than distance to refuelling end or equidistant.
Performance /Safety	Shock Resistance (Lateral)	Must Have	The cradle tank mounting system must withstand a maximum of 5 g/s of lateral jerk.	Directly addresses the shortcomings of current cradle solutions, which "do not properly address vibration isolation".	The safety factor for shear and tensile deformation must be at least ~1.5 for the straps and rubber liner, 5 for the anchors and the cradle must also satisfy safety margins (maximum displacement < 2.5mm) under the specified 7 g/s load.

Locomotive Hydrogen Tank Cradle

	Shock Resistance (Longitudinal)	Must Have	The cradle and the tank mounting system must withstand a maximum of 5 g/s of longitudinal jerk.	Directly addresses the shortcomings of current cradle solutions, which "do not properly address vibration isolation".	Same as previous
	Shock Resistance (Vertical)	Must Have	The cradle and tank mounting system must withstand a maximum of 3 g/s of vertical jerk.	Directly addresses the shortcomings of current cradle solutions, which "do not properly address vibration isolation".	Same as previous
	Temperature (Minimum)	Must Have	Able to endure a sustained minimum temperature of −32 °C.	Minimum temperature requirement based on the client's specifications for optimal performance in Canadian rail environments.	Able to perform all safety and structural specifications at −32°C (Dependent on material).
	Temperature (Maximum)	Must Have	Able to endure a sustained maximum temperature of 60◦°C.	Maximum temperature requirement based on the client's specifications for optimal performance.	Able to perform all safety and structural specifications at 60°C (Dependent on material).
	Frame Material (Durability)	Must Have	Resistant to rust when subjected to water.	Addresses the key problem of corrosion, which poses serious safety risks.	Frame material must be resistant to corrosion in a humid environment.
	Frame Material Hydrogen Resistance	Must have	Resistant to hydrogen	Addresses the key problem of hydrogen embrittlement, which can greatly weaken a material and make it unpredictable.	Frame material must be resistant to HE and maintain a relative reduction in area of at least 80%.
Maintainability	Tank Replacement Time	Goal	Tanks and fittings can be removed and replaced rapidly using standard tools to minimize downtime.	Directly addresses the maintenance constraint and the need for a non-useless design due to complex maintenance.	Requires ≤2 hours to replace any tank inside a repair shop or ≤8 hours outside of a repair shop, verified by process plan analysis.
	Installation Time	Goal	Ease of installation (alignment and mounting within the cradle space).	Flexible design must be easy to install to support broad adoption and quick retrofitting across various locomotives.	Total time to install the entire cradle assembly must be ≤2 working days, verified by process plan analysis.
	Tooling	Must Have	Maintainable with only existing tools and machinery.	Supports the goal of a low-cost and easily implemented system by eliminating the need for specialized tools for installation, repair, or replacement.	No specialized tools are required to perform installation, repair, or replacement.
	Manufacturability	Goal	Not excessively difficult to manufacture.	Maximizing manufacturability reduces cost and aligns with the need for a cost-effective solution.	Total manufacturing time must be ≤15 working days, estimated via a detailed process plan and BOM.

Locomotive Hydrogen Tank Cradle

Lifespan	Longevity	Must Have	Operational lifespan through durable materials and easily replaceable components.	Addresses the lifespan constraint (10+ years) and supports a cost-effective long-term solution.	No structural failures over 10 years with expected operating conditions.
Monitoring	Shock Sensor	Goal	Supports a shock sensor to enable passive monitoring and detection of damage.	Early detection reduces the risk of hydrogen leak or structural failure. Industry best practice advises enhanced monitoring for hydrogen systems.	Trigger threshold of 5g (collision), depending on the sensor and tank tolerance (to be adjusted post-tank selection).
	Leak Sensor	Goal	Supports a hydrogen leak sensor to enable automatic detection of hydrogen leaks.	Monitoring hydrogen leaks is required to meet legal/environmental regulations and prevent corrosion/safety hazards.	Must detect a hydrogen concentration of ≤2% H2 from a leak at either end of the tank (Flammability limit is ~4% H2).
Economic	Cost	Goal	Cost to manufacture, assemble, etc..	Directly addresses the major client constraint of being low-cost and cost-effective, with room for reasonable adjustments	Total Bill of Materials (BOM) cost, including frame, cowling, tanks, and sensors, must be ≤$100, 000 CAD + ~25% flexibility.

Appendix E: Tanks and Companies

Company	Type of Tank	Part Number	Diameter, mm	Length, mm	Weight	Capacity	Price, USD	Price, CAD
Redriver (USA)	Type 3 & 4	HYFT600L						
Hylium (South Korea)		V130H35	400 mm	1515	62 kg	3.13 kg		
Luxfer	G-Stor Go H2 Type 3	W150H35	415 mm	1614	73.1 kg	3.6 kg		
		W183H35	415 mm	1910	83 kg	4.37 kg		
		W322H35	415 mm	3165	138 kg	7.8 kg		
		GH2690	665.5 mm	2383	176 kg	14.5 kg		
Luxfer	G-Stor Go H2 Type 4 (3 applicable skus)	GH2790	685.8 mm	2306	191 kg	15.3 kg		
		GH271108	685.8 mm	2762	225 kg	19.1 kg		
Forvia (France)	Type 3 & 4							
Hexagon Purus (Canada)	Type 4	H2-35-431X2114	431	2114	67 kg	4.7 kg	7500	10500
	Type 4	H2-35-430X3202	430	3202	101 kg	7.5 kg	8500	11900
Faber Industrie (Italy)	Type 3 & 4							
Worthington Enterprises (Austria)	Type 3							
ILJYN (JAPAN)	type III							
SPEKTRONIC (Singapore)	type III	CFRCYL-III-20L	230mm	650	7kg	20L		
MAHYTEC	4 (500 bar)	RGV500	480mm	3070	260kg	9.4kg		
	4 (350 bar)?							
Steelhead Composites	3	"5000psi Gas Transport Vessel"	343mm	4616		7.4	6000	10500
NPROXX	3							

Locomotive Hydrogen Tank Cradle

Anhui	Type IV	CHG4-512-330-35-S/A2	512	2235	124	7.5		5014.33
	Type IV	CHG4-608-450-35-S/A2	608	2162	167	10.3		7203.68
SPEKTRONIC (Singapore)	type III	CFRCYL-III-20L	230	650	7	0.54	3850	5390
Steelhead Composites	3	"5000psi Gas Transport Vessel"	343	4616	120	7.4	6000	10500
Rubri	Type III	CHG3-370-210-35T/A	370	2270	117	5.349		5367.45
Hefei Sinopower Technologies Co., Ltd.	Type 3		420	2210	115	5.349		3,149.85
Qingdao Forterra Gas Co., Ltd.	Type 3		405	2050	48	3.413		8,474.91
Liaoning Alsafe Technology Co., Ltd.	Type 3		380	1840	83	3.566		6,847.73
Wuxi Daze New Energy Development Co., Ltd	Type 3		585	1010	63	1.579		2,655.48

Appendix F: Decision Matrix

	Identifier			Data							
#	Co.	SKU	Type	D, mm	L, mm	m, kg	Capacity, kg	PPT, $	N	Price	m_{tot},
A1	Luxfer	W150H35	3	415	1614	73.1	3.6	-	17	-	1243
A2	Luxfer	W183H35	3	415	1910	83	4.37	-	14	-	1162
A3	Luxfer	W322H35	3	415	3165	138	7.8	-	8	-	1104
A4	SPEKTRONIC	CFRCYL-III-20L	3	230	650	7	0.54	3850	108	415800	756
A5	Rubri	CHG3-370-210-35T/A	3	370	2270	117	5.35	-	11	-	1287
A6	Hefei	-	3	420	2210	115	5.35	-	11	-	1265
A7	Qingdao	-	3	405	2050	48	3.41	-	17	-	816
A8	Liaoning	-	3	380	1840	83	3.57	-	17	-	1411
A9	Hexagon	H2-35-431X2114	4	431	2114	67	4.7	7500	13	97500	871
A10	Hexagon	H2-35-430X3202	4	430	3202	101	7.5	8500	8	68000	808
A11	MAHYTEC	RGV500	4	480	3070	260	9.4	-	7	-	1820
A12	Anhui	CHG4-512-330-35-S/A2	4	512	2235	124	7.5	-	8	-	992

PPT = Price per tank, N = Number of tanks required, Price = total price of all tanks, m_{tot} = total mass of all tank